Catalogue
Domestic Technology

19/20

150 YEARS

AFRISO

We would be pleased to help you with any questions you may have. You can reach your contact person on +49 7135 102-

Sales group domestic technology

Tank. Heating. Water Technology.

North -121
Centre -169
South -124

Sales group gas analysis

Gas analysis and service instruments

Germany -166

Service and repairs

Hotline -211

www.afriso.com/contact

The catalogue has been presented by:

Dear business partner

Whether you are looking for products for groundwater protection, flue gas monitoring or industrial measuring and control technology solutions for process engineering – the AFRISO range provides proven, competitively priced series products.

The catalogue DOMESTIC TECHNOLOGY covers all products for safety and measuring equipment for heating systems, solutions for energy savings and water technology as well as alarm units, sensors, actuators and smart building systems for wireless building automation.

The catalogue INDUSTRIAL TECHNOLOGY comprises the complete range of high-quality measuring instruments and system solutions for pressure, temperature and level as well as customised, industrial solutions for stationary gas analysis – for your specific industrial application.

The catalogue PORTABLE MEASURING INSTRUMENTS covers certified mobile service measuring instruments for flue gas analysis as well as testing and inspection equipment for maintenance and diagnostics. Ready to be used in any industry.

In addition, we develop and manufacture complex customised products as well as complete system solutions – precisely to your specifications. Going against the general trend, we insist on a high degree of vertical manufacturing integration from our own tool design and construction department all the way to fully automatic assembly machines for electronic components. This makes us fast, flexible and independent.

For us, globalisation is an opportunity to market our products – manufactured in Germany and Europe – on a global scale.

As a medium sized company, we place particular importance on personal contact with you. There are many factors that set AFRISO apart from others – one of them is the people who make up the company. Competent experts provide you with optimum solutions – both technically and economically. And whenever you need it, a well trained team of service experts is at your disposal.

We look forward to a successful cooperation.

Best regards

Matthias Blasinger
Managing Director Sales and Distribution
AFRISO-EURO-INDEX GmbH

How to work with this catalogue	From page IV
AFRISO at a glance	From page VIII
Level indicators and level controllers	From page 3
Level sensors, overfill prevention systems and PTC thermistor level controllers	From page 21
Leak detectors, leak monitoring systems and leak protection linings	From page 43
Alarm units, probes and signalling devices	From page 63
AFRISO Smart Home system: Intelligent alarm units, sensors and actuators with EnOcean® wireless for building automation	From page 89
Equipment for fuel oil storage tanks and oil-carrying pipes	From page 123
Equipment for heating systems, boiler rooms and chimneys	From page 149
Valves and control technology for radiators and hydraulic balancing	From page 219
Equipment for drinking water supply, hot water treatment and rainwater harvesting	From page 269
Mechanical pressure measuring instruments (pressure gauges)	From page 299
Temperature measuring instruments and controllers (thermometers)	From page 337
Appendix – Technical Information	From page 403
Overview portable measuring instruments (BlueLine/CAPBs®)	From page 394
Index	From page 431

Contents and Product Range

Level – Continuous: Mechanical, pneumatic, hydrostatic
Level – Switches: Float 1

Universal withdrawing system with level sensor chain for battery tank facilities, PTC thermistor level sensors for indoor tanks, PTC thermistor level sensors for outdoor tanks, EX-protected PTC thermistor level sensors, level sensor testers, overfill prevention systems with EX and WHG approval, level controllers 2

Leak detectors – sight glass principle, liquid-based leak detectors, vacuum/pressure type leak detectors, tank protection packages, inner linings for fuel oil, diesel, AdBlue® and rainwater, tank room linings 3

WATCHDOG LINE alarm units, leak detectors with probes (PTC thermistor, photoelectric, conductivity), drip pans, gas alarm units for households, domestic/building applications, signalling devices, additional alarm units, gas sensors, test gas units, gas detectors 4

Water valve, water sensors, temperature and pressure measuring instruments, temperature controllers, room temperature sensors, wireless transmitters (temperature/humidity), actuators for radiators, CO_2 sensors, rocker switches, door/window contacts, wireless gateways, mobile apps 5

Mounting accessories, tank fittings, overpressure devices, tank withdrawal systems, anti-siphon valves, tester for anti-siphon valves, pull cord, screw connections, fuel oil filters, filter inserts, automatic fuel oil de-aerators 6

Motorised boiler room vents, draft stabilisers, boiler water low level alarms, thermal safety valves, boiler safety group assemblies, safety valves, connection assemblies for expansion vessels, anti-tamper cap valves, flow meters, mixing valves, heating and solar pump assemblies, bypass valves, air/sludge separators, filling fittings, quick air vents, heating controllers, manifold systems for heating systems, thermal actuators 7

Valves and control technology for hydraulic balancing: Valve bodies with measuring/adjustment function, adjustable dynamic valve bodies, lockshield valves, combination blocks, screw fittings with measuring function, fittings with measuring function, handheld measuring instrument, calculation software, Valves and control technology for radiators: Valve bodies, lockshield valves, combination blocks, thermostat control head 8

Water filters, domestic water system centre, check valves, strainers, boiler safety group assemblies, safety valves, signal anodes, sacrificial anodes, hot water circulation system, circulation lances and controllers, thermal mixing valves, oil tank conversion kits, inner linings for rainwater tanks, rainwater filters, accessories for rainwater harvesting, backup controller kit for rainwater storage tanks 9

Bourdon tube pressure gauges with plastic or copper capillary tube, capsule pressure gauges, differential pressure gauges, accessories for pressure gauges 10

Combined thermometers/pressure gauges with plastic or copper capillary tube, bimetal, standard, air duct, industrial and stainless steel thermometers and gas filled thermometers, combined thermometer/pressure gauges, industrial thermometers, thermostats, safety temperature cut outs, thermostats with housing, resistance thermometers 11

AFRISO service, training, specialised company search, checklists for enquiries, test reports, conversion table for pressure units, information on the Pressure Equipment Directive, certificates, Terms of Delivery 12

How to work with this catalogue

Table of Contents
Our product range covers measuring, control and monitoring technology for domestic, industrial and environmental applications.
This includes products for groundwater protection, flue gas monitoring, efficient use of energy, use of the sun, geothermal and rain as well as a complete range of pressure, temperature and level instruments.
In addition to the products presented in the catalogues, we manufacture special versions to customer specifications.
Please enquire.

Finding information
The catalogue DOMESTIC TECHNOLOGY is divided into 12 chapters. A chapter overview is provided on pages II and III. The blue chapter tabs on the side of the page let you easily find the desired chapter. Each chapter contains a detailed table of contents as well as an overview table and the main features of the products in that chapter to help you find the product page you need fast.
To find products, you can also use the comprehensive index in the appendix.
Usually, all information on a product is contained on one page and cross references guide you to other pages for fast and easy access to additional information such as fact sheets.

Enquiries
To make enquiries as simple as possible and to assist you in gathering all the necessary information, the appendix contains a number of checklists for enquiries, e.g. for pressure gauges, thermometers and level indicators.

Contact persons
Our sales department is divided into three industry-specific sales groups. Please visit www.afriso.de/contact or see the second page of this catalogue for further information on your specific contact person.

Delivery times / stock items
All stock items have part numbers printed in blue in the price lists. Please enquire for the delivery times of non-stock items as they vary greatly depending on the product specifications.

Minimum order quantities / packing units
Many products can be manufactured in small quantities – in many cases, you may even order a single piece.
However, for some items there are minimum ordering quantities or packing units. The price list sections provide the appropriate information.

The product package contains the specified number of products or can be delivered in the specified order quantity

An additional package contains the specified number of products

Small order handling fee / minimum order value
For very small orders with net values below € 100 a handling fee of € 15 will be charged. No other minimum order conditions apply.

Return of goods
Goods can only be returned with return note and only up to 3 months after delivery, minimum value of goods for return is € 100,–. Please enquire for a return note at service@afriso.de. Please note that only standard stock items can be returned; products not available from stock and devices with ATEX approval cannot be returned. For returned stock items we charge 30 % of the price for testing and handling or at least € 40. Shipping costs for returns are to be borne by the customer.

Prices / terms of delivery
Please refer to your local AFRISO representation or get in touch with the AFRISO headquarters for detailed price information and conditions. We will charge a fee of € 10,– per shipment for drop shipping.
Our Terms of Delivery apply (see www.afriso.com or appendix).
This catalogue supersedes all previous versions, including previous prices. All prices subject to change; the catalogue may contain printing errors.

Technical modifications
As we are constantly improving our products, we reserve the right to technical modifications without prior notice.

Copyright
Copyright 2018 by AFRISO-EURO-INDEX GmbH.
No part of the catalogue may be reproduced, copied, distributed, translated or in any other way processed without prior written approval of AFRISO-EURO-INDEX GmbH.

AFRISO quality products
AFRISO quality products are continuously being enhanced and are subject to stringent inspections. Quality labels, approvals and certificates designate special features and application areas of our products. For certificates and manufacturer's declarations, please refer to chapter 12 or the INFOTHEK > Downloads section of www.afriso.com or directly within the product presentation.

All products with the quality label PROOFED BARRIER® are odour-tight. The quality label is awarded by the Fraunhofer-Institut (IVV) in Freising, Germany, exclusively for components that have passed stringent initial and repeat tests.

The Bio-Oil label certifies chemical resistance and guarantees full performance and functionality of the products even if biodiesel, biofuel or additives are used. The percentage shown corresponds to the maximum permissible admixture.

In flood hazard areas, oil must be kept from escaping from oil tank systems as a result of buoyancy, flooding or damage due to floating refuse. All AFRISO products with the label "flood water proof" meet this requirement. See the individual catalogue pages for details on flood water resistance. After a flood, the information provided in the operating instructions must be observed.

Solar components by AFRISO allow for effective use of thermal solar systems in domestic technology. All labelled products are universally applicable and tuned to each other.

The DVGW is the German technical and scientific association for gas and water. The association is concerned with technical and scientific aspects of the supply of gas and water, implements results in the form of the national German DVGW rules and also contributes to DIN, EN and ISO standards. AFRISO products bearing the DVGW label have been tested and approved in compliance with the stringent safety requirements of the DVGW.

PED
DGRL

The PED (Pressure Equipment Directive 2014/68/EU) specifies the requirements for selling pressure equipment within the European Economic Area. Please refer to chapter 10 for further details on our mechanical and electronic pressure gauges.

The European Ecodesign Directive covers Energy-related Products (ErP). It went into force in August 2007 and was implemented in the EU member states as separate legislation. This directive is geared towards increased energy efficiency of electronic equipment in order to reduce the negative impact on the environment, such as CO_2 emission. ErP-Ready means that the electronic equipment bearing this logo complies with this directive.

EnOcean – Green. Smart. Wireless. EnOcean is a battery-less wireless technology which allows for maintenance-free sensor solutions. These sensors deliver data for intelligent networks in buildings and for the Internet of Things. The basic idea behind the innovative EnOcean® technology is driven by a simple observation: Wherever sensors capture measured values, the energy state changes as well. A switch is pressed, the temperature changes or the illuminance varies. These processes provide sufficient energy to transmit wireless signals. www.enocean.com

EnOcean-ready

The label "EnOcean-ready" on the WATCHDOG LINE alarm units indicates that the PCB of the device features a slot for the EnOcean® TCM 320 wireless module. It is sufficient to plug in the wireless module to integrate the device into a smart home system based on EnOcean®.

How to work with this catalogue

AFRISO catalogue DOMESTIC TECHNOLOGY: Clear structure and layout

Table of contents
with tabs to go to the chapter.

Chapter table of contents
with navigation bar to go directly to the product.

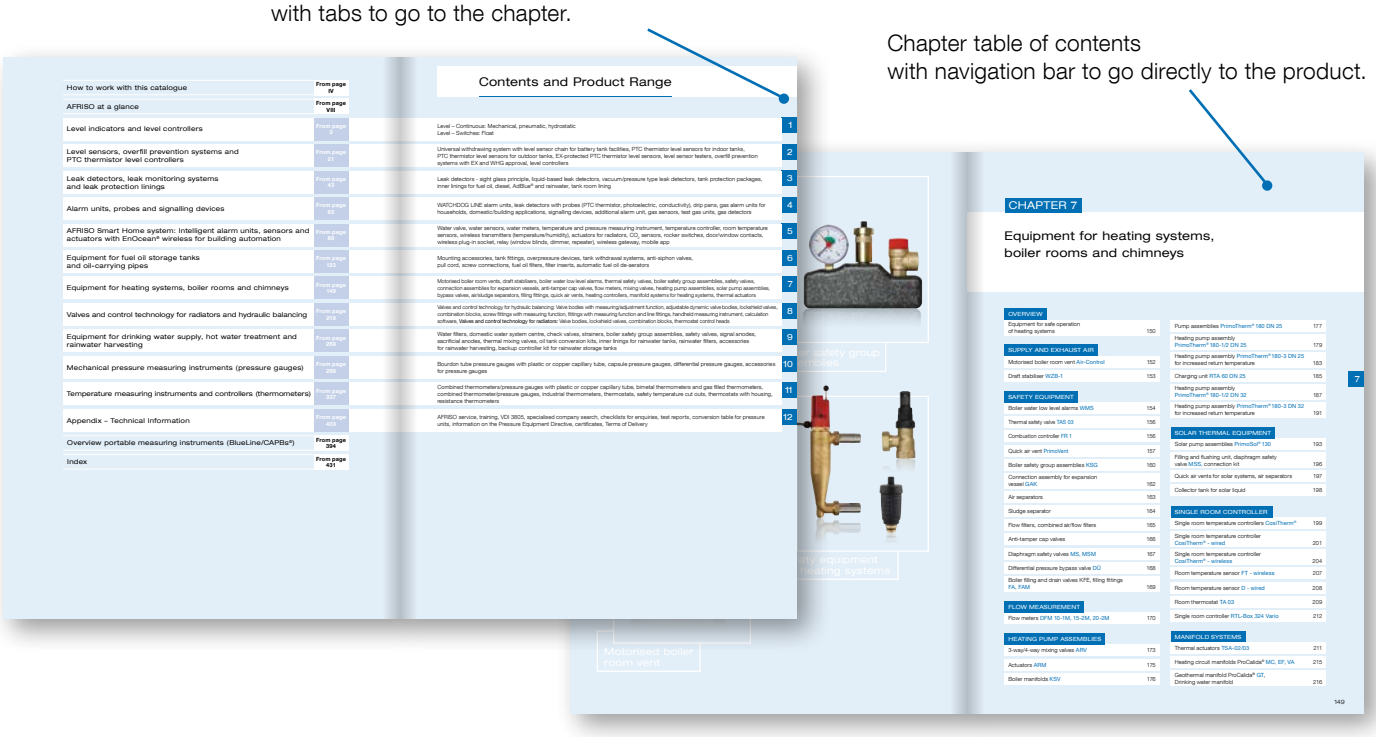

Overview table
to help you make your selection with comparison of product features.

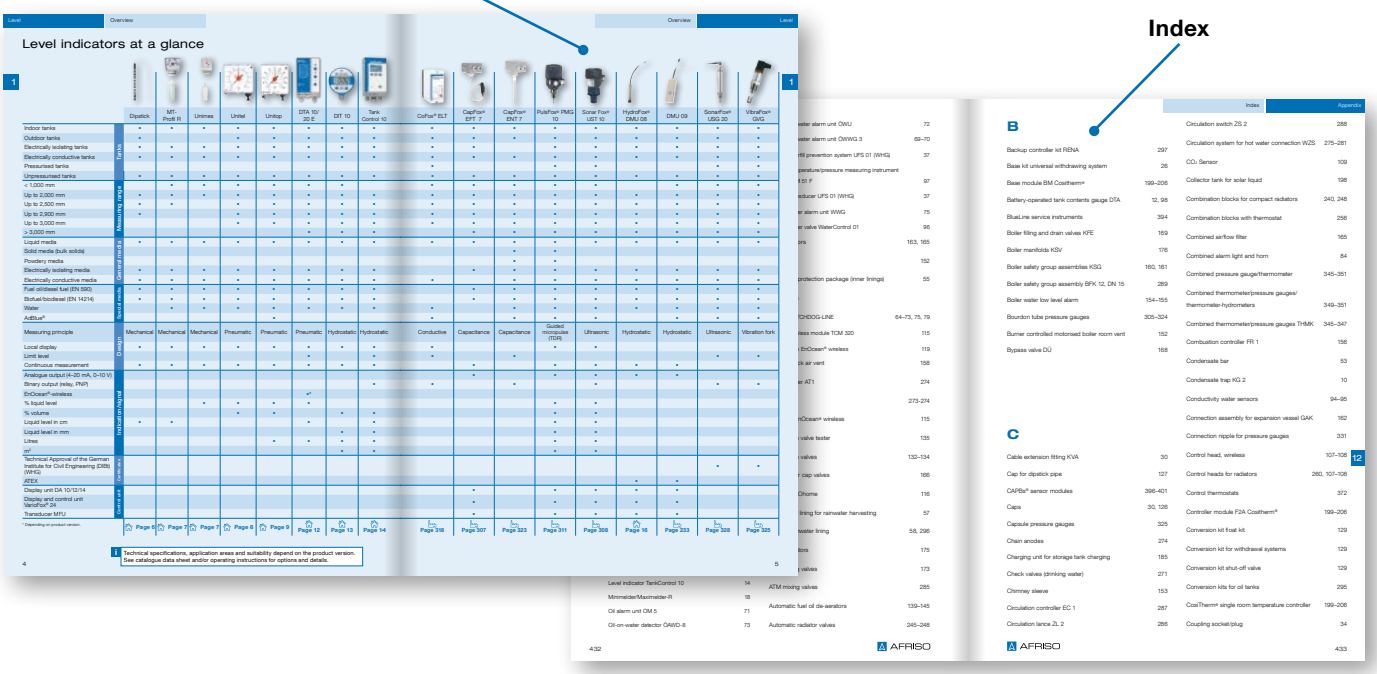

Find the desired product fast:

- Clear user guidance
- Detailed tables of contents
- Overview tables with product features
- Easy-to-find tabs
- Everything at a glance

Tab

Navigation bar organised according to relevant selection criteria for fast orientation even when browsing through the catalogue.

Product advantages and **main benefits**

Appropriate **accessories** with page reference.

Application examples provide a clear picture of the application and available options.

Quality labels provide information about special characteristics or application areas of products.

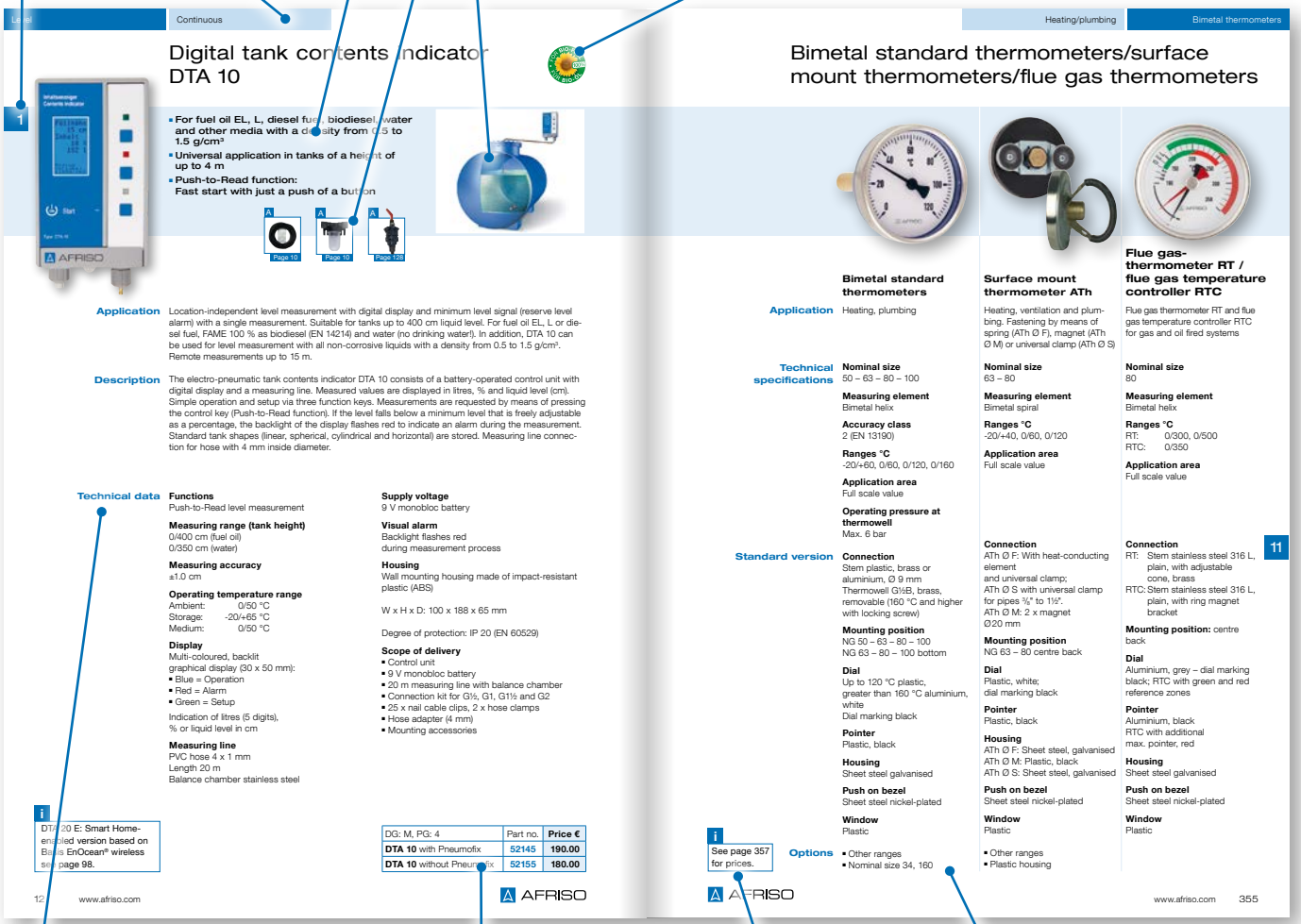

Level | Continuous

Digital tank contents indicator DTA 10

- For fuel oil EL, L, diesel fuel, biodiesel, water and other media with a density from 0.5 to 1.5 g/cm³
- Universal application in tanks of a height of up to 4 m
- Push-to-Read function: Fast start with just a push of a button

Application Location-independent level measurement with digital display and minimum level signal (reserve level alarm) with a single measurement. Suitable for tanks up to 400 cm liquid level. For fuel oil EL, L or diesel fuel, FAME 100 % as biodiesel (EN 14214) and water (no drinking water!). In addition, DTA 10 can be used for level measurement with all non-corrosive liquids with a density from 0.5 to 1.5 g/cm³. Remote measurements up to 15 m.

Description The electro-pneumatic tank contents indicator DTA 10 consists of a battery-operated control unit with digital display and a measuring line. Measured values are displayed in litres, % and liquid level (cm). Simple operation and setup via three function keys. Measurements are requested by means of pressing the control key (Push-to-Read function). If the level falls below a minimum level that is freely adjustable as a percentage, the backlight of the display flashes red to indicate an alarm during the measurement. Standard tank shapes (linear, spherical, cylindrical and horizontal) are stored. Measuring line connection for hose with 4 mm inside diameter.

Technical data

Functions
Push-to-Read level measurement

Measuring range (tank height)
0/400 cm (fuel oil)
0/350 cm (water)

Measuring accuracy
±1.0 cm

Operating temperature range
Ambient: 0/50 °C
Storage: -20/+65 °C
Medium: 0/50 °C

Display
Multi-coloured, backlit graphical display (30 x 50 mm):
- Blue = Operation
- Red = Alarm
- Green = Setup

Indication of litres (5 digits), % or liquid level in cm

Measuring line
PVC hose 4 x 1 mm
Length 20 m
Balance chamber stainless steel

Supply voltage
9 V monobloc battery

Visual alarm
Backlight flashes red during measurement process

Housing
Wall mounting housing made of impact-resistant plastic (ABS)

W x H x D: 100 x 188 x 65 mm

Degree of protection: IP 20 (EN 60529)

Scope of delivery
- Control unit
- 9 V monobloc battery
- 20 m measuring line with balance chamber
- Connection kit for G½, G1, G1½ and G2
- 25 x nail cable clips, 2 x hose clamps
- Hose adapter (4 mm)
- Mounting accessories

DTA 20 E: Smart Home-enabled version based on Bluris EnOcean® wireless set, page 98.

DG: M, PG: 4	Part no.	Price €
DTA 10 with Pneumofix	52145	190.00
DTA 10 without Pneumofix	52155	180.00

12 www.afriso.com

Heating/plumbing | Bimetal thermometers

Bimetal standard thermometers/surface mount thermometers/flue gas thermometers

	Bimetal standard thermometers	Surface mount thermometer ATh	Flue gas-thermometer RT / flue gas temperature controller RTC
Application	Heating, plumbing	Heating, ventilation and plumbing. Fastening by means of spring (ATh Ø F), magnet (ATh Ø M) or universal clamp (ATh Ø S)	Flue gas thermometer RT and flue gas temperature controller RTC for gas and oil fired systems
Technical specifications	**Nominal size** 50 – 63 – 80 – 100 **Measuring element** Bimetal helix **Accuracy class** 2 (EN 13190) **Ranges °C** -20/+60, 0/60, 0/120, 0/160 **Application area** Full scale value **Operating pressure at thermowell** Max. 6 bar	**Nominal size** 63 – 80 **Measuring element** Bimetal spiral **Ranges °C** -20/+40, 0/60, 0/120 **Application area** Full scale value	**Nominal size** 80 **Measuring element** Bimetal helix **Ranges °C** RT: 0/300, 0/500 RTC: 0/350 **Application area** Full scale value
Standard version	**Connection** Stem plastic, brass or aluminium, Ø 9 mm Thermowell G½B, brass, removable (160 °C and higher with locking screw) **Mounting position** NG 50 – 63 – 80 – 100 NG 63 – 80 – 100 bottom **Dial** Up to 120 °C plastic, greater than 160 °C aluminium, white Dial marking black **Pointer** Plastic, black **Housing** Sheet steel galvanised **Push on bezel** Sheet steel nickel-plated **Window** Plastic	**Connection** ATh Ø F: With heat-conducting element and universal clamp; ATh Ø S with universal clamp for pipes ⅜" to 1½". ATh Ø M: 2 x magnet Ø20 mm **Mounting position** NG 63 – 80 centre back **Dial** Plastic, white; dial marking black **Pointer** Plastic, black **Housing** ATh Ø F: Sheet steel, galvanised ATh Ø M: Plastic, black ATh Ø S: Sheet steel, galvanised **Push on bezel** Sheet steel nickel-plated **Window** Plastic	**Connection** RT: Stem stainless steel 316 L, plain, with adjustable cone, brass RTC: Stem stainless steel 316 L, plain, with ring magnet bracket **Mounting position:** centre back **Dial** Aluminium, grey – dial marking black; RTC with green and red reference zones **Pointer** Aluminium, black RTC with additional max. pointer, red **Housing** Sheet steel galvanised **Push on bezel** Sheet steel nickel-plated **Window** Plastic
Options	▪ Other ranges ▪ Nominal size 34, 160	▪ Other ranges ▪ Plastic housing	

See page 357 for prices.

www.afriso.com 355

Clearly structured **product descriptions**, divided into application, description and technical specifications.

Order information table with part numbers, prices and packing unit details plus options/extra charges.

The **Info box** provides you with important information, e.g. about order processing, cross references and much more.

Since the product range is so extensive, we only include the basic versions. Many other variations and versions are available and listed under **Options**.

Technology for environmental protection

AFRISO monitors, controls and protects the elements fire, water, earth and air – in the broadest sense. On the one hand, these elements symbolically stand for the relief and protection of the environment – and on the other, they illustrate our fields of activity:

- Flue gas control
- Energy savings
- Groundwater protection
- Conservation of resources

Product development revolves around our motto "Technology for Environmental Protection". We strive to improve the environment, to make processes which work with greater environmental compatibility and to avoid putting a strain on the environment. With a balanced portfolio of innovations, proven products, systems and services, we offer our customers efficient solutions which are of great benefit.

Tank. Heating. Water Technology.

With a comprehensive range of building technology products, AFRISO prides itself in "Making Heating Systems Safe". Irrespective of whether the heating system uses regenerative energy or fossil fuels. In addition to this extensive range, a large selection of alarm instruments for the fast detection of level, liquid spillage, leakage, gas or smoke is available.

- Mechanical/pneumatic level indicators
- Overfill prevention systems/overfill alarm systems
- Leak detectors/leak monitoring systems
- Inner tank linings
- Equipment for fuel oil storage tanks, oil carrying pipes, boiler rooms, boilers and heating systems
- Heating controllers
- Distribution manifolds for heating, cooling and geothermal systems
- Smart home systems for building automation
- Valves and control technology for radiators and hydraulic balancing
- Equipment for drinking water supply

Gas analysis and service instruments

The BlueLine series is the perfect solution for official measurements, adjustment, servicing, maintenance and repair work. You benefit from an optimally tuned range of measuring instruments which is continuously setting new standards – from basic devices all the way to portable all-in-one flue gas analysers. AFRISO offers gas analysers, gas sampling probes and turnkey analysis systems with data acquisition systems for continuous emission monitoring.

- Portable gas analysers
- Portable measuring instruments, analysers and testers
- Modular sensor module systems
- Gas alarm units
- Stationary gas analysers
- Emission measurement technology
- Measurement data acquisition systems

Pressure. Temperature. Level.

In addition to our comprehensive range of mechanical and electronic pressure, temperature and level instruments, we also offer suitable mounting and installation accessories as well as display, control and evaluation devices.
AFRISO measuring instruments cover the following ranges:
Pressure: 0/2.5 mbar to 0/4,000 bar
Temperature: -50 °C to +1,100 °C
Level: 0/20 cm to 0/250 m

- Pressure gauges
- Accessories for pressure gauges
- Chemical seals
- Pressure transducers
- Bimetal thermometers and gas filled thermometers
- Thermostats
- Resistance thermometers
- Electronic level indicators
- Display, evaluation and control units
- Event reporting systems/communication systems

Special designs and system solutions

In addition to our comprehensive range of standardised, proven off-the-shelf products, we also offer customised special products made exactly to your requirements. We are constantly setting new standards with innovative concepts, e.g. using plastic fittings instead of metal ones or a combination of plastic and brass materials in complex assemblies. Our range does not only cover the delivery of individual sensors, but includes suitable components for power supply and evaluation of the measurement signals. In the case of system solutions, we do the entire engineering for you, all the way to the production of the finished system.

Adapted to your specific requirements

- Housing geometry
- Shape and colour
- Mechanical or electrical connections
- Pre-assembled, tested, ready-to-connect assemblies

Convincing solutions for a wide variety of applications.

We know your industry

AFRISO is at home wherever there is measuring, controlling or monitoring required. As a full-range manufacturer, we offer our customers a broad product portfolio from a single source. A wealth of experience from numerous applications as well as our knowledge of the requirements in the individual markets make us a reliable partner in your industry. We know what is necessary as a result of our many years as a supplier in the OEM business and our intensive contact with standardisation commit-

Building technology

The subject of saving energy has been our focus for more than 50 years. From the start, we have supported the move towards geothermal and solar systems as well as the use of biogenous fuels by supplying professional components and assemblies.
Our range for the secure storage of fuel oil and professional equipment for heating systems reduces operating costs, helps make optimum use of fuels, provides timely warnings if hazardous situations arise and constitutes an active contribution to environmental protection. Innovative measuring instruments for flue gas analysis yield high-precision and reproducible results so that your customers can achieve their goals: the right amount of heat at the right time, low energy consumption and low emissions. And we always respond to sustainable new technologies, for example, be providing compelling sensors and systems for increasing security and convenience in smart homes.

Target markets

- Manufacturer of heat generators
- Manufacturers of solar thermal systems
- System suppliers of panel heating systems
- Tank protection/revision
- Tank manufacturers
- Heating and plumbing system wholesalers
- Electrical wholesalers
- Engineering and planning consultancies
- Smart home and building automation
- Manufacturers of fittings
- Chimney sweeps
- Public institutions, municipalities

tees, associations and guilds. We tap our employees' know-how and expertise in the industry to make our customers' processes simpler, safer and more competitive. In process engineering, in building technology or facilities – you benefit with a strong partner at your side.

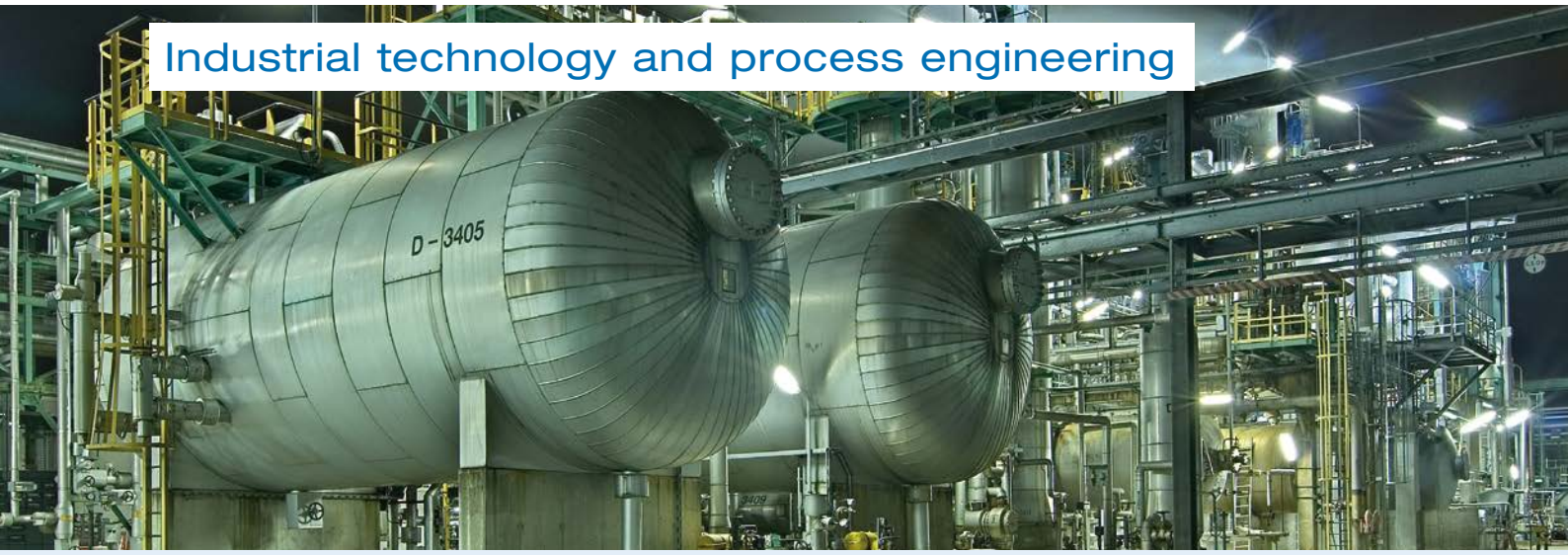

Industrial technology and process engineering

Reliability, precision and a long service life are crucial when it comes to highly automated processes. Our robust measuring devices deliver perfect measurement results and reliably monitor and control simple to highly complex processes – even under the most adverse conditions. AFRISO solutions meet the pertinent directives and standards. Certificates, for example for food-quality materials, explosion protection and resistance to media and temperatures attest to this.

AFRISO products meet the requirements

- Wide variety of process connections
- Large selection of materials
- Compact designs
- Hygienic and easy to clean
- Suitable for CIP and SIP
- FDA-listed materials
- Silicone-free versions
- Resistant to corrosive and abrasive media
- High overload safety
- Resistant to vibration and temperature

Target markets

- Machines and plants
- Tanks
- Food and beverages industry
- Chemical industry
- Pharmaceutical industry
- Cosmetics industry
- Biotechnology
- Refineries
- Offshore industry
- Mineral oil industry
- Raw materials industry
- Hydraulic and pneumatics (fluid engineering)
- Medical technology, safety engineering
- Energy production
- Technical trade

The guarantee for high-quality products.

AFRISO quality

Although we serve an extremely wide variety of markets and industries, all AFRISO employees work according to the same values. Reliability, flexibility and independence are the basis of our day-to-day work.

Our corporate culture is marked by a sense of responsibility. We want our employees to be content here with us. Numerous offers for ensuring an optimum work/life balance and continuous optimisation measures within the framework of the occupational health and safety management system help us show this to the outside world.

At AFRISO, quality is systematically planned and, at every stage of product development and production, managed and monitored. This is attested to by national and international approvals and certificates. Quality Assurance as per ISO 9001 and environmental management in accordance with ISO 14001 are a matter of course for us and implemented in every process.

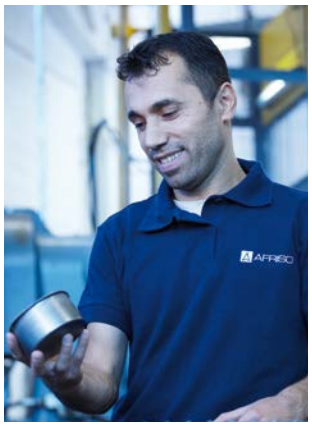

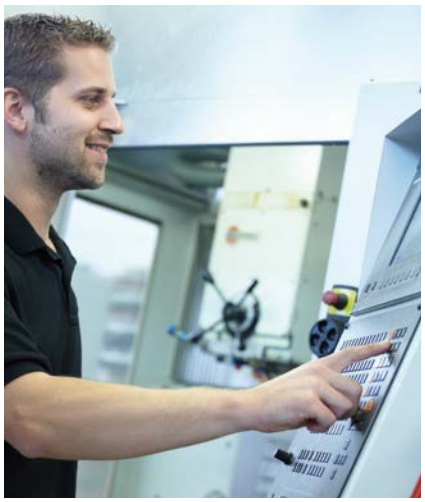

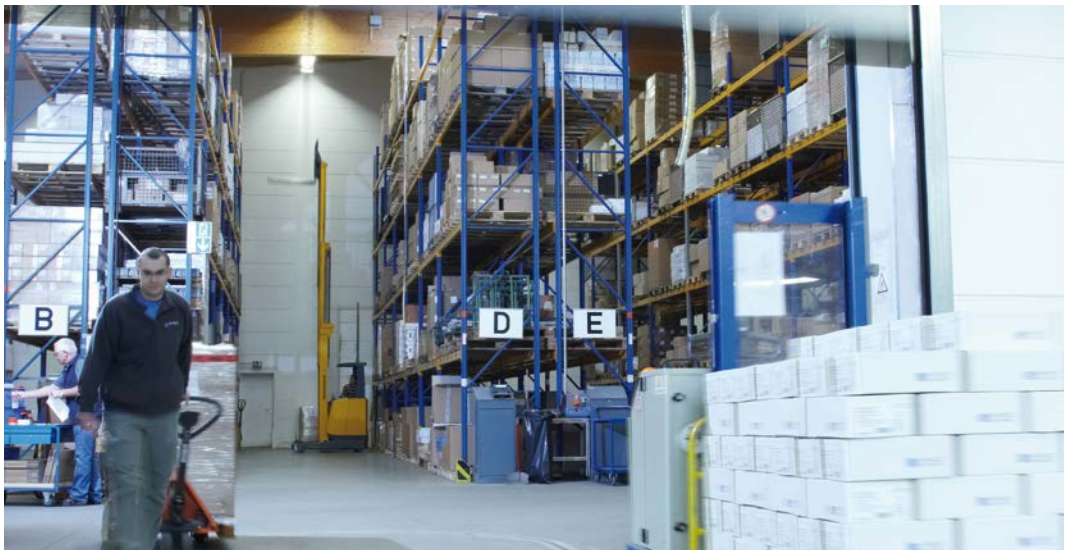

Pareto-Tisch

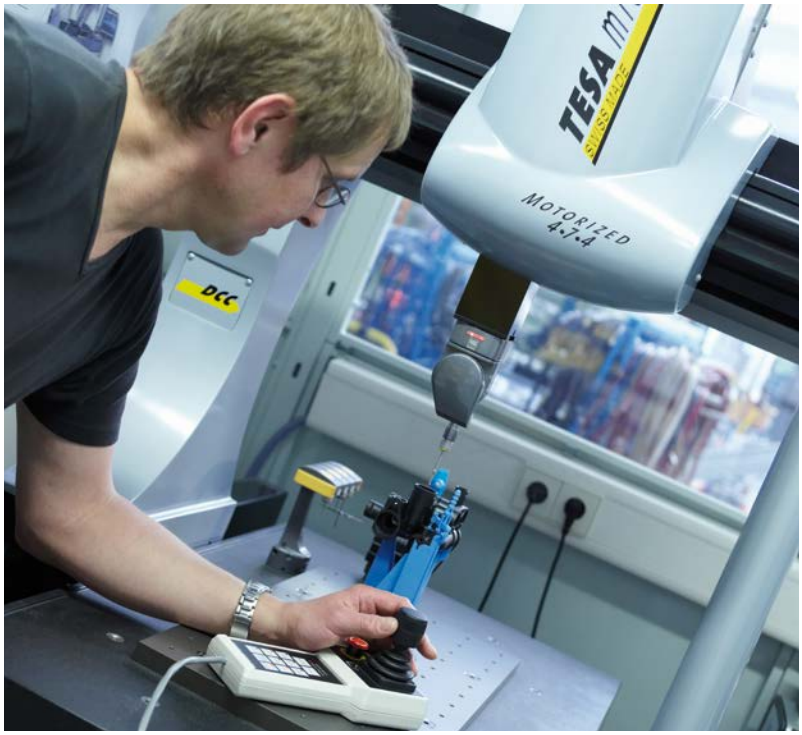
TESA
MOTORIZED
DCC

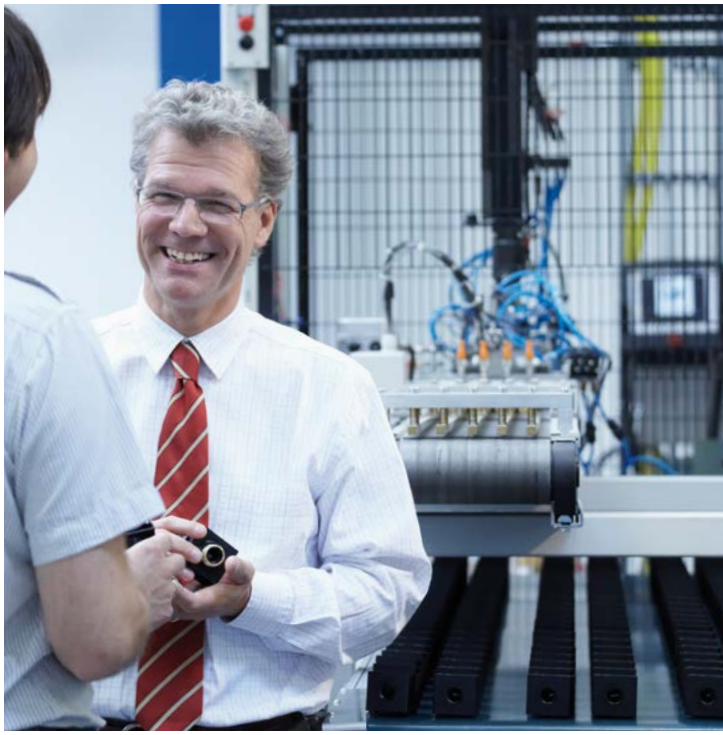

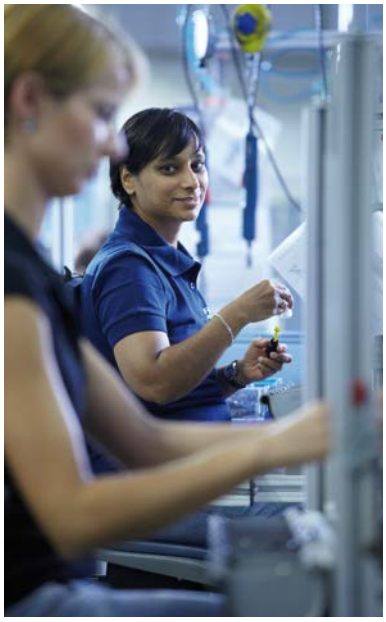

AFRISO support centres – close by, guaranteed.

Sites in Germany

- AFRISO sales office/field staff
- AFRISO production site

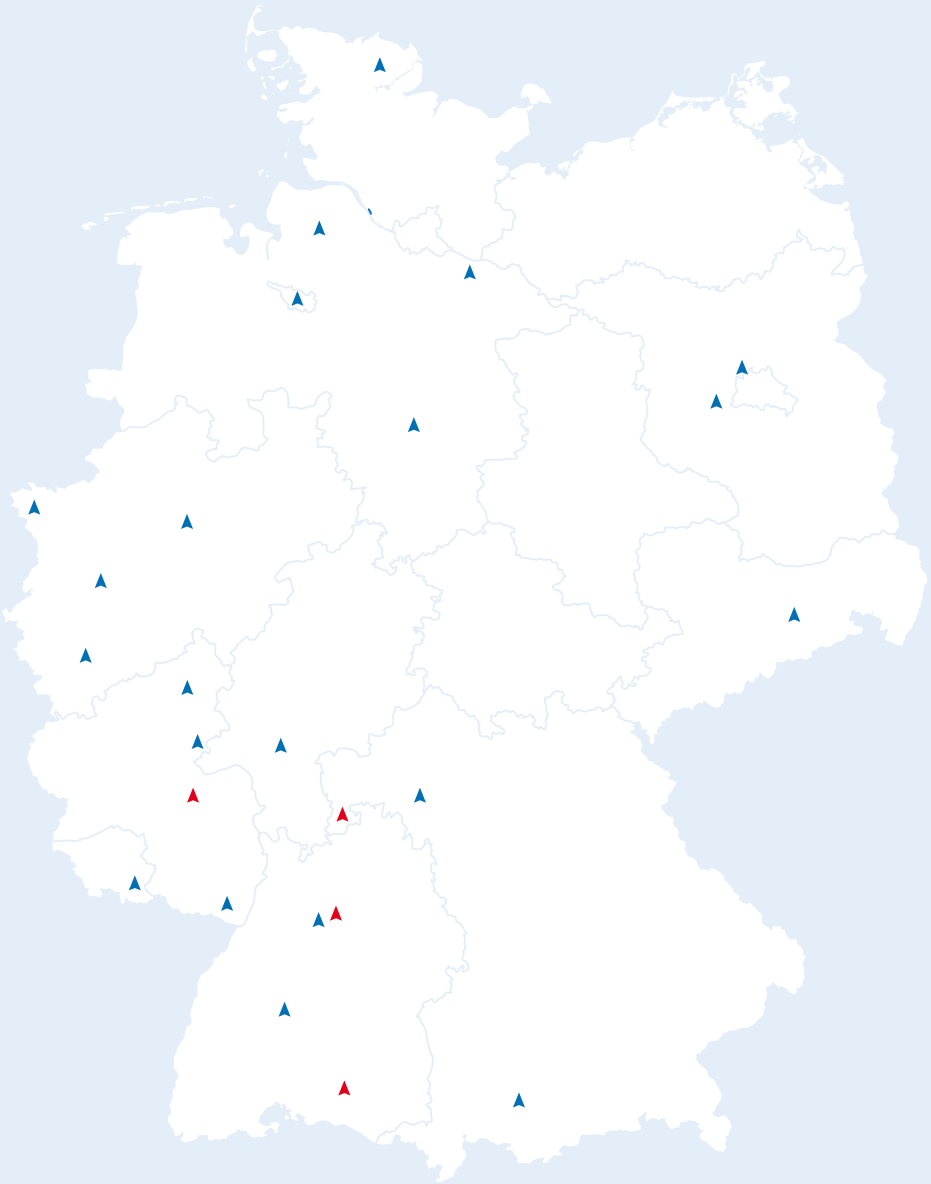

We ensure that you get professional, personal service.

With a staff of more than 80 field and internal experts! Please visit www.afriso.com/contact for further information on your specific contact person.

Business hours:
Monday – Thursday: 7:00 a.m. – 12:00 a.m. and
11:00 p.m. – 4:50 p.m.
Friday: 7:00 a.m.– 12:00 a.m. and
11:00 p.m. – 3:00 p.m.

Stocks and logistics

Maximum availability, short delivery times. Our range comprises more than 25,000 different products. More than 3,000 of them are on stock. A total of more than 1,500,000 individual devices and instruments are available ex stock.

AFRISO production sites in Germany

Headquarters
AFRISO-EURO-INDEX GmbH
Lindenstr. 20
74363 Güglingen
Baden-Württemberg

A staff of more than 550 are at work for you in our four German production sites.

Plant Amorbach
AFRISO-EURO-INDEX GmbH
Friedhofstr. 3
63916 Amorbach
Odenwald/Bavaria

Plant Amorbach – Production of linings
AFRISO-EURO-INDEX GmbH
Von-Stein-Straße 17
63916 Amorbach
Odenwald/Bavaria

Plant Illmensee
Systronik GmbH
Gewerbestr. 57
88636 Illmensee
Lake Constance/Baden-Württemberg

Alsenz plant
GAMPPER GmbH
Niedermoscheler Str. 2
67821 Alsenz
Rhineland-Palatinate

Close, direct customer contact as a result of consistent, international alignment.

On site worldwide for you

A tightly woven network of branches, distribution partners and service centres guarantees optimum consulting and delivery. More than 1,000 AFRISO employees respond to country-specific challenges with close customer contact and individual service on site – worldwide!

AFRISO Group

Headquarters
AFRISO-EURO-INDEX GmbH
Lindenstr. 20
74363 Güglingen, Germany
Tel. +49 7135 102-0
Fax +49-7135-102-147
info@afriso.de
www.afriso.com

VELTA-EUROJAUGE S.A.
17 a rue des Cerisiers
67117 Furdenheim, France
Tel. +33 388 28 23 95
info@groupeafriso.fr
www.afriso.fr

AFRISO-EUROGAUGE Ltd.
Unit 4 Satellite Business Village
GB-Fleming Way, Great Britain
Crawley RH10 9NE
Tel. +44 1293 658360
sales@afriso-eurogauge.co.uk
www.eurogauge.co.uk

EURO-INDEX bvba
607, Leuvensesteenweg
1930 Zaventem, Belgium
Tel. +32 2 7579244
info@euro-index.be
www.euro-index.be

EURO-INDEX B.V.
Rivium 2e straat 12
2909 LG Capelle a/d IJssel
The Netherlands
Tel. +31 10 2888000
info@euro-index.nl
www.euro-index.nl

AFRISO AG
Hauptstr. 31
9434 Au/SG, Switzerland
Tel. +41 71 7443344
office@afriso.ch
www.afriso.ch

AFRISO-EURO-INDEX GmbH
Reichshofstr. 7a
6890 Lustenau, Austria
Tel. +43 5577 83255
office@afriso.at
www.afriso.at

AFRISO IBÉRICA
Crta. Rubí-Sabadell, km 13,
nave 88 A
08191 Rubí (Barcelona), Spain
Tel. +34 9 35 88 12 52
antonio.garcia@afriso.com
www.afriso.com

AFRISO-EURO-INDEX KFT
Kelenföldi út 2.
1115 Budapest, Hungary
Tel. +36 1 2212496
info@afriso.hu

AFRISO spol.s r.o.
Komerční 520
251 01 Nupaky, Czech Republic
Tel. +42 2 72953636
info@afriso.cz
www.afriso.cz

AFRISO SP. Z O.O.
Szalsza/k. Gliwice
ul. Koscielna 7
42-677 Czekanow, Poland
Tel. +48 32 330 33 55
info@afriso.pl
www.afriso.pl

AFRISO-EURO-INDEX SRL
Bd. Tudor Vladimirescu No 45 A
050881 Bucuresti, sect.5,
Romania
Tel. +40 21 4100702
info@afriso.ro
www.afriso.ro

AFRISO EMA AB
Kilvägen 2
23237 Arlöv, Sweden
Tel. +46 40 922050
info@afriso.se
www.afriso.se

AFRISO Ltd.
ul. Zolotorozhsky Val, 11, CTp. 27
Office 225
111033 Moscow, Russia
Tel. +7 495 690 93 87
info@afriso.ru
www.afriso.ru

AFRISO SOUTH AFRICA (PTY) LTD.
P.O. Box 11201
1514 Rynfield, South Africa
Tel. +27 11 914 4520
info@afrisosa.co.za
www.afrisosa.co.za

AFRISO Measurement & Control Technology (Suzhou) Co. Ltd.
Building No. 1,
New-Tech Industrial Park
No. 98 Hengshan Road
215011 Suzhou City, China
Tel. +86 512 6807 9460
info@afriso.cn
www.afriso.cn

AFRISO India Pvt. Ltd.
Unit 17, Electronic Sadan III,
MIDC Bhosari
Pune – 411 026
Maharashtra, India
Tel. +91 202 7129421
nilkanth.jatar@afriso.de
www.afriso.in

AFRISO NORTH AMERICA
2 Homestead Drive
Medway, MA 02053
Tel. +1 508 533-3153
frank.schuldt@afriso.com
www.afriso.com

AFRISO SOUTH AMERICA
Calle Moisés Mendelssohn
No. 290, Of. 201
San Borja – Lima 41, Peru
Tel. +51 1 2232 000
domingo.gutierrez@afriso.com
www.afriso.com

A total of more 1,000 employees Export to 65 countries

- AFRISO production site
- AFRISO branch office
- AFRISO representation
- AFRISO authorised dealer

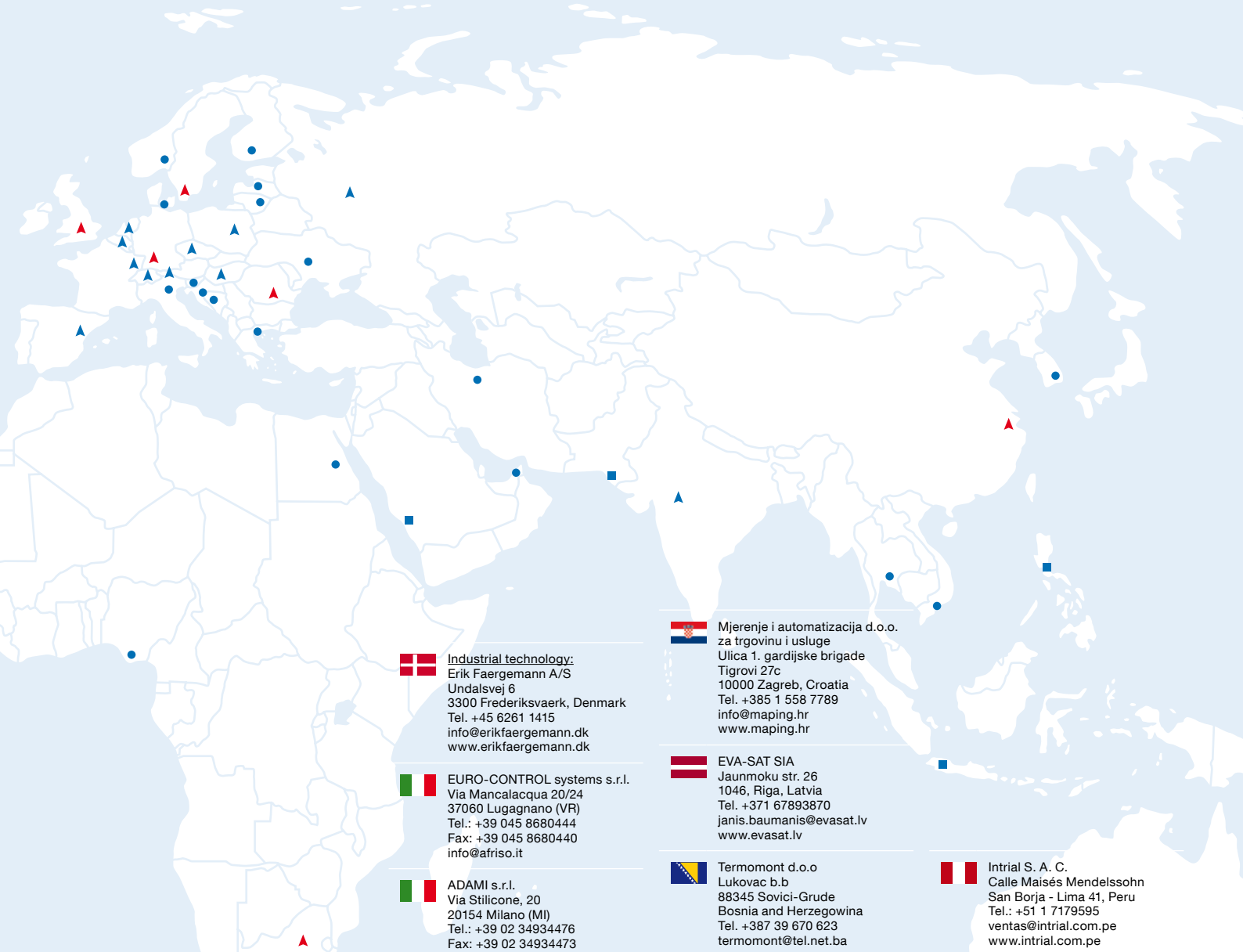

AFRISO representations

Hasvold a.s
Lofthusveien 65
0590 Oslo, Norway
Tel. +47 22 658610
salg@hasvold.no
www.hasvold.no

Lyth-Instrument Oy
Peltosaarenkatu 2
11130 Riihimäki, Finland
Tel. +358 19 760330
kari.jalonen@lyth.fi
www.lyth.fi

Domestic technology:
Power-Flex ApS
Taffelbays Allé 2
2900 Hellerup, Denmark
Tel. +45 39 628787
info@powerflex.dk
www.powerflex.dk

Industrial technology:
Erik Faergemann A/S
Undalsvej 6
3300 Frederiksvaerk, Denmark
Tel. +45 6261 1415
info@erikfaergemann.dk
www.erikfaergemann.dk

EURO-CONTROL systems s.r.l.
Via Mancalacqua 20/24
37060 Lugagnano (VR)
Tel.: +39 045 8680444
Fax: +39 045 8680440
info@afriso.it

ADAMI s.r.l.
Via Stilicone, 20
20154 Milano (MI)
Tel.: +39 02 34934476
Fax: +39 02 34934473
info@adami.it

ELSTAVA Ltd.
J. Kubiliaus g. 16
08236 Vilnius, Lithuania
Tel. +370 5 244 2036
info@elstava.lt
www.elstava.lt

Domestic technology:
TEPLOV LLC
ul. Bielinskovo 54 of 269
220113 Minsk, Belarus
Tel. +375 44 799 01 55
rz@teplovbel.by
www.afrisobel.by

Gas analysis:
EcoTechEnergoService
ul. Melezha 1-222 K.1
220113 Minsk, Belarus
Tel. +375 17 293 31 25
etes.igor@gmail.com
www.etes.by

BRV Ukraine LLC
M. Ushakova Str. 1B
03179 Kyiv, Ukraine
Tel. +38 044 465 66 65
info@afriso.com.ua
www.afriso.com.ua

Mjerenje i automatizacija d.o.o.
za trgovinu i usluge
Ulica 1. gardijske brigade
Tigrovi 27c
10000 Zagreb, Croatia
Tel. +385 1 558 7789
info@maping.hr
www.maping.hr

EVA-SAT SIA
Jaunmoku str. 26
1046, Riga, Latvia
Tel. +371 67893870
janis.baumanis@evasat.lv
www.evasat.lv

Termomont d.o.o
Lukovac b.b
88345 Sovici-Grude
Bosnia and Herzegowina
Tel. +387 39 670 623
termomont@tel.net.ba

FLOGA S.A
23 km Thessaloniki - Poligiros
57006 Lakkia Vasilika, Greece
Tel. +30 239 602 3633
info@floga-sa.gr

Automation Engineering Co. Ltd
No. 19, First Street, Bokharest Ave.
Postal-Code: 15136-38313
Tehran, Iran
Tel. +98 21 8872 2520 21
info@aec.co.ir
www.aec.co.ir

EMS Engineering for
Measurement Systems
10, Mohandeseen Askareen
Naser City, 11371 Cairo, Egypt
Tel. +20 2 24041672
info@ems-egypt.com
www.ems-egypt.com

Netsach Nigeria Limited
5b Jo'babs Dare Close, Off
Adeyeri Close, Off Opebi, Ikeja
Lagos, Nigeria
Tel. +234 1 3450157
info@netsachng.com
www.netsachng.com

Intrial S. A. C.
Calle Maisés Mendelssohn
San Borja - Lima 41, Peru
Tel.: +51 1 7179595
ventas@intrial.com.pe
www.intrial.com.pe

Crest Solutions FZE
Po. Box. 514080
SAIF-ZONE, Sharjah
United Arab Emirates
Tel.No. +971-6-5730420
sales@crestsolutions-me.com

U-Thong Co. Ltd.
413, 415, 417 Petchkaseam Rd.
Kwangnong-Kangplu, Nongkeam
Bangkok
10160 Thailand
Tel. +66 2808 8571
sales@u-thong.com
www.u-thong.com

Phat Dat Trading Eng. Co.
Ward 13, Bink Thanh District
No. 41/96/18, St. Backbone
Ho Chi Minh City, Vietnam
Tel. +84 08355 31725
info@phatdatcompany.com
www.phatdatcompany.com

NMT Co., LTD.
26B 4L Jinjang-Dong, Buk-gu
Ulsan, Korea
Tel. +052 283 1922
nmt@nmts.co.kr
www.nmts.co.kr

Success for more than 150 years.

Tradition and innovation perfectly in tune

Jürgen and Elmar Fritz,
great-grandsons of the company founder

In 1869, our great-grandfather Adalbert Fritz founded his company in Thuringia. When his son Franz Fritz, our grandfather, entered the company, the company name changed to "Adalbert Fritz & Sohn". AFRISO became a globally renowned brand for temperature and pressure measurement. For 50 years, the company focussed on glass thermometers, medical glass instruments and laboratory equipment; then, a small, thin-walled, circular and concentrically shaped metal sheet completely changed the AFRISO world in the 1920s. Two diaphragm half shells form a capsule element which expands or contracts depending on the pressure. This pioneering invention became the foundation for a host of innovative products: Precision pressure gauges, blood pressure measurement instruments and temperature controllers became the most important products for the time up to 1945 and the new beginning after that.

After World War II, Franz Fritz and his son Georg, our father, rebuilt the company in Kleingartach and in Güglingen in Württemberg. The capsule element was used in pneumatic level indicators which marked our entry to the fuel oil market. Back then, we developed overfill prevention systems and leak monitoring systems for the safe storage of mineral oil products, and technologies for environmental protection become the credo and mission for the future product portfolio. AFRISO secured the market leadership in this sector. Product development revolves around the motto "Technology for Environmental Protection" which is one of the key pillars of our corporate strategy.

Georg Fritz 1922 – 2004

Franz Fritz 1890 – 1968

Adalbert Fritz 1846 – 1918

The early 1960s marked the beginning of the internationalisation of AFRISO. The oil crisis in 1973/1974 triggered the development of a comprehensive range of products for the efficient and environmentally friendly operation of heating systems. In 1972, we pioneered on the market with the first portable flue gas analyser and we have been a key driver in the development of mobile measurement technology ever since.

After the political change in Eastern Europe, subsidiaries were founded in Hungary, Romania, the Czech Republic, Poland, the Ukraine, Russia and China. Today, the AFRISO family comprises 19 branches. Together with more than 20 representations, we offer our customers optimum consulting and superior supplier's reliability all over the globe.

We are now the fourth Fritz generation to lead the company. We are very well aware of the benefits of a medium-sized company with a long tradition of innovation, run by its owners. The value of a handshake still applies in a figurative sense, and this is something everyone can count on – employees, suppliers and customers. For us, the past is not a closed chapter but an incentive to constantly adapt to changing market requirements. After 150 years, we are embracing a promising future, which we would like to shape with trend topics such as "smart home".

Elmar Fritz

Jürgen Fritz

AFRISO milestones

Products for electronic level measurement extend the range for industrial applications.

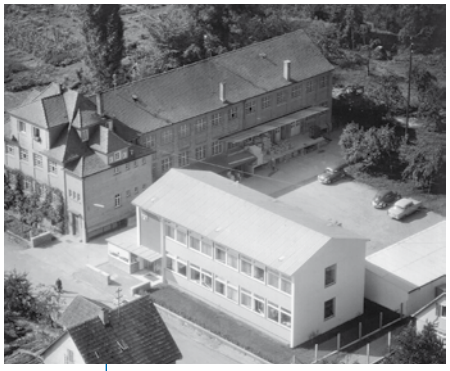

Founding of sales and production companies in Western Europe. AFRISO renamed AFRISO-EURO-INDEX.

The future lies in the economical and environmentally compatible operation of heating systems. AFRISO launches a broad product portfolio on the market.

Company founded by Adalbert Fritz. Production of glass thermometers, glass instruments and laboratory equipment.

Rebuilding of the company in Kleingartach and Güglingen/ Württemberg by Franz Fritz and son Georg Fritz.

1869 1920 1950 1955 1958 1960 1972 1974

A new era begins: Production of capsule elements as the basis for precision pressure gauges, blood pressure measurement devices and temperature controllers.

Market launch: Level indicators for fuel oil tanks. This is followed by overfill prevention systems and leak monitoring systems for the safe storage of oil products.

Market launch of the first portable electronic flue gas analyser.

Integration of SYSTRONIK into the corporate group. Measuring instruments for the industry and the environment are combined in a new division.

Market launch: Product portfolio for solar thermal systems.

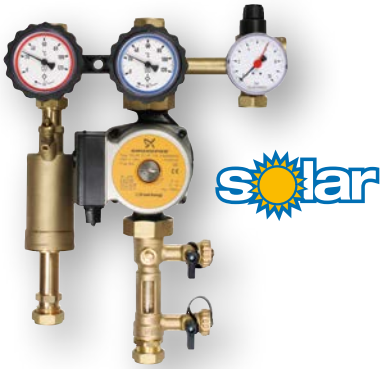

Future-orientated: The Stationary Gas Analysis division engineers and implements system solutions for emission data acquisition.

Industry focus: Pressure transducer range DMU 02 Vario with high-flexibility connection technology

Internationalisation: Founding of subsidiaries in Eastern Europe and Russia.

1981 1994 1996 2006 2008 2009 2011

Market launch of the first compact manifold made of plastic.

Founding of subsidiaries in South Africa, China, India and South America.

Innovation: AFRISO presents the EUROLYZER ST, the first all-in-one flue gas analyser.

Market launch: Product range for hydraulic balancing

Measurement technology a step ahead: Modular sensor system AFRISO CAPBs® for BlueLine measuring instruments, smartphones and tablets.

Expansion and new brand identity of the AFRISO group

- New company logo launched:

AFRISO

Anniversary year

The family-owned company AFRISO celebrates its birthday.
www.afriso.com/150years

150 YEARS

2012 2014 2016 2017 2019

Wireless AFRISO Smart Home system for building automation.

Turnkey solutions for air pollution control:
New limit value for air pollution control force naval operators to retrofit their vessels with exhaust gas cleaning systems. "Scrubbers" ensure compliance with the limit values – AFRISO emission control systems monitor, document and transfer the values to the vessel's control room.

Catalogue
Domestic Technology
2019/2020

Unitop

TankControl

HydroFox DMU 08

CHAPTER 1

Level indicators and level controllers

OVERVIEW

Level indicators at a glance 4

LEVEL – CONTINUOUS

Dipstick, pipe for dipstick 6

Mechanical level indicators MT-Profil R, Unimes 7

Pneumatic level indicator Unitel 8

Pneumatic level indicator Unitop 9

Mounting accessories for pneumatic level indicators 10

Pneumatic level indicator Unitop-Set AdBlue 11

Digital tank contents indicator DTA 10 12

Digital tank contents indicator for fuel oil, diesel fuel and water DIT 10 13

Hydrostatic level indicator TankControl 10 14

Hydrostatic level indicator HydroFox® DMU 08 16

DISPLAY UNITS

Digital display units DA 10/12/14 17

LEVEL – LIMIT LEVEL

Level switches Minimelder-R, Maximelder-R 18

1

Level indicators at a glance

		Dipstick	MT-Profil R	Unimes	Unitel	Unitop	DTA 10/20 E	DIT 10	Tank Control 10
Indoor tanks	Tanks	•	•	•	•	•	•	•	•
Outdoor tanks		•			•	•	•	•	•
Electrically isolating tanks		•	•	•	•	•	•	•	•
Electrically conductive tanks		•	•	•	•	•	•	•	•
Pressurised tanks									
Unpressurised tanks		•	•	•	•	•	•	•	•
< 1,000 mm	Measuring range		•	•	•	•	•	•	
Up to 2,000 mm		•	•	•	•	•	•	•	•
Up to 2,500 mm		•	•		•	•	•	•	•
Up to 2,900 mm		•			•	•	•	•	•
Up to 3,000 mm					•	•	•	•	•
> 3,000 mm							•	•	•
Liquid media	General media	•	•	•	•	•	•	•	•
Solid media (bulk solids)									
Powdery media									
Electrically isolating media		•	•	•	•	•	•	•	•
Electrically conductive media		•	•	•	•	•	•	•	•
Fuel oil/diesel fuel (EN 590)	Special media	•	•	•	•	•	•	•	•
Biofuel/biodiesel (EN 14214)		•	•	•	•	•	•	•	•
Water			•	•	•	•	•	•	•
AdBlue®						•			
Measuring principle	Design	Mechanical	Mechanical	Mechanical	Pneumatic	Pneumatic	Pneumatic	Hydrostatic	Hydrostatic
Local display		•	•	•	•	•	•	•	•
Limit level							•		•
Continuous measurement		•	•	•	•	•	•	•	•
Analogue output (4–20 mA, 0–10 V)	Indication/signal								
Binary output (relay, PNP)									•
EnOcean®-wireless							•*		
% liquid level				•	•	•	•		
% volume					•	•		•	•
Liquid level in cm		•	•				•		•
Liquid level in mm								•	•
Litres						•	•	•	•
m³								•	•
Technical Approval of the German Institute for Civil Engineering (DIBt) (WHG)	Certificates								
ATEX									
Display unit DA 10/12/14	Control unit								
Display and control unit VarioFox® 24									
Transducer MFU									
		Page 6	Page 7	Page 7	Page 8	Page 9	Page 12	Page 13	Page 14

* Depending on product version.

i Technical specifications, application areas and suitability depend on the product version. See catalogue data sheet and/or operating instructions for options and details.

CoFox® ELT	CapFox® EFT 7	CapFox® ENT 7	PulsFox® PMG 10	Sonar Fox® UST 10	HydroFox® DMU 08	DMU 09	SonarFox® USG 20	VibraFox® GVG
•	•	•	•	•	•	•	•	•
•	•	•	•	•	•	•	•	•
•	•		•	•	•	•	•	•
•	•	•	•	•	•	•	•	•
•			•	•			•	•
•	•	•	•	•	•	•	•	•
•	•	•	•	•		•	•	•
•	•	•	•	•	•	•	•	•
•	•	•	•	•	•	•	•	•
•	•	•	•	•	•	•	•	•
	•	•	•	•	•	•	•	•
•	•	•	•	•	•	•	•	•
		•	•					
		•	•					
	•	•	•	•	•	•	•	•
•		•	•	•	•	•	•	•
	•	•	•	•	•	•	•	•
	•	•	•	•	•	•	•	•
•		•	•	•	•	•	•	•
•		•	•	•		•	•	•
Conductive	Capacitance	Capacitance	Guided micropulse (TDR)	Ultrasonic	Hydrostatic	Hydrostatic	Ultrasonic	Vibration fork
•			•	•				
•		•					•	•
	•		•	•	•	•		
	•		•	•	•	•		
•		•		•			•	•
			•	•				
			•	•				
			•	•				
			•	•				
			•	•				
							•	•
					•	•		
	•		•	•	•	•		
	•		•	•	•	•		
	•		•	•	•	•		
Page 318	Page 307	Page 323	Page 311	Page 308	Page 16	Page 233	Page 328	Page 325

Dipstick, pipe for dipstick

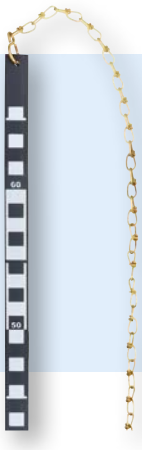

Plastic dipstick

Application

For manual level measurement, primarily in cylindrical underground tanks. Suitable for the following media: fuel oil and diesel fuel.

Description

Dipstick made of flexible, break-proof plastic with 100 cm brass chain. Excellent readability due to cm graduation.

Technical specifications

Material
Plastic

Measuring ranges (tank height) / dipstick length
160 cm / 170 cm
200 cm / 210 cm
250 cm / 260 cm
290 cm / 300 cm

Pipe for dipstick

For suspension in 1" pipe. Protects inner tank linings and coatings against damage caused by the dipstick.

Pipe for dipstick, crimped at one end, closed at the other end. Various lengths available, suitable for AFRISO dipsticks.

Material
Steel, galvanised

Connection

Pipe for dipstick	Dipstick
Length 160 cm	Length 170 cm
Length 200 cm	Length 210 cm
Length 250 cm	Length 260 cm
Length 290 cm	Length 300 cm

Cap for pipe for dipstick with connection thread G1 female, zamak

DG: G	PG			Part no.	Price €
Plastic dipstick:					
Length 170 cm, measuring range 160 cm*	1	1	-	**20010**	
Length 210 cm, measuring range 200 cm*	1	1	-	**20011**	
Length 260 cm, measuring range 250 cm*	1	1	-	**20012**	
Length 300 cm, measuring range 290 cm*	1	1	-	**20013**	
Cap for pipe for dipstick G1 female x G1¼	2	1	140	**20464**	
Pipe for dipstick 160 cm*	3	1	-	**71315**	
Pipe for dipstick 200 cm*	3	1	-	**71320**	
Pipe for dipstick 250 cm*	3	1	-	**71330**	
Pipe for dipstick 290 cm*	3	1	-	**71335**	

*Extra shipping charges apply for dipsticks and pipes for dipsticks (all lengths).

Mechanical level indicators

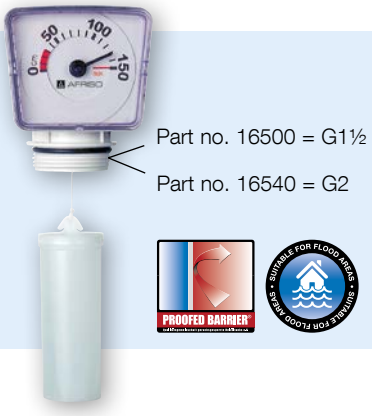

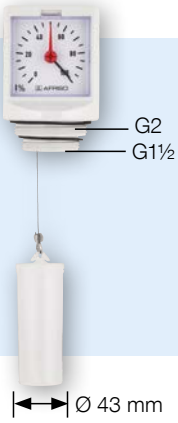

MT-Profil R – G1½ and – G2

Application

For continuous level measurement in tanks containing fuel oil EL, diesel fuel, biodiesel and water. For tanks heights from 0 to 250 cm. Suitable for use in flood hazard areas.

Description

Universal, mechanical level indicator with plastic planetary gear. Measuring range is adjustable from 0 to 250 cm by reversible scale.

With reversible scale 0–150 cm and 0–250 cm for fast adaptation to the tank height. Odour-tight. Watertight up to 10 m water column.

Technical specifications

Measuring range (tank height)
0/150 to 0/250 cm

Displayed values
0/150 or 0/250 liquid level in cm

Connection thread
G1½ or G2

Housing/float
Display: ABS, impact-resistant
Float: PE-HD

Unimes

For continuous level measurement in tanks containing fuel oil EL, diesel fuel, biodiesel and other low-viscosity media which do not attack materials of the indicator. For tank heights from 900 to 2,000 mm.

Universal mechanical level indicator with fully adjustable brass and nickel silver movement. The pointer deflection amounts to 280° at tank heights and diameters from at least 900 mm to 2,000 mm maximum. The contents is indicated in % liquid level. With reference pointer for consumption monitoring.

Measuring range (tank height)
0/900 to 0/2,000 mm

Displayed values
0/100 % liquid level

Connection thread
G1½ and G2

Housing/float
Display: ABS, impact-resistant
Window: SAN
Float: PE-HD

DG: G, PG: 1			Part no.	Price €
Unimes	1	-	**11500**	
MT-Profil R – G1½	1	50	**16500**	
MT-Profil R – G2	1	50	**16540**	
Reducer G2 x G1½	10	-	**20903**	

i
See page 10 for suitable reducers.

Pneumatic level indicator Unitel

1

- No power supply required
- Reference pointer for easy consumption monitoring
- Zero correction possible
- For remote measurements up to 50 m

A Page 10

A Page 10

A Page 128

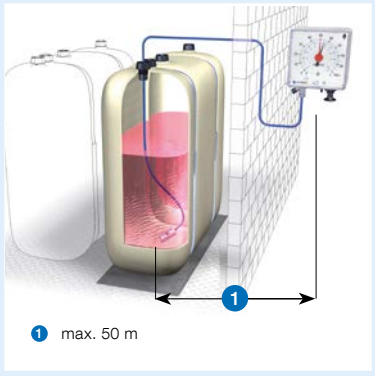

1 max. 50 m

Application

For continuous level measurement in tanks containing fuel oil, diesel fuel and rainwater. For tank heights from 900 to 3,000 mm (depends on version). Suitable for use in flood hazard areas and for remote measurement up to 50 m.

Description

Universal, pneumatic level indicator with capsule movement. The tank height is fully adjustable. Measuring accuracy ±3 % of full scale value. A dual scale facilitates measurements in rectangular tanks (= linear tanks) and cylindrical tanks. Indication in % volume (Unitel) or % liquid level (Unitel for water). Impact-resistant plastic housing for wall mounting. With zero correction and integrated over-pressure safety device. Reference pointer for easy consumption monitoring. Connection for pipe or hose (6 mm outside diameter, universal) for tight mounting of the measuring line (e.g. Pneumofix). Watertight up to 10 m water column.

Technical specifications

Medium
Fuel oil or diesel fuel (density = 0.84 g/cm³) or water (density = 1 g/cm³) for Unitel for water

Measuring range (tank height)
0/3,000 mm (part no. 72500, fuel oil)
0/2,500 mm (part no. 72511, water)

Measuring accuracy
±3 % of full scale value

Operating temperature range
Ambient: -5/+55 °C

PVC hose (accessory)
For measuring line extension. 20 m PE measuring line 4 x 1 mm with hose extension piece

Scale (displayed values)
Unitel: Dual scale 0/100 % volume
Outer for rectangular tanks,
inner for cylindrical tanks
Unitel for water: 0/100 % liquid level

Housing
Wall mounting housing made of impact-resistant plastic with integrated hand pump
W x H x D 145 x 135 x 65 mm

DG: G, PG: 1			Part no.	Price €
Unitel for fuel oil storage tanks	1	-	**72500**	
Unitel for water storage tanks	1	-	**72511**	
Accessories				
PVC hose ø 4 x 1 mm, 20 m	1	-	**20696**	
Hose connector 4 x 4 mm	1	-	**43945**	

i See chapter 9 for more products for rainwater harvesting.

Pneumatic level indicator Unitop

- No power supply required
- Consumption monitoring with date indication
- Zero correction possible
- Sturdy brass connector for reliable and tight installation of the measuring line
- For remote measurements up to 50 m

Page 10

Page 10

Page 128

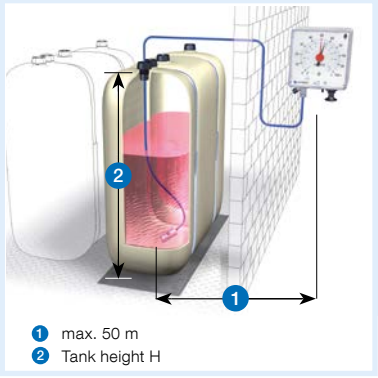

1 max. 50 m
2 Tank height H

Application

For continuous level measurement in tanks containing fuel oil and diesel fuel. For tank heights from 900 to 3,000 mm (depends on version). Suitable for use in flood hazard areas and for remote measurement up to 50 m.

Description

Universal, pneumatic level indicator with capsule movement. The tank height is fully adjustable. Measuring accuracy ±2 % of full scale value. A dual scale facilitates measurements in rectangular tanks (= linear tanks) and cylindrical tanks. The basic version indicates % of volume so that it is independent of the tank shape. Impact-resistant plastic housing for wall mounting. With zero correction at the front side, reference pointer and date indication for easy consumption monitoring; with integrated overpressure device. The mechanism carrier of extremely rugged plastic is separated from the housing for stable zero point and high measurement accuracy. Sturdy brass connector with pressure screw for pipe or hose (Ø 6 mm) for tight monitoring of the measuring line. A vent screw, integrated in the connector, allows you to check the zero setting of the pointer. Watertight up to 10 m water column.

Technical specifications

Medium
Fuel oil or diesel fuel (density = 0.84 g/cm³)

Measuring range (tank height)
0/900 to 0/3,000 mm (part no. 28000)

Measuring accuracy
±2 % of full scale value

Operating temperature range
Ambient: -5/+55 °C
Storage: -5/+55 °C

Scale (displayed values)
Dual scale 0/100 % volume
Outer for rectangular tanks,
inner for cylindrical tanks

Housing
Wall mounting housing made of impact-resistant plastic with integrated hand pump
W x H x D: 155 x 166 x 73 mm

Scope of delivery
Level indicator with connection kit and screws, litre scales for cylindrical tanks 3,000/5,000, 7,000/10,000, 16,000/20,000

i
See page 11 for Unitop for AdBlue®.

DG: G, PG: 1			Part no.	**Price €**
Unitop 3000	1	-	**28000**	

Mounting accessories pneumatic level indicators

Pneumofix type 2

Description Complete, universal mounting kit for pneumatic level indicators. Can be used for tanks of up to 4,000 mm in height or diameter. Consisting of screw fitting with dual thread G½ and G1, reducer G1 x 1½ x 2. Standpipe in tank with balance chamber. PVC measuring line, 17 m. Hose clamps and steel nails, hose extension piece. Suitable for use in flood hazard areas. Watertight up to 10 m water column. If no connection socket is available at the tank, it is recommended to use Euroflex (see page 128).

Pneumofix

PVC hose Ø 4 x 1 mm

Description For extending the measuring line of pneumatic level indicators.
Consisting of: 20 m PE measuring line 4 x 1 mm with hose extension piece. Suitable for use in flood hazard areas. Watertight up to 10 m water column.

PVC hose incl. mounting accessories

Condensate trap KG 2

Description For protection of pneumatic level indicators against condensate. Made of high-grade, impact-resistant plastic. The condensate trap can be easily unscrewed for emptying. Universal connections for hose or pipe with 6 mm outside diameter. Suitable for use in flood hazard areas. Watertight up to 10 m water column.

Scope of delivery:
KG 2, incl. mounting material (screws, screwed connections)

Condensate trap KG 2

Reducers/adapters

Description **Reducer 2 x 1½**
Reducer G2 x G1½ made of grey plastic (ABS).

Reducer 1½ x 1
Reducer G1½ x G1 made of grey plastic (ABS).

Description **Flange adapter for battery tanks**
Flange adaptor G1½ made of grey plastic (ABS).

Description **Mounting kit for battery tanks**
For mounting Unitel, Unitop or DTA in case of all process connections are taken.

Reducers

Mounting kit

Flange adapter

DG: G, PG: 1	RK			Part no.	**Price €**
Pneumofix type 2	G	1	-	**20142**	
PVC hose Ø 4 x 1 mm, 20 m, incl. mounting accessories	G	1	-	**20696**	
Hose connector 4 x 4 mm	G	1	-	**43945**	
Condensate trap KG 2	G	1	5	**20320**	
Reducer 2 x 1½	G	10	-	**20903**	
Reducer 1½ x 1	G	10	-	**20905**	
Flange adapter	G	1	-	**20900**	
Mounting kit for battery tanks	M	1	-	**52154**	

Pneumatic level indicator for AdBlue® – Unitop-Set AdBlue

- **Specially calibrated for AdBlue®**
- **Universally adjustable**
- **Easy installation**
- **Complete with special mounting kit**
- **No power supply required**

A
Page 10

Pneumofix type 2

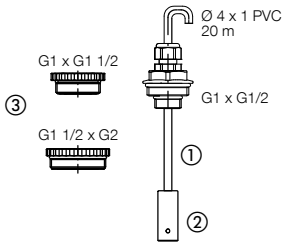

① PVC hose
② Bottom part Stainless steel
③ Reducers

Application

For continuous level measurement in tanks containing AdBlue® (density 1.09 g/cm3). For tank heights from 700 to 2,300 mm. Suitable for use in flood hazard areas and for remote indication up to 50 m. The term AdBlue® is the same as "NOx Reducing Agent AUS 32" and "Urea solution 32.5 %".

Description

Universal, pneumatic level indicator with capsule movement. Specially adjusted to the specific weight (density) of AdBlue® = 1.09 g/cm³. Fully adjustable from 700 to 2,300 mm tank height. Measuring accuracy ±2 % of full scale value. Indication in percentage of level. With zero correction at the front side, reference pointer and date indication for easy consumption monitoring; with integrated overpressure safety device. Universal measuring line connection for pipe or hose with an outside diameter of 6 mm. Easy mounting by means of a mounting kit specially designed for AdBlue®. Process connection G1 and G1½, standpipe PVC 2.5 m with stainless steel balance chamber, 10 m measuring line PVC 4 x 1 mm, reducer G1 x G1½ x G2. Watertight up to 10 m water column.

Technical specifications

Measuring range
0/700 to 0/2,300 mm tank height

Measuring accuracy
±2 % of full scale value

Operating temperature range
Medium: 0/35 °C
Ambient: -5/+55 °C
(Please observe the pertinent regulations concerning the storage of AdBlue®!)

Scale (displayed values)
0/100 % liquid level

Housing
Wall mounting housing made of impact-resistant plastic with integrated hand pump
W x H x D 155 x 166 x 73 mm

Process connection
G½ and G1, reducer G1 x G1½ x G2

Standpipe
Plastic PVC
Length 2.5 m balance chamber stainless steel

Measuring line
PVC hose 4 x 1 mm
Length approx. 17 m

Scope of delivery
Level indicator, mounting kit and reducers G2 x G1½ as well as G1½ x G1

i

Make sure to observe all pertinent legislation concerning selection of materials and construction when building storage facilities for AdBlue®.

See chapter 2 for suitable overfill prevention system and chapter 3 for inner tank linings.

DG: G, PG: 1			Part no.	**Price €**
Unitop-Set AdBlue	1	-	**28040**	

Digital tank contents indicator DTA 10

1

- **For fuel oil EL, L, diesel fuel, biodiesel, water and other media with a density from 0.5 to 1.5 g/cm³**
- **Universal application in tanks of a height of up to 4 m**
- **Push-to-Read function: Fast start with just a push of a button**

A Page 10
A Page 10
A Page 128

Application

Location-independent level measurement with digital display and minimum level signal (reserve level alarm) with a single measurement. Suitable for tanks up to 400 cm liquid level. For fuel oil EL, L or diesel fuel, FAME 100 % as biodiesel (EN 14214) and water (no drinking water!). In addition, DTA 10 can be used for level measurement with all non-corrosive liquids with a density from 0.5 to 1.5 g/cm³. Remote measurements up to 15 m.

Description

The electro-pneumatic tank contents indicator DTA 10 consists of a battery-operated control unit with digital display and a measuring line. Measured values are displayed in litres, % and liquid level (cm). Simple operation and setup via three function keys. Measurements are requested by means of pressing the control key (Push-to-Read function). If the level falls below a minimum level that is freely adjustable as a percentage, the backlight of the display flashes red to indicate an alarm during the measurement. Standard tank shapes (linear, spherical, cylindrical and horizontal) are stored. Measuring line connection for hose with 4 mm inside diameter.

Technical data

Functions
Push-to-Read level measurement

Measuring range (tank height)
0/400 cm (fuel oil)
0/350 cm (water)

Measuring accuracy
±1.0 cm

Operating temperature range
Ambient: 0/50 °C
Storage: -20/+65 °C
Medium: 0/50 °C

Display
Multi-coloured, backlit
graphical display (30 x 50 mm):
- Blue = Operation
- Red = Alarm
- Green = Setup

Indication of litres (5 digits),
% or liquid level in cm

Measuring line
PVC hose 4 x 1 mm
Length 20 m
Balance chamber stainless steel

Supply voltage
9 V monobloc battery

Visual alarm
Backlight flashes red
during measurement process

Housing
Wall mounting housing made of impact-resistant plastic (ABS)

W x H x D: 100 x 188 x 65 mm

Degree of protection: IP 20 (EN 60529)

Scope of delivery
- Control unit
- 9 V monobloc battery
- 20 m measuring line with balance chamber
- Connection kit for G½, G1, G1½ and G2
- 25 x nail cable clips, 2 x hose clamps
- Hose adapter (4 mm)
- Mounting accessories

i

DTA 20 E: Smart Home-enabled version based on Basis EnOcean® wireless see page 98.

DG: M, PG: 4	Part no.	**Price €**
DTA 10 with Pneumofix	52145	
DTA 10 without Pneumofix	52155	

Digital tank contents indicator DIT 10

- For fuel oil EL, L, diesel fuel, biodiesel and water
- Universal application in tanks of up to 4 m in height or diameter
- No external supply voltage required
- Push-to-read function for extremely long battery service life

1

Application

Suitable for continuous level measurement in tanks containing fuel oil EL, L or diesel fuel and FAME 100 % as biodiesel (EN 14214). Specially suitable for underground tanks and basement tanks, also in flood hazard areas. For filling levels from 900 mm to 4,000 mm.

Description

The hydrostatic level indicator consists of a control unit with digital display and a submersible probe with integrated pressure measuring cell. High measuring accuracy due to electronic sensor (pressure measuring cell). Simple operation due to device setup via menus. No bearing charts required since all standard tank shapes are stored. Watertight up to 10 m water column.

Technical specifications

Functions
Push-to-read, selection of units, calculation of total volume

Measuring range
0/400 mbar

Measuring accuracy
±1.5 % FS

Operating temperature range
Medium: -5/+70 °C
Ambient: 0/45 °C
Storage: -5/+70 °C

Display
4-digit, 12 mm high LCD 7-segment display with additional symbols

Displayed values
Litres, m³, %, liquid level in mm

Submersible probe
Housing: Stainless steel 304 (1.4301)
Cable: PVC, 6 m with breather tube
Diaphragm: Stainless steel 316 L (1.4435)
Seals: FKM (Viton)
Spacer: POM, PE

Supply voltage
1 x lithium battery 3.6 V (included)
Service life approx. 5 years

Housing
PA6, glass-loaded, blue,
Ø 75 mm, wall mounting

Degree of protection
Control unit: IP 51 (EN 60529)
Submersible probe: IP 68 (EN 60529)

Scope of delivery
- Control unit with digital display
- 5 m connection cable to probe (can be extended by up to 10 m)
- Moisture-proof junction box (IP 54)
- Submersible probe with 6 m submersible cable
- Screw connector kit G1 x G1½ x G2
- Mounting kit for withdrawal flange (PG 9 gland)
- Wall mounting

DG: H, PG: 4	Part no.	Price €
DIT 10	**52150**	
Spare submersible probe (0/400 mbar)	**52153**	
Spare battery	**68309**	

Hydrostatic indicator TankControl 10

1

- For fuel oil EL, L, diesel fuel, biodiesel and water
- Graphical indication of consumption and remaining range
- With visual/audible alarms, Acknowledge button and 2 relays
- Remote measurements up to 15 m

A Page 83

A Page 86

A Page 84

1 Additional probe differential alarm
2 Floating probe

Application

Continuous level measurement with graphical display for indication of consumption (history), calculation of remaining range (forecast) and signalling of minimum or maximum levels as well as for level control. For tanks from 1,000 to 4,000 mm liquid level. Suitable for fuel oil EL, L, diesel fuel, FAME 100 % as biodiesel (EN 14214), water (no drinking water!) as well as similar liquids. In conjunction with an additional submersible probe for differential alarm also suitable for detecting level differences in communicating tanks (e.g. battery tanks) which may cause overfilling. It is also possible to connect a floating probe for backflow alarms (drain system, e.g. for rain water harvesting systems) or for additional minimum or maximum alarms. Specially designed for building technology. Suitable for use in flood hazard areas.

Description

The hydrostatic level indicator consists of a control unit with numerical and graphical display and a submersible probe with integrated pressure measuring cell. Optionally with additional submersible probe for differential alarm or with floating probe. The system displays either litres, m^3, % or liquid level (mm). When the level falls below or exceeds an adjustable minimum or maximum value, the control unit triggers visual and audible (can be acknowledged) alarms. The value for submersible probe 2 is displayed in mm. If an adjustable level difference between submersible probe 1 and submersible probe 2 is exceeded, an alarm is triggered. Two additional relay contacts are available for external alarm devices, for level control or for connection to telecommunication or building control systems. High measuring accuracy due to electronic sensing. Standard tank shapes are stored. Watertight up to 10 m water column.

Technical specifications

Functions

Selection of units, daily saving of level data, consumption monitoring, graphical evaluation of consumption values (up to 5 years), calculation of remaining range, alarm functions (min./max.), sensor error and short circuit alarms.

Measuring range

0/400 mbar

Measuring accuracy

±1.5 % FS

Operating temperature range

Medium:	-5/+70 °C
Ambient:	0/45 °C
Storage:	-5/+70 °C

Display

High-resolution, backlit graphical display (30 x 50 mm). Indication of either litres (6 digits), m^3, % or liquid level in mm. Symbols for alarm functions.

Submersible probe

Housing:	Stainless steel 304 (1.4301)
Cable:	PVC, 6 m with breather tube
Diaphragm:	Stainless steel 316 L (1.4435)
Seals:	FKM (Viton)
Spacer:	POM, PE
Degree of protection:	IP 68 (EN 60529)

Supply voltage

AC 230 V
Lithium battery for data backup (calendar function)

Switching outputs

Relay contacts:	2 voltage-free changeover contacts
Contact rating:	AC 230 V, 2 A

Hydrostatic level indicator TankControl 10

Technical specifications

Visual alarm
Red LED

Audible alarm
Integrated piezo buzzer, can be acknowledged

Housing
Wall mounting housing made of impact-resistant plastic (ABS)
W x H x D 100 x 188 x 65 mm
Degree of protection: IP 54 (EN 60529)

Scope of delivery
- Control unit with graphical display and 15 m connection cable to the probe (cannot be extended)
- Submersible probe with 6 m submersible cable
- Moisture-proof junction box (IP 54)
- Screw connector kit G1 x G1½ x G2
- Mounting kit for withdrawal flange at plastic battery tanks

Options
- Submersible probe for differential alarm
- Floating probe (spare probe Minimelder)

Application examples TankControl 10

Monitoring of the levels in two communicating tanks. A submersible probe is installed in each tank. If the level difference exceeds a defined value, the unit triggers an alarm. The causes of the uneven levels can be removed prior to filling. Potential damage as a result of different levels in the two tanks is avoided.

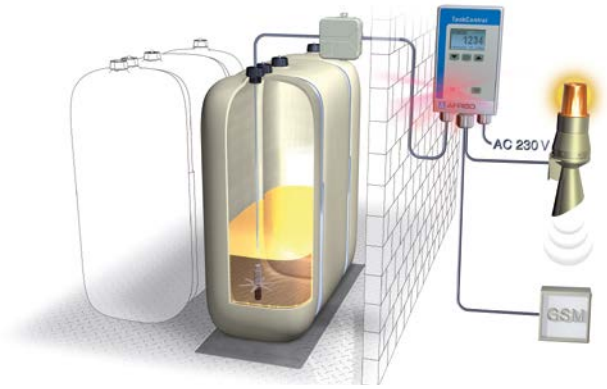

Monitoring of the level in a fuel oil tank with early signalling of minimum level. With combined alarm light and horn as additional alarm equipment outside of the building and transmission of alarm messages, level data and reaming range to a central building control system.

Monitoring of the level in an outdoor rain water tank. A combined alarm light and horn is connected in the vicinity of the tank; TankControl 10 is installed inside the building. It is also possible to connect a float switch to monitor for backflow from the drain. The system can be extended by a GSM-based event reporting system.

PG: 4	DG	Part no.	**Price €**
TankControl 10	H	**52151**	
Spare submersible probe (0/400 mbar)	H	**52153**	
Additional probe differential alarm	H	**52152**	
Floating probe (spare probe Minimelder)	G	**16703**	

Hydrostatic level indicator HydroFox® DMU 08

1

- **Compact and sturdy stainless steel design**
- **Special calibration for all standard pressure units possible**
- **Version with PUR or FEP cable**
- **Optional ATEX version**

A
Page 17

1 Junction box with pressure relief port
2 Digital display and control unit VarioFox 24
3 Signalling device
4 Pressure transducers DMU 08

Application

For electronic, continuous level measurement, e.g. in wells, drilling holes, water, containers or in waste water systems. Suitable for groundwater, drinking water, waste water (with optional FEP cable), diesel fuel, fuel oil; also for use in flood hazard areas.

Description

The level indicators HydroFox® DMU 08 use silicon technology and feature calibrated, amplified sensor signals which are available as standardised voltage or current outputs.

Technical specifications

Measuring accuracy
Deviation from the characteristic curve according to IEC 60770 – limit point calibration (non-linearity, hysteresis, repeatability): < ±0.35 % FSO (measuring ranges 0/100 mbar to 0/400 mbar < ±0.5 % FSO)

Measuring ranges
Relative pressure: 0/100 mbar to 0/300 bar

Overpressure safety
Depends on pressure range
4 x FS to 15 x FS (burst pressure)
3 x FS to 8 x FS (overload)

Operating temperature range
Medium: -10/+70 °C
Ambient: -10/+70 °C
Storage: -25/+70 °C

Temperature error band
In compensated range
0/70 °C ≤ ±1 % FSO/10 K

Dynamic characteristics
Response time ≤ 10 ms

Materials
Housing: Stainless steel 316 L
Diaphragm: Stainless steel 316 L
Seals: FKM (Viton)

Pressure transmission liquid
Silicone oil

Supply voltage
DC 8–32 V
EX version DC 10–28 V

Output signal
4–20 mA, 2-wire

Load
4–20 mA: $R_{max} = [(U_B - U_{Bmin})/0.02\ A]\ \Omega$

Current input
4–20 mA < 25 mA

Electrical protection
Short circuit proof and protected against reverse polarity

Electrical connection (degree of protection)
PUR cable (IP 68)
With integrated breather tube for reference to the ambient atmospheric pressure

Accessories (options)
- Screw connector kit
- Junction box
- Anchor clamp
- Extended weight

Options
- EX version (Ex II 1G Ex ia IIC T4 Ga, Ex II 1D Ex ia IIICT85 °C Da)
- Measuring accuracy 0.1 % FSO
- FEP cable
- SIL 2 (IEC 61508/61511)

SIL Protect your process!

i Complete range of pressure transducers see catalogue INDUSTRIAL TECHNOLOGY.

DG: H	PG	Part no.	Price €
DMU 08 with 5 m PUR cable			
Measuring range			
0/100 mbar	4	31555	
0/160 mbar	4	31556	
0/200 mbar	4	31557	
0/250 mbar	4	31558	
0/300 mbar	4	31519	
Screw connector kit plastic, G2 x 1½ x 1	1	52125	
Junction box with pressure relief port	1	31824	

Digital display units DA 10/12/14

- Grey display with excellent readability
- Text-based user interface
- Linearisation for volume indication (24 points)
- Scalable units, displayed as bar chart
- Integrated supply voltage for transducer

Page 84

1 Digital display unit DA 12
2 Signalling device
3 Pressure transducers DMU 07

Application

Universal application for displaying measured values (DA 10), optionally with additional relay outputs (DA 12/14) for electronic transducers.

Description

Digital display unit in plastic housing for control panel mounting. With grey display and automatic off function for the backlight. The universal measurement input can be configured as a current input or a voltage input. Standard bearing charts for cylindrical horizontal tanks and spherical tanks are pre-programmed, additional units can be selected or set up. The units are scalable and shown as bar charts. Limit values can be displayed via a window and a trend function (rising/falling). With display message (flashing error text) if values are exceeded, parameter backup for restoring previous configurations and potentiometer for test purposes.

Technical specifications

Display
5-digit graphical LC display, backlit (white), text-based user interface, user interface language selectable (German/English/French/Italian), selectable units, custom units can be defined

Measuring range
± 99,999 digits (start and end values scalable as required)

Linearity
± 0.1 % of measuring range

Resolution
Decimal point position can be set as required

Response time
< 0.2 s

Operating temperature range
Ambient: 0/50 °C

Supply voltage
AC 50–253 V / DC 20–253 V
DC 2.5 W / AC 4.4 VA

Sensor supply
Integrated, galvanically isolated supply voltage for transducer: DC 21 V/20 mA

Sensor input
All analogue standard signals, e.g. 4–20 mA, 0–20 mA, 0–1 V, 0–10 V as well as potentiometer

Analogue output
0/4–20 mA, galvanically isolated

Housing
Standard rack mounting housing
W x H x D: 96 x 48 x 135 mm

Panel cut out
W x H: 92 x 45 mm

Degree of protection (front)
IP 65 (EN 60529)

Electrical connection
Plug-in screw terminals (1.5 mm²)

Linearisation
Customer-specific linearisation with a max. of 24 points for the indication of volume (e.g. litres) in non-linear tanks. Bearing charts for cylindrical horizontal tanks and spherical tanks are pre-programmed.

Min./max. value memory
The highest and lowest values reached during operation can be displayed

Additional functions DA 12 / 14

Analogue output 2
0–10 V, galvanically isolated

Switching outputs
Relay contacts: 2 x (DA 12) / 4 x (DA 14) voltage-free changeover contacts (adjustable switching hysteresis)
Contact rating: AC 250 V, 2A, 100 VA

DG: H, PG: 4	Part no.	Price €
DA 10	31281	
DA 12	31282	
DA 14	31283	
DG: H, PG: 3		
Wall mounting housing WAG 01 for one DA	31287	
WAG 02 for two DA	31288	
WAG 03 for three DA	31289	
WAG 04 for four DA	31290	

i
See the catalogue INDUSTRIAL TECHNOLOGY for the complete range of "Digital Display Units".

Level switches
Minimelder-R and Maximelder-R

1

- **For fuel oil EL, L, M, oil/water mixtures and many other media.**
- **With visual/audible alarms, Acknowledge button and 1 relay**
- **Wall mounting housing for fast, professional mounting**
- **EnOcean®-ready**

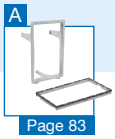

Page 83

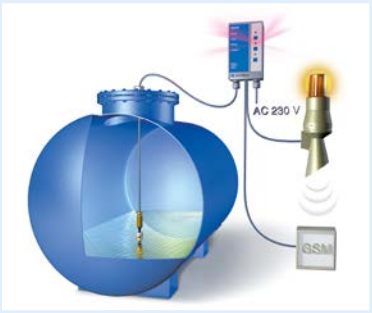

Application

Designed to signal minimum or maximum levels of water, heating oil EL, L, M, oil/water mixtures and neutral, non-viscous and non-adhesive liquids in tanks. System owners are alerted when the supply runs low or if there is a hazard of overfilling.

Description

Minimelder/Maximelder consist of a control unit and a height-adjustable float probe. The Minimelder probe is mounted in the bottom area of the tank and generates an alarm signal when the liquid level falls and the probe is no longer submerged in the liquid. The Maximelder probe is mounted in the top area of the tank and generates an alarm when the liquid reaches the probe. The liquid levels are adjustable. When these levels are reached, the units generate visual and audible alarms. The integrated relay can be used for transmission of the signal to external alarm equipment or for connection to telecommunication or building control systems.
Alarm units with the EnOcean-ready label can be integrated into your existing building automation systems at a later point in time. To do so, plug the EnOcean® wireless module TCM 320 into the EnOcean® interface (PCB of the device).The AFRISO gateway in conjunction with additional AFRISO products with EnOcean® wireless technology allow you to configure a whole range of fully customisable, extensible features for the protection of plants and buildings. The AFRISO gateway in conjunction with additional AFRISO products with EnOcean® wireless technology allow you to configure a whole range of fully customisable, extensible features for the protection of plants and buildings.

Technical specifications

Operating temperature range
Medium: -5/+50 °C
Ambient: -5/+55 °C

Process connection
Plastic screw fitting G1, with cable gland for height adjustment

Probe
Magnetic float switch
L x Ø: 85 x 25.2 mm
Float: Plastic (PA/PP)
Cable: 5 m oil-resistant cable 2 x 0.5 mm²
Weight: Brass
Degree of protection: IP 68 (EN 60529)
Probe voltage: Max. AC 17 V

Connection probe – control unit
Length: 5 m (optionally up to 50 m)

Supply voltage (control unit)
AC 230 V

Power input
5 VA

Switching output
Relay contact: 1 voltage-free changeover contact
Contact rating: AC 250 V, 2 A

Visual indication
1 green LED (operation)
1 red LED alarm

Audible alarm
Integrated piezo buzzer, can be acknowledged

Function test
By means of Test button

Housing
Wall mounting housing made of impact-resistant plastic (ABS)
W x H x D: 100 x 188 x 65 mm
Degree of protection: IP 30 (EN 60529)

DG: G, PG: 4			Part no.	Price €
Minimelder-R	1	-	16701	
Maximelder-R	1	-	16702	
Spare probe for Minimelder	1	-	16703	
Spare probe for Minimelder, 50 m	1	-	16719	
Spare probe for Maximelder	1	-	16704	
Accessories (DG: G, PG: 1)				
Mounting frame	1	-	43521	
Sealing kit (IP 54)	1	-	43416	
EnOcean® wireless module TCM 320	1	-	78082	

CATALOGUE INDUSTRIAL TECHNOLOGY

Product solutions for industrial level applications

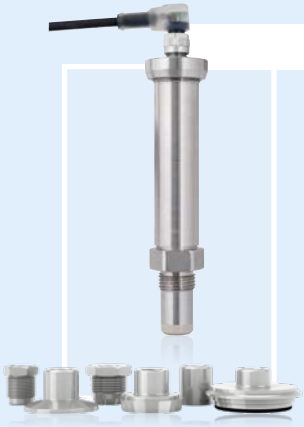

SonarFox® USG 20

- Ultrasonic level switch for liquids with a maximum dynamic viscosity of 10,000 mPa•s
- Modular connection concept by means of adapters
- Flush installation without interfering contours

Page 328

SonarFox® UST 10

- Ultrasonic transmitter for non-contact level measurement of liquid and solid media
- Integrated flow calculation with 32-point linearisation

Measuring ranges
0.2 – 4 m, 0.25 – 6 m or 0.35 – 8 m

Measuring accuracy
0.25 %

Page 308

PulsFox® PMG 10

- Guided micropulse: Level measurement independent of dielectric constant or changes in pressure, temperature or density
- Reliable, accurate measurement even with foam, vapour, dust or turbulent surfaces of the medium
- Available as mono probe, dual probe or coax probe

Measuring range
up to ≤ 24,000 mm

Page 311

CapFox® EFT 7

- For fuel oil and diesel fuel
- Available as band electrode or rod probe

Measuring range
0/200 mm to 0/3,000 mm

Measuring accuracy
± 2 % FS

Page 307

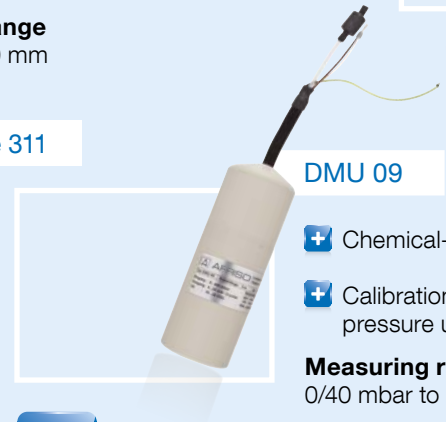

DMU 09

- Chemical-resistant plastic version
- Calibration for all standard pressure units possible

Measuring ranges, relative pressure
0/40 mbar to 0/10 bar

Measuring accuracy
< ± 0.35 % FSO

Page 233

i This and many other products can be found in the catalogue INDUSTRIAL TECHNOLOGY

Overfill prevention systems

Level sensors

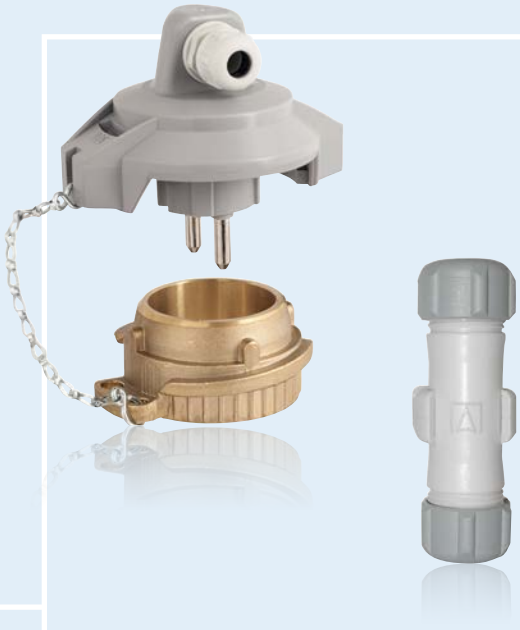

Accessories

CHAPTER 2

Level sensors, overfill prevention systems and PTC thermistor type level controllers

OVERVIEW

Level sensors/overfill prevention systems at a glance 22

Level sensor chain 24

Level sensors with metallised sleeve 27

LEVEL SENSORS

Universal withdrawing system with level sensor chain 26

Level sensors for indoor tanks GWG 12 28

GWG filler caps, cable extension fitting KVA and reducers 30

Level sensors for outdoor tanks GWG 23-Ro/T 32

Level sensors for outdoor tanks GWG 23-Wa 33

Level sensor tester GPG 01 35

Level sensor tester GPR 4 36

Level sensor tester ME 6 / ME 6 P 36

OVERFILL PREVENTION SYSTEMS

Transducers UFS 01 37

Transducers NB 220 H, NB 220 QS 38

Level probes type 76 A, type 76 AH 39

Transducer LS 500, level probe LS 300 EU 40

LEVEL CONTROLLERS

Level controllers RG 210 41

Level sensors/overfill prevention systems at a glance

2

		GWG 12 K/1	GWG 12 K/1C	GWG 12 K/MT	GWG 23-Ro
		Level sensors			
Rectangular tanks (DIN 6625-1)	Tanks	•	•	•	•
Cylindrical horizontal steel tanks (EN 12285-1, 12285-2, DIN 6624-1, 6608-2)	Tanks				•
Cylindrical vertical steel tanks (DIN 6618-1)	Tanks				•
Cylindrical vertical steel tanks (DIN 6619-1)	Tanks				•
Cylindrical vertical steel tanks (DIN 6623-1)	Tanks				•
Underground tanks for petrol	Tanks				•**
Aboveground tanks for petrol	Tanks				•**
Flat bottom tanks (DIN 4119-1)	Tanks				
Plastic tanks	Tanks	•	•	•	•
Other tank types*	Tanks	•	•	•	•
Fuel oil EL (DIN 51603-1)	Media	•	•	•	•
Diesel fuel (EN 590)	Media	•	•	•	•
Fuel oil EL (DIN 51603-1) with 20 % fatty acid methyl ester (FAME) as biofuel	Media	•	•	•	•
Fuel oil EL (DIN 51603-1) with 100 % fatty acid methyl ester (FAME) as biofuel	Media	•		•	•
Diesel fuel (EN 590) with 20 % fatty acid methyl ester (FAME) as biodiesel	Media	•	•	•	•
Diesel fuel (EN 590) with 100 % fatty acid methyl ester (FAME) as biodiesel	Media	•		•	•
Petrol (EN 228)	Media				•**
Aviation petrol	Media				
Aviation/Gasoline	Media				
Aviation turbine fuels	Media				
Special grade fuels	Media				
Aliphatic hydrocarbons	Media				
Gearbox oils, motor oils and hydraulic oils	Media				
Transformer oil	Media				
Vegetable oils	Media				
Oil/water mixtures	Media				
Antifreeze agents	Media				
AdBlue®	Media				
Other flammable/non-flammable liquids*	Media				
Approval for construction products: DIBt approval	Approvals				
Approval for construction products: CE as per EC Construction Products Regulation, EN 13616:2004	Approvals	•	•	•	•
ATEX	Approvals				•**
		Page 28	Page 29	Page 29	Page 32

* See the product description on the corresponding catalogue page or the operating instructions for suitability for other tanks/media.
** Depending on product version.

GWG 23-T	GWG 23-Wa	UFS 01, type 76 A/AH	NB 220	LS 500
Level sensors		Overfill prevention systems		
•	•	•	•	•
•	•	•	•	•
•	•	•	•	•
•	•	•	•	•
•	•	•	•	•
	•	•	•	•
	•	•	•	•
	•	•	•	•
•	•	•	•	•
•	•	•	•	•
•	•	•	•	•
•	•	•		
•	•	•	•	•
•	•	•	•	•
•	•	•	•	•
•	•	•	•	•
	•**			•
				•
				•
				•
				•
				•
		•	•	•
		•	•	•
		•	•	•
		•	•	•
		•	•	•
		•	•	•
		•	•	•
		•	•	•
•	•			
	•			•
Page 34	Page 35	Page 37/39	Page 38	Page 40

Level sensor chain

Is the battery tank facility protected against overfill damage?

Level differences at the beginning of or during the filling process are not an uncommon phenomenon; there are various reasons for this. If this effect occurs, the causes must be identified and removed as quickly as possible. Possible causes include an insufficient filling speed, pollution in the filling or withdrawal systems or leaks. When conventional tank facilities are filled and the first tank filled is not equipped with a level sensor, there is a high risk of overfilling and fuel oil spills. Possible fatal consequences: damage to the building, soil contamination, environmental damage (groundwater), long-term odour problems and immense consequential costs. The owner or operator is fully responsible for all damages.

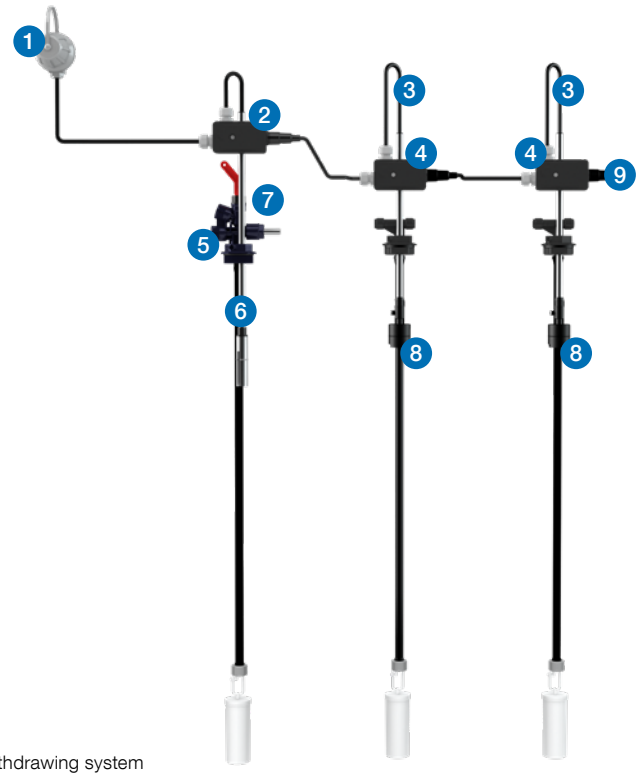

Universal withdrawing system
with GWG level sensor chain for protection against overfilling.

1. GWG connection fitting
2. Universal base unit, communicating,
3. Universal extension, communicating
4. Wiring box
5. Tank withdrawal system (example)
6. Level sensor
7. Current circuit loop from tank vehicle
8. Float switch
9. Terminating plug current circuit

Function principle of GWG level sensor chain

The current circuit of the level sensor which is supplied from the tank vehicle during the filling process and which serves as a safety shut-off system includes float switches if the GWG level sensor chain is installed. A terminating plug at the last tank closes the current circuit. During normal filling, the filling process is terminated when the maximum level is reached. However, if a tank of the facility without a level sensor reaches its maximum level first, the float switch stops the filling process just as if the level sensor had responded. The additional volume caused by the shut off delay and the content of the filling line is considered. Since the filling level of all tanks must be visually detectable or indicated by means of a level indicator, the tank that has caused the shut off is easy to identify.

Level sensor chain

GWG level sensor chain – the best protection against damage caused by overfilling

The AFRISO GWG level sensor chain is used to protect battery tank facilities against overfilling. The system is available for communicating and non-communicating tank facilities. The first tank – in direction of filling – is equipped with the level sensor officially required (battery tank facility with top filling system). With the GWG level sensor chain, each additional tank of the facility contains a level switch to limit the filling level; this level switch is connected to the wiring box of the first level sensor by means of pre-assembled cables and connectors. A terminating plug is connected at the last tank.

Universal withdrawal system with GWG level sensor chain in non-communicating system for three battery tanks with level sensor, float switches and floating withdrawal. Available for retrofitting of existing systems and for new systems of virtually all well-known manufacturers.

Picture: DEHOUST GmbH

Application example (Dehoust tanks): GWG level sensor chain as top filling system DE-A-01 with combined filling and vent line, withdrawal line, level sensor, float switches and floating withdrawal.

Universal withdrawing system with level sensor chain

- **Complete withdrawal system with level sensor chain**
- **Universal replacement for withdrawal systems of battery tank facilities**
- **Reliable protection against overfilling by means of monitoring of all tanks**
- **Level sensor with metallised sleeve for permanent operation even with biofuel/ biodiesel**

Adapters for different tank connections

Application

Replacement for withdrawal system at battery tank facilities of almost all manufacturers. Depending on the version, available for communicating and non-communicating systems. One base unit per system and one extension for each additional tank. The level sensor chain is completely integrated.

Description

The base unit with the level sensor is mounted in the first tank (viewing in direction of filling). An extension is mounted in each additional tank of the battery tank facility (Concerns to typical top filling systems). The level sensor and the level limiters are fully wired, the cables just need to be plugged in. The connector shipped with the base unit is plugged into the last extension. This closes the circuit. The connection cable to the level sensor fitting is connected in the junction box. The pipes for the withdrawal line can be connected with a diameter of 8 mm or 10 mm.
The connection pipes for the withdrawal line are not included. Adapters for the tank connections of tanks of virtually all manufacturers are included.

Technical specifications

Tank height
Up to 200 cm,
can be shortened as required

Connection thread (tank)
G1½
Enclosed adapters for tank connections:
G2, M60 x 4, S75 x 6, flange Ø 68 mm

Media
Fuel oil (DIN 51603-1)
Diesel fuel (EN 590)
with up to 20 % FAME each

Approval for construction products
EC as per Construction Products Regulation (EN 13616)
DIBt: Z-65.17-182

Scope of delivery
- Base unit: Floating withdrawal unit, wiring box, terminating connector, level sensor, adapters for tank connection
- Extension: Floating withdrawal unit, wiring box, float switch, connection cable, adapters for tank connection

i
See operating instructions for list of suitable tanks and tank connections.

DG: G, PG: 3			Part no.	**Price €**
Universal base unit, communicating, level sensor chain	-	-	**20820**	
Universal extension, communicating, level sensor chain	-	-	**20824**	
Universal base unit, not communicating, level sensor chain	-	-	**20825**	
Universal extension, not communicating, level sensor chain	-	-	**20826**	
Withdrawal unit multi-way union ø 8/10 mm	1	10	**20842**	
Withdrawal pipe universal ø 10 x 1 x 1000 mm, aluminium	10	-	**20843**	

Level sensor with metallised sleeve

With the GWG level sensors with metallised sleeve, AFRISO offers maximum safety for the filling of tank facilities. In the case of conventional level sensors, a plastic sleeve provides mechanical protection of the PTC thermistor. The sleeve is open at the bottom and has a slot at the side so that the fuel oil can easily reach the PTC thermistor. However, the openings of the sleeve may get clogged due to the growth of microorganisms (such as bacteria and fungi) and an air cushion is created which prevents the fuel oil from reaching the PTC thermistor. The rise in the use of biofuel with a certain percentage of FAME (fatty acid methyl ester) increases this risk. The higher the FAME content, the greater the water content in biofuels. This creates an environment even more susceptible to the growth of microorganisms.This may cause the level sensor to malfunction and ultimately disable the safety shut-off system. This may lead to overfill damage for which the owner/operator of the facility is liable.

Permanently reliable

The metallised surface of the new sleeves and the new shape of the slot help to prevent the growth of microorganisms and improve the long-term reliability of the level sensor.

Level sensor GWG with metallised or stainless steel sleeve

Type	GWG 12 K/1	GWG 12 K/1C	GWG 12 K/MT	GWG 23-RO	GWG 23-WA	GWG 23-T
Application	For indoor tanks: rectangular tanks (DIN 6625), battery tanks (DIN 6620) or plastic tanks			For outdoor tanks: Cylindrical tanks as per (EN 12285), DIN 6619, DIN 6618, DIN 6623, DIN 6608, flat bottom tanks as per DIN 4119, tanks as per DIN 6620 and DIN 6625, cylindrical vertical steel tanks as per DIN 6624		
Media	Fuel oil EL (DIN 51603), diesel fuel (EN 590), FAME 100 % (EN 14214) as biofuel or biodiesel (up to 20 % FAME with GWG 12 K/1C)					
Approval for construction products	CE marking as per EC Construction Products Regulation 305/2011, EU 574/2014 (EN 13616:2004)					

Level sensors for indoor tanks

GWG 12 K/1

- **Design as per EN 13616**
- **With metallised sleeve for permanent operation even with biofuel/biodiesel**
- **Universal use due to variable height adjustment**
- **Impact-resistant, shock-resistant and deformation-resistant GWG level sensor connection fitting (type 905 yellow)**
- **The right version for each application**

GWG 12 K/1 with bracket

Application

To be used as part of an overfill alarm system to avoid overfilling of tanks. Designed for use with battery type tanks made of sheet steel according to DIN 6620-1 type B and rectangular tanks according to DIN 6625-1 welded on site with heights between 1 and 4 m and for plastic tanks, also in battery arrangement (up to 25 individual tanks). Suitable for use in flood hazard areas.

Description

PTC thermistor type level sensor consisting of probe, screw fitting, fitting for wall mounting as well as cable between probe and fitting. Watertight up to 10 m water column. Odour-tight. Metallised sleeve. The GWG connection fitting type 905 yellow is shock-resistant, impact-resistant and deformation-resistant. GWG 12 K/1 (bracket) with pre-mounted connection fitting type 905 made of grey plastic. The connection fitting is fixed to an aluminium bracket. The connection cable of the level sensor is factory-wired to the connection fitting. For tanks with direct filling (without filling pipe from the outside). See the ordering table for the available versions, fitting colours, probe and cable lengths. GWG filler cap type 906 (part no. 20430) can also be used.

Technical specifications

Process connection
Screw fitting G1, plastic

Media
- Fuel oil EL (DIN 51603-1)
- Diesel fuel (EN 590)
- FAME 100 % as biofuel
- FAME 100 % as biodiesel

Adjustment range
Probe length 360 mm: 80 to 338 mm
Probe length 480 mm: 80 to 438 mm

Approval for construction products
CE marking as per EC Construction Products Regulation 305/2011, EU 574/2014
(EN 13616:2004)

DG: G, PG: 3	Probe length	Fitting	Cable length			Part no.	Price €
GWG 12 K/1 yellow	360 mm	Yellow	1.5 m	1	25	**45100**	
GWG 12 K/1 grey	360 mm	Grey	1.5 m	1	25	**45105**	
GWG 12 K/1 grey	480 mm	Grey	1.6 m	1	25	**45102**	
GWG 12 K/1 yellow	360 mm	Yellow	5.0 m	1	15	**45160**	
GWG 12 K/1 grey	360 mm	Grey	5.0 m	1	15	**45165**	
GWG 12 K/1	360 mm	Without	1.5 m	1	25	**45166**	
GWG 12 K/1	360 mm	Without	5.0 m	1	20	**45167**	
GWG 12 K/1 with bracket	360 mm	Grey	0.4 m	1	25	**45104**	
GWG 12 K/1/5	As desired	Grey	5.0 m	1	-	45199	

Level sensor combinations

Application

To be used as part of an overfill alarm system to avoid overfilling of tanks. Designed for use with battery type tanks made of sheet steel according to DIN 6620-1 type B and rectangular tanks according to DIN 6625-1 welded on site with heights between 1 and 4 m and for plastic tanks. 12 K/MT also for tanks in battery arrangement (up to 25 individual tanks). Suitable for use in flood hazard areas.

GWG 12 K/1C (Euroflex 312)

Description

Level sensor combination only for single tanks. Level sensor combination for single tanks. PTC thermistor type level sensor consisting of probe, screw fitting, fitting for wall mounting as well as cable between probe and fitting. Watertight up to 10 m water column. Odour-tight. Metallised sleeve. The screw fitting is a withdrawal system Euroflex 312 with quick-action shut-off valve with connection for flow, return and measuring lines. The GWG connection fitting type 905 yellow is shock-resistant, impact-resistant and deformation-resistant.

Technical specifications

Fitting
Type 905 yellow for wall mounting

Process connection
Screw fitting G1½

Medium
- Fuel oil EL (DIN 51603-1)
- Diesel fuel (EN 590)
- FAME 20 % in fuel oil
- FAME 20 % in biodiesel

Adjustment range
80 to 338 mm

Probe length
360 mm

Hose length
2.15 m

Cable length
5 m

Approval for construction products
CE marking as per EC Construction Products Regulation 305/2011, EC 574/2014 (EN 13616:2004)

GWG 12 K/MT

PTC thermistor type level sensor consisting of mechanical level indicator MT-Profil R, probe, screw fitting, fitting for wall mounting as well as cable between probe and fitting. Watertight up to 10 m water column. Odour-tight. Metallised sleeve. The GWG connection fitting type 905 yellow is shock-resistant, impact-resistant and deformation-resistant.

Fitting
Type 905 yellow for wall mounting

Process connection
Screw fitting G1½

Medium
- Fuel oil EL (DIN 51603-1)
- Diesel fuel (EN 590)
- FAME 100 % in biofuel
- FAME 100 % in biodiesel

Measuring range level (tank height)
Reversible scale 0/150 cm and 0/250 cm.

Adjustment range level sensor
80 to 338 mm

Probe length
360 mm

Cable length
5 m

Approval for construction products
CE marking as per EC Construction Products Regulation 305/2011, EC 574/2014 (EN 13616:2004)

i GWG filler cap see page 30.

DG: G	PG			Part no.	Price €
GWG 12 K/1 C with withdrawal system Euroflex	1	1	10	20190	
GWG 12 K/MT with level indicator MT-Profil R	3	1	10	45311	

Accessories for level sensors

GWG filler cap

Application
For facilities that may be operated with fuel oil EL standard and low-sulphur, diesel or biodiesel.
Suitable for flood hazard areas.

Description
GWG filler cap with bayonet connection G2 with integrated level sensor connection fitting. Brass male coupling as per EN 14420-6. Filler cap made of oil- and weather-resistant plastic. Watertight up to 10 m water column. Lockable with standard padlock.

Scope of delivery includes green label "Fuel oil EL low-sulphur" and red label "Also for fuel oil EL standard".

GWG filler cap

Cable extension fitting KVA

Application
For 2-wire electrical cables (max. 42 V/4 A).
Suitable for flood hazard areas.

Description
Clamp connections (gland) at both ends for cable diameters between 6 and 8.3 mm. Watertight up to 10 m water column.

Wire cross section: max. 2.5 mm²
Degree of protection: IP 68 (EN 60529)

Cable extension fitting KVA

Reducers

Reducer G1½ x G1
Reducer G1½ x G1 made of grey plastic (ABS).

Reducer G2 x G1½
Reducer G2 x G1½ made of grey plastic (ABS).

Reducers

See page 128 for additional filler caps.
See page 35 for level sensor testers.
See page 34 for fittings for level sensors.

DG: G	PG			Part no.	Price €
GWG filler cap	2	1	10	20430	
Reducer G1½ x G1	1	10	-	20905	
Reducer G2 x G1½	1	10	-	20903	
Cable extension fitting KVA	1	1	10	40041	

Level sensors for outdoor tanks as per EN 13616:2004

Fittings for level sensors

1. Coupling plug type 902
2. Coupling socket type 903
3. GWG fitting for wall mounting type 905
4. Pipe fitting type 904 with flange plug type 901

Benefits

- **The right version for each application**
- **Compact, corrosion-proof design**
- **Adjustable for different tank sizes**
- **Universal use due to variable height adjustment**
- **Yellow tube fitting made of impact-resistant plastic with ATEX approval (zone 0) and stainless steel sleeve**
- **Chemical resistance even if used with biodiesel, biofuel or admixtures up to 100 %**
- **Metallised sleeve of grey fitting for permanent operation even with biofuel/biodiesel**
- **Easy and fast installation**

Level sensor GWG 23-Ro/T for outdoor tanks as per EN 13616:2004

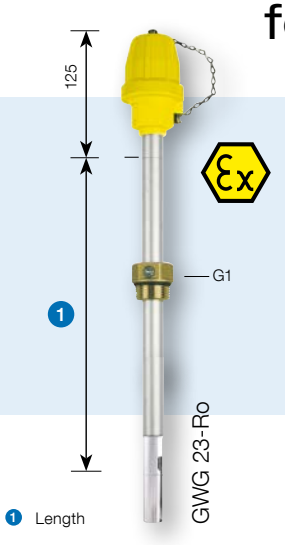

- **Fuel oil EL, diesel fuel, biofuel/biodiesel and petrol**
- **With metallised sleeve (with grey version) for permanent operation even with biofuel/biodiesel**
- **Yellow fitting with ATEX approval (zone 0) and stainless steel sleeve**
- **Variable height adjustment**

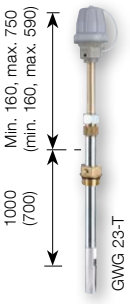

Application

To be used as part of an for overfill alarm system to avoid overfilling of tanks. For tanks as per EN 12285-1, 12285-2, DIN 6618, 6619, 6623, 6624, 6608, 4119 and tanks as per DIN 6620 and DIN 6625 or equivalent tanks. Suitable for the following media: fuel oil EL and diesel fuel as well as biofuel, biodiesel or petrol under certain conditions. See the operating instructions for additional information.

Description

PTC thermistor type level sensor consisting of height-adjustable probe and screw fitting. Pressure- and vacuum-tight. Watertight up to 10 m water column.

GWG 23-Ro with tube fitting made of **yellow plastic**, highly impact-resistant, deformation-resistant with strong chain and flange gasket. Also suitable for petrol with GWG level sensor sleeve made of stainless steel.

GWG 23-Ro with tube fitting made of **grey plastic**. Suitable for the following media: fuel oil, diesel fuel, biofuel and biodiesel. With metallised sleeve.

GWG 23-T with telescopic tube for height adjustment of the connection fitting. Tube fitting made grey plastic, shock-resistant, with tie, without flange gasket.

When selecting a level sensor, please check to see that the fitting is as close as possible to the access chamber cover – the distance should be no less than 20 mm and no more than 300 mm. See the operating instructions for the adjustment dimension in the tank.

Technical specifications

Probe length
From 400 to 1,000 mm, probe lengths up to 3,000 mm, see ordering table

Process connection
Screw fitting G1

Operating temperature range
Medium: -25/+50 °C
Ambient: -25/+60 °C

Operating pressure in the tank
No pressure

Material

GWG fitting:	Plastic
Probe tube:	Steel, galvanised
Screw fitting:	Brass
PTC thermistor:	Glass-encapsulated
GWG sleeve:	Plastic, metallised (grey version) stainless steel (yellow version)

Approval for construction products
CE marking as per EC Construction Products Regulation 305/2011, EC 574/2014, EN 13616:2004
GWG with yellow fitting: Ex II 1 G Ex ia IIB T3

i
See page 34 for prices and versions.

Level sensor GWG 23 Wa for outdoor tanks as per EN 13616:2004

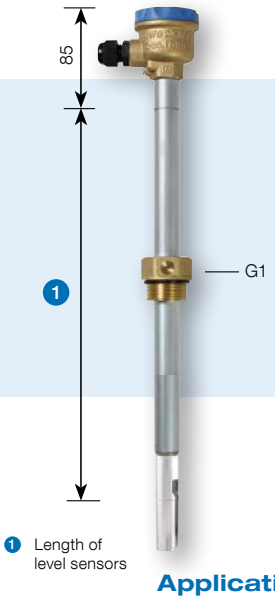

1 Length of level sensors

- **Fitting for wall mounting**
- **For fuel oil, diesel fuel, biofuel/biodiesel**
- **Yellow fitting with ATEX approval (zone 0)**
- **Variable height adjustment**
- **Suitable for use in flood hazard areas**
- **Yellow fitting with high-grade stainless steel sleeve**

GWG fitting for wall mounting

2

Application

To be used as part of an for overfill alarm system to avoid overfilling of tanks. For tanks as per EN 12285-1, 12285-2, DIN 6618, 6619, 6623, 6624, 6608, 4119 and tanks as per DIN 6620 and DIN 6625 or equivalent tanks whose diameters and volumes correspond to the EN 12285-1 design. Suitable for the following media: fuel oil EL and diesel fuel as well as biofuel, biodiesel or petrol under certain conditions. See the operating instructions for additional information.

Description

PTC thermistor type level sensor consisting of height-adjustable probe, screw fitting, junction box at the upper end of the tube and fitting for wall mounting. Pressure- and vacuum-tight. Watertight up to 10 m water column.

Technical specifications

Probe length
From 400 to 700 mm,
probe lengths up to 3,000 mm possible, see ordering table

Process connection
Screw fitting G1

Operating temperature range
Medium: -25/+50 °C
Ambient: -25/+60 °C

Operating pressure in the tank
No pressure

Material

Junction box:	Brass/plastic
GWG fitting (wall mounting):	Plastic
Probe tube:	Steel, galvanised
Screw fitting:	Brass
PTC thermistor:	Glass-encapsulated
GWG sleeve:	Stainless steel

Approval for construction products
CE marking as per EC Construction Products Regulation 305/2011, EC 574/2014, EN 13616:2004
GWG with yellow fitting: Ex II 1 G Ex ia IIB T3

i
See page 36 for prices and versions.

Level sensors for outdoor tanks as per EN 13616:2004

	Fitting	Probe length (mm)			DG	PG			Part no.	Price €
GWG 23-Ro 400	Yellow	400			G	3	1	-	**46115**	
GWG 23-Ro 700	Yellow	700			G	3	1	-	**46116**	
GWG 23-Ro 1000	Yellow	1,000			G	3	1	-	**46117**	
GWG 23-Ro So, special lengths	Yellow	Max. 3,000			G	3	1	-	46118	
GWG 23-Ro 400	Grey	400			G	3	1	-	**46125**	
GWG 23-Ro 500	Grey	500			G	3	1	-	**46185**	
GWG 23-Ro 700	Grey	700			G	3	1	-	**46126**	
GWG 23-Ro 1000	Grey	1,000			G	3	1	-	**46127**	
GWG 23-Wa 400	Yellow	400			G	3	1	-	**46130**	
GWG 23-Wa 700	Yellow	700			G	3	1	-	**46131**	
GWG 23-Wa So, special lengths	Yellow	Up to max. 3,000			G	3	1	-	46133	
GWG 23-T 700	Grey	700	Min. length: 860	Max. length: 1,290	G	3	1	-	**47622**	
GWG 23-T 1000	Grey	1000	1,160	1,750	G	3	1	-	**47623**	

Please enquire for coded plug inserts for QSS and filling hose control system (ASS).

Accessories	Fitting	DG	PG			Part no.	Price €
GWG fitting 905-W	Grey	G	1	1	-	**40050**	
GWG fitting 905-W	Yellow	G	1	1	-	**40052**	
Coupling socket TW 903	-	G	1	1	-	40030	
Coupling plug TW 902	-	G	1	1	-	40045	

i

Other lengths on request.

Level sensor tester GPG 01

NEW

- **Intuitive operation by means of "step by step" instructions**
- **For all level sensors as per EN 13616 design B1 (formerly TRbF 511)**
- **For liquids with a flash point of > 55 °C such as fuel oil, diesel and other liquid fuels or oils**
- **High-resolution TFT colour display and powerful lithium-ion battery for optimum readings and many measurements**
- **Robust protective sleeve with magnet for convenient, hands-free operation**

Application

For full testing of level sensors which are not used in hazardous areas/potentially explosive atmospheres. It is possible to perform a simple electrical function test with the level sensor installed as well as a wet test with the level sensor uninstalled.

Description

Modern, robust housing with high-resolution TFT colour display and foil keypad with four keys and On/Off button. A 1.2 m connection cable with a coupling socket 903 for plugging in the level sensor is mounted at the top. A mini USB port for the power supply unit/battery charger is located at the bottom. The electrical function test displays the heat-up time in seconds and filling release. When a wet test is performed, the switch off time in seconds after submersion in liquid is indicated. At the end of the test, the full test result is displayed in the form of a summary. In the case of error messages and malfunctions, the display colour changes to red and a corresponding text is shown. If the device is not in use, it is switched off automatically; the charging function remains active.

Technical specifications

Operating temperature range
Ambient: 0/40 °C
Storage: -20/+50 °C

Hours of operation
Max. 38 hours

Weight
Approx. 360 g (device)

Dimensions
W x H x D: 66 x 143 x 37 mm
(without connection cable)

Connection level sensor
1.2 m connection cable with coupling socket 903

Display
TFT colour display, 2.8"
W x H: 45 x 60 mm

Supply voltage
Lithium-ion battery (3.6 V/1,800 mAh)
or power supply unit (USB)

Scope of delivery
Tester with coupling socket 903,
USB power supply unit, mini USB cable,
a protective sleeve with magnet, case, instructions.

Level sensor testers with connector – suitable for all level sensor fittings.

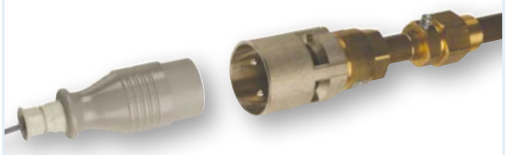

DG: G, PG: 4	Part no.	**Price €**
Level sensor tester GPG 01	**46200**	

Level sensor testers GPR 4/ME 6

GPR 4

ME 6 / ME 6 P

Application

For fast and easy electrical function tests of level sensors. For use with storage tanks for fuel oils and diesel fuels. Not permitted for use in hazardous areas and not for level sensors which are installed in tanks containing hazardous media.

For genuine function tests of all level sensors built to EN 13616. ATEX-certified.

Description

Simple level sensor tester with connector, suitable for all level sensor fittings. A signal lamp indicates function or error. Battery-operated. Delivery with level sensor connection fitting, also suitable for level sensor with brass fitting.

Level sensor tester with connector. The level sensor is heated up by the intrinsically safe current of the tester. The heat-up time and the switch-off time are measured, evaluated and shown on the touch display. Version ME 6 P also detects and displays the QSS coding (quality assurance system product code) of the level sensor. The device stores the measured data; they can be transmitted to a PC via a USB cable.

Technical specifications

Level sensor testers with connector – suitable for all level sensor fittings.

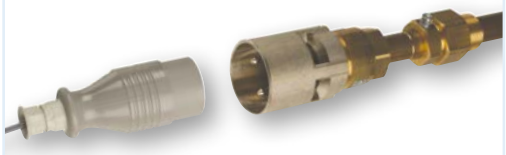

Operating temperature range
Ambient: 0/50 °C

Housing
W x H x D: 105 x 210 x 40 mm

Display
Touch display, 36 x 65 mm (W x H)

Degree of protection
IP 30

Supply voltage
4 x AA NiMH batteries (1.2 V / 1,800 mAh)

Interfaces
USB-B

Scope of delivery
GWG level sensor tester with coupling socket type 903, USB charger, PC-software on USB flash drive
in case

Approval
Tester: II (1) G [Ex ia Ga] II C
Coupling socket: II 2 G Ex ia II C T4 Gb

DG: H, PG: 4	Part no.	Price €
Level sensor tester GPR 4	**62301**	
Level sensor tester ME 6-Set	**62234**	
Level sensor tester ME 6 P-Set	62235	

Transducer for overfill prevention system UFS 01 (WHG)

- **Compact, modern design**
- **With visual/audible alarms, Test and Acknowledge buttons**
- **2 relay outputs for additional alarm equipment, EMS, etc.**
- **Fail-safe, self-monitoring transducer for maximum reliability**

Seite 39

Page 84

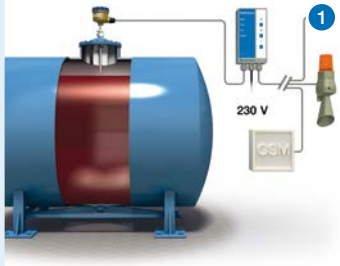

1 Pump

Application

To avoid overfilling of stationary tanks and stationary-use tanks. Suitable for a wide range of flammable and non-flammable water-polluting liquids with a flash point > 55 °C.

Description

Type-approved together with all level probes type series 76 and UFS 01 as part of an overfill prevention system. UFS 01 in a wall mounting housing consists of a transducer and a suitable level probe (to be ordered separately). The transducer contains all display elements and controls as well as all electronic components for signal processing and conversion of the level probe signal into a digital output signal. The level probe and the transducer are connected by means of a two-wire signal cable. When the maximum permissible level is reached, UFS 01 triggers visual and audible alarms. The transducer also features two output relays for connection of event reporting systems, the additional alarm unit ZAG 01 or additional equipment.
Ancillary control unit type 907-Z can be connected as an additional control unit to enable connection to a road tanker with overfill alarm system.

Media

- Fuel oil EL, diesel fuel, biodiesel
- Diesel/biodiesel mixtures
- Used gearbox oils and motor oils
- Unused motor oils, gearbox oils and hydraulic oils
- Transformer oil
- Hexanol 1
- Ethyl aceto-acetate (aceto-acetic ester)
- Acrylic acid 2-ethyl hexylene ester (2-ethyl hexylene acrylate)
- Cyclohexyl acetate, benzaldehyde
- Methyl aceto-acetate
- Nitrobenzene, 1.2 dichlorobenzene
- 2.4 dimethylaniline (N, N dimethylaniline)
- n octanol (n octyl alcohol)
- Diethyloxalate
- Aniline
- Vegetable oil (also as per EN 51605)
- Oil/water mixtures (e.g. drilling oil or lubricating oil)
- Perchloroethylene and trichloroethylene
- Antifreeze agents
- Cleaning agent/water mixtures
- AdBlue® (urea solution) as per DIN 70070

as well as comparable water-polluting liquids with identical heat conductivity with a flash point of > 55 °C.

Technical specifications

Operating temperature range
Ambient: -20/+60 °C

Supply voltage
AC 230 V or AC/DC 15 – 40 V
Power input: < 10 VA

Output relay
1 changeover contact / 1 normally open contact (can be acknowledged)

Housing
Wall mounting housing made of impact-resistant plastic (ABS)
W x H x D: 100 x 188 x 65 mm

Degree of protection
IP 40 (EN 60529)

Weight
0.6 kg

Approval for construction products
DIBt: Z-65.11-193

	DG	PG	Part no.	Price €
Transducer UFS 01, AC 230 V	H	4	**53202**	
Transducer UFS 01, AC/DC 15–40 V	H	4	53216	
Mounting frame	G	1	**43521**	
Sealing kit (IP 54)	G	1	**43416**	
Ancillary control unit type 907-Z, 230 V	H	2	53232	
Ancillary control unit type 907-Z, DC 24 V	H	2	53262	

i
See page 39 for level probes.

Transducers for overfill prevention systems (WHG)

Application

To avoid overfilling of stationary tanks and stationary-use tanks.
Suitable for a wide range of water-polluting liquids with a flash point of > 55 °C (see product description UFS 01 for list of substances).

Transducer NB 220 H

Description

Type-approved together with all level probes type series 76 and UFS 01 as part of an overfill prevention system. When the level probe comes in contact with the liquid, the relay switches. Alarm units for visual and audible alarms are additionally required.

Technical specifications

Supply voltage
AC 230 V or DC 24 V

Power input
Max. 4 VA/6 W

Output
Voltage-free changeover contact

Contact rating
AC 250 V, max. 500 VA

Housing (degree of protection)
Plug-in housing, (IP 30)
W x H x D: 50 x 110 x 110 mm

Approval for construction products
DIBt: Z-65.11-193

Transducer NB 220 QS

Type-approved together with all level probes type series 76 and UFS 01 as part of an overfill prevention system. With integrated alarm lamp, alarm horn and Acknowledge button for the alarm horn. An external alarm lamp, alarm horn or the additional alarm unit ZAG 01 can be connected via the output relay. When the level probe comes in contact with the liquid, NB 220 QS generates visual and audible alarms and the relay switches.
Ancillary control unit type 907-Z can be connected as an additional control unit to enable connection to a road tanker with overfill alarm system.

Supply voltage
AC 230 V

Power input
Max. 4 VA/6 W

Output current circuits
- 1 x AC 230 V (100 W) e.g. for lamp/solenoid valve, cannot be acknowledged
- 1 x AC 230 V (50 W) e.g. for horn, can be acknowledged

Housing (degree of protection)
Plug-in housing (IP 30)
W x H x D 75 x 150 x 110 mm

Approval for construction products
DIBt: Z-65.11-193

i

See page 39 for level probes.
See page 37 for a list of liquids (substances).

See page 86 for additional alarm unit ZAG 01 with visual/audible alarms.

DG: H	PG			Part no.	Price €
Transducer NB 220 H – AC 230 V	4	1	-	53210	
Transducer NB 220 H – DC 24 V	4	1	-	53219	
Transducer NB 220 QS	4	1	-	53213	

Level probes for overfill prevention systems (WHG)

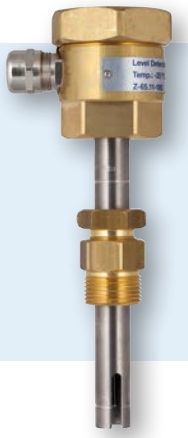

Application

Level probe for transducers as part of an overfill prevention system for stationary tanks and stationary-use tanks used to store water-polluting liquids with a flash point of > 55 °C to 100 °C (see product description UFS 01 for list of substances).

Level probe type 76 A

Description

Approved as part of an overfill prevention system together with level transducer UFS 01, NB 220 H and NB 220 QS. The level probe type 76 A consists of a probe tube with a stainless steel-encapsulated PTC thermistor sensor at the lower end, a junction box and a screw fitting. Tube length 100 to 3,000 mm in increments of 100 mm. Standard lengths up to 500 mm. The overfill prevention system must be set up in such a way that a visual alarm and a sufficiently loud audible alarm are triggered when the maximum permissible level is reached.

Technical specifications

Material

Junction box:	Brass
Probe tube:	Stainless steel 316 Ti or 304
Screw fitting:	Brass
PTC thermistor:	Stainless steel-encapsulated

Process connection
Connection thread G¾

Operating temperature range
Medium: -25/+50 °C

Degree of protection
IP 54 (EN 60529)

Approval for construction products
DIBt: Z-65.11-193

Level probe type 76 AH

Approved as part of an overfill prevention system together with level transducer UFS 01, NB 220 H and NB 220 QS. The level probe type 76 AH consists of a probe tube with a stainless steel-encapsulated PTC thermistor sensor at the lower end, a junction box and a screw fitting. Tube length 100 to 3,000 mm in increments of 100 mm. Standard lengths up to 500 mm. The overfill prevention system must be set up in such a way that a visual alarm and a sufficiently loud audible alarm are triggered when the maximum permissible level is reached.

Material

Junction box:	Brass
Probe tube:	Stainless steel 304 or 316 Ti
Screw fitting:	Brass
PTC thermistor:	Stainless steel-encapsulated

Process connection
Connection thread G¾

Operating temperature range
Medium: -25/+80 °C

Degree of protection
IP 54 (EN 60529)

Approval for construction products
DIBt: Z-65.11-193

DG: H, PG: 3	Part no.	**Price €**
Level probe type 76 A 100 mm	**53225**	
200 mm	**53217**	
300 mm	**53220**	
400 mm	**53207**	
500 mm	**53209**	
Extra charge per 100 mm	–	
Level probe type 76 AH* 500 mm	**53214**	

*Please enquire for other response lengths.

i
See page 37 for a list of liquids (list of substances).

Overfill prevention system LS for Ex (WHG)

Transducer LS 500

Application

To avoid overfilling of stationary tanks and stationary-use tanks. Approved without list of substances for water-polluting liquids, also with flash point < 55 °C.

Description

Transducer with test button. Type-approved together with the level probes LS 300 EU, LS 300 FU or LS 300 ESPU as part of an overfill prevention system. The transducer supplies the level probe via an intrinsically safe circuit, evaluates the change in resistance of the PTC thermistor, continuously checks the PTC thermistor operation and monitors the system (power outage, short circuit, line interruption, etc.). Negative results cause the overfill prevention system to respond. The additional alarm unit ZAG 01 can also be connected.

The overfill prevention system must be set up in such a way that visual and audible alarms are triggered when the maximum permissible level is reached. The transducer must be installed outside of the hazardous area.

Technical specifications

Supply circuit
Supply voltage: AC 230 V
Power input: max. 4 VA
(Supply voltage: DC 24 V
or AC 24 V at extra charge)
Output current circuit 1 voltage-free changeover contact
Sensor current circuit (intrinsically safe)
Voltage: < DC 15.8 V
Current: < 154 mA
Power: < 600 mW

Operating temperature range
-25 °C/+50 °C

Housing (degree of protection)
Wall mounting housing (IP 40)
W x H x D: 75 x 150 x 110 mm

Approval for construction products
DIBt: Z-65.11-228

EC Type Examination Certificate:
TÜV 00 ATEX 1641 Ex II (1)G [Ex ia] IIC

Level probe LS 300 EU

Level probe for transducers as part of an overfill prevention system for stationary and stationary-use tanks. Suitable for installation in all tank versions. Approved without list of substances for water-polluting liquids, also with flash point < 55 °C.

Approved part of an overfill prevention system according to WHG together with the LS 500 transducer – self-monitoring and with automatic corrosion monitoring. LS 300 EU consists of a height-adjustable probe tube made of stainless steel with a PTC thermistor sensor element at the lower end, a screw fitting and a brass junction box with integrated overvoltage protection. Standard length 500 mm, max. length 3,000 mm. The level probe can be used in liquids up to 3 bar overpressure.

Material

Junction box:	Brass, chrome-plated
Probe tube:	Stainless steel 316 Ti
Screw fitting:	Stainless steel 316 Ti
PTC thermistor:	Stainless steel-encapsulated

Process connection
Screw fitting G⅜

Operating temperature range
Medium: -25/+50 °C

Degree of protection
IP 67 (EN 60529)

Approval for construction products
DIBt: Z-65.11-228

EC Type Examination Certificate:
TÜV 00 ATEX 1656X
Ex II 1G Ex ia IIC T4
Ex II 1/2G Ex ia IIC T4

DG: H, PG: 4	Part no.	Price €
LS 500	**53310**	
Level probe LS 300 EU, 500 mm	**53300**	
Extra charge per 100 mm (> 500 mm)	–	

PTC thermistor level controller RG 210

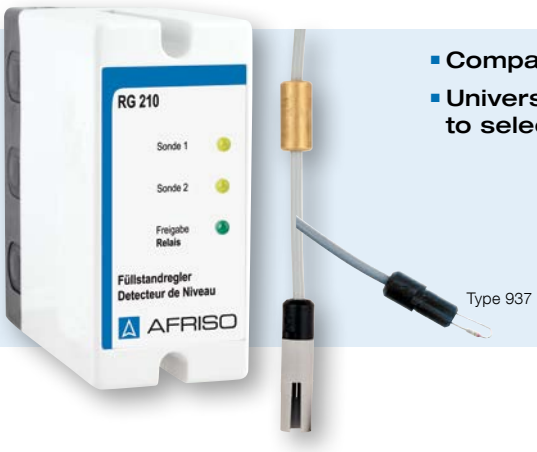

- **Compact control unit**
- **Universal application due to selectable functions**

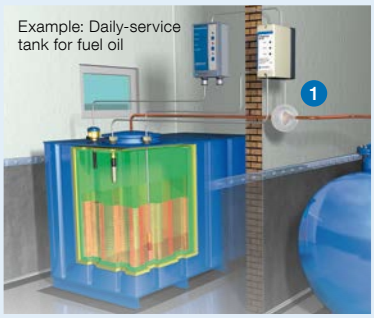

1 Storage tank pump

Application

For use in electrically non-conductive liquids which are not viscous or adhesive, for example, fuel oil, diesel fuel, emulsions and media which are not corrosive.

Description

PTC thermistor type level controller with selectable functions:
- Level switch (1 probe)
- Level control for filling (2 probes)
- Level control for emptying (2 probes)

Level switch with 1 probe:
The relay switches in case of contact or loss of contact with the liquid. When the switch point is set, it must be observed that the PTC thermistor requires approx. 8 seconds to heat up depending on the ambient temperature.

Level control for filling with 2 probes:
Set internal switch to "fill". The relay energises after the min. probe has heated up. Relay de-energises when the max. probe comes into contact with the liquid.

Level control for emptying with 2 probes:
Set internal switch to "empty". Relay energises when max. probe has contact with the liquid. Relay de-energises when the min. probe loses contact with the liquid and heats up.

Technical specifications

Operating temperature range
Medium: -25/+55 °C
Ambient: -10/+55 °C

Probe
PTC thermistor probe, type 937
Cable length 3 m (max. 50 m)
Process connection G½, G1

Supply voltage
AC 230 V

Power input
12 VA

Relay contact (output)
1 voltage-free changeover contact

Housing (degree of protection)
Plug-in housing (IP 30)
W x H x D: 53 x 113 x 108 mm

Flexible PTC thermistor probe type 937
Flexible PTC thermistor designed for oils and other electrically non-conductive liquids (low-viscosity, non-adhesive).
The PTC thermistor connection wires are not encapsulated. Not suitable for installation in humid environments.

i

Note: Not to be used as an overfill prevention system according to WHG. Requires the connection of an overfill prevention system according to WHG.

DG: H, PG: 4			Part no.	**Price €**
Level controller RG 210	1	-	53206	
Flexible PTC thermistor probe type 937	1	-	53204	

Liquid-based leak detector LAG

Vacuum type leak detector EUROVAC

Inner tank linings

Leak detectors - sight glass principle

CHAPTER 3

Leak detectors, leak monitoring systems and leak protection linings

OVERVIEW

Leak protection, leak monitoring, oil tank conversion 44

Vacuum type leak detector Eurovac 50

LEAK DETECTION

Leak detectors - sight glass principle LAS 46

Leak detector LAG-13 KR 47

Leak detector LAG-14 ER 48

Accessories for leak detectors 49

Vacuum type leak detector Eurovac NV 51

Vacuum type leak detector Eurovac HV 52

Protective equipment for leak detectors: liquid barrier, condensate bar 53

Spare parts for leak detectors 54

Pressure type leak detector Europress 60

LEAK PROTECTION

Tank protection package AK-S for fuel oil, diesel 55

Inner linings AF-S for liquid fertiliser AHL, AdBlue® 56

Inner linings AR-S for rainwater harvesting 57

Rainwater inner lining AR-SM with magnets 58

Mounting accessories for inner linings 59

Professional equipment and convincing solutions for tank protection

With a comprehensive range of building technology products, AFRISO prides itself in "Making Tanks Safe". In addition to this extensive range, a large selection of alarm instruments for the fast detection of level, liquid spillage, leakage, gas or smoke is available.

Advantages – your benefits

- Complete range of products for professional tank protection from a single supplier
- Maximum protection against fuel oil accidents with brand products with approval for construction products
- Chemical resistance even if used with biodiesel, biofuel or admixtures
- Inner linings exactly made to size and ready for easy installation
- 10 years warranty on material and workmanship for plastic inner linings
- Fittings and devices ready to be installed, with all required mounting accessories

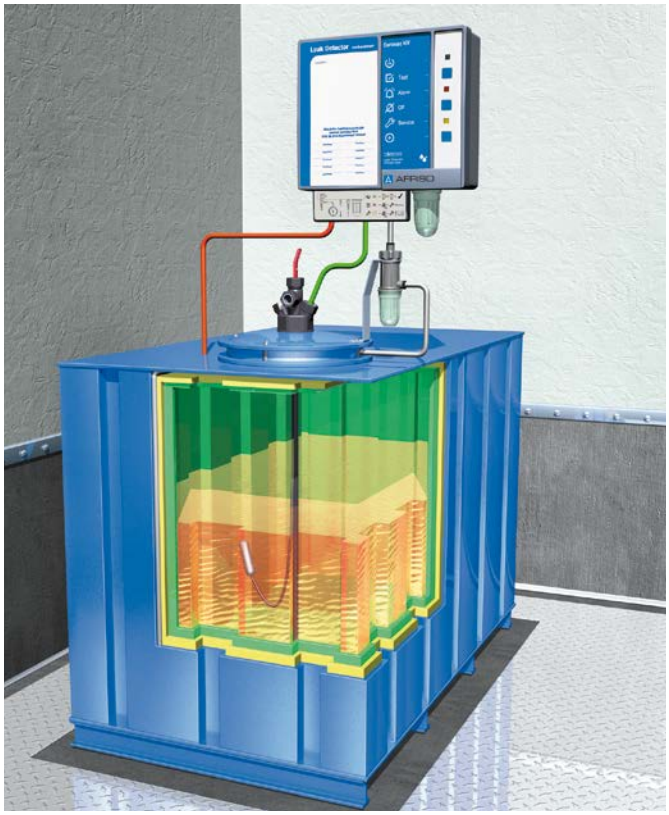

Leak protection

The installation of customised AFRISO leak protection linings turns single-walled steel tanks into double-walled tanks. Complex drip pans or collection facilities are no longer required. Oil cannot escape even if there is a leak in the outer tank wall. The Eurovac leak detector uses a vacuum in the interstitial space between the inner lining and the tank wall to monitor both walls for leaks. Malfunctions and leaks are immediately signalled.

Leak detectors and the WATCHDOG-LINE family of alarm units
The uniform appearance not only ensures customer confidence, but also underpins the professionalism of the specialised company.

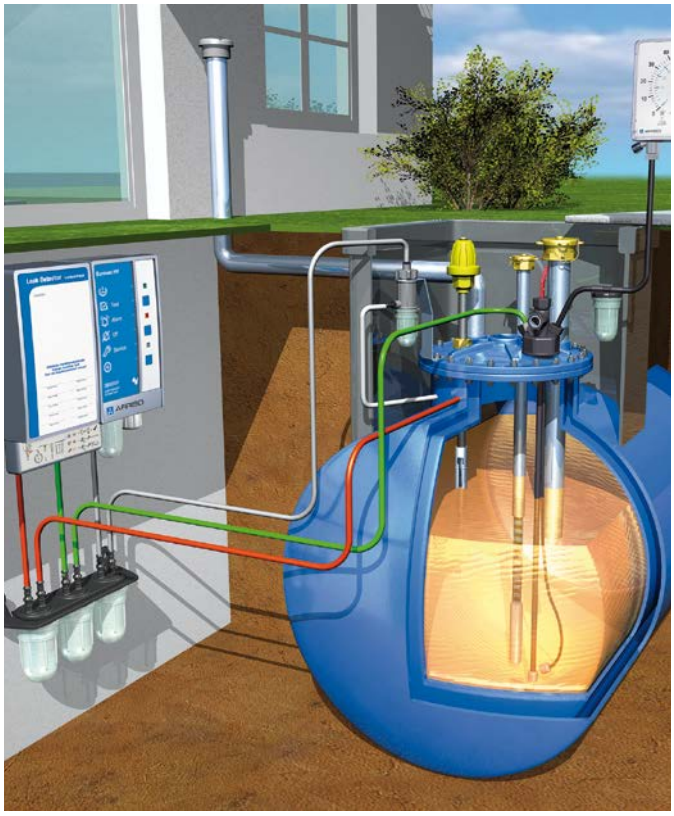

Leak monitoring

Application areas
- Cylindrical steel or plastic (glass-fibre reinforced plastic) tanks
- Double-walled steel tanks
- Steel tanks manufactured on site
- Spherical tanks
- Tanks with inner lining
- Inspection ducts
- Oil storage rooms/collection facilities
- Containers, cisterns, cesspits

Media
- Fuel oil EL
- Diesel fuel
- Biofuel
- Biodiesel
- AHL
- AdBlue®
- Rainwater
- Other liquids

Oil tank conversion kits

If oil tanks can no longer be used or if the heating system is converted to other types of energy or if old unused cesspits and cisterns are available, the containers can be equipped with a plastic inner lining for rainwater harvesting and integrated into a rainwater harvesting system.
Various conversion kits, inner linings and a complete range of accessories are available.

Leak detectors LAS - sight glass principle

LAS 230

LAS 72

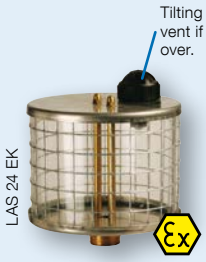

LAS 24 EK

Application

For aboveground double-walled tanks containing water-polluting liquids. Application under atmospheric conditions for steel tanks and double-walled tanks with approval for leak detectors.
Types LAS 24 E, LAS 39 E and LAS 72 E for all water-polluting liquids. Types LAS 24, LAS 39, LAS 72 and LAS 230 for water-polluting with a flash point of > 55 °C.

Description

Leak detector for liquid systems consisting of a transparent acrylic glass cylinder, stainless steel housing covers and bottoms. Connection thread G1. Approval for construction products, DIBt: Z-65.24-381.

Versions

Version E with wire mesh cylinder. LAS 24 EK for mobile tanks with tilting valve to protect against loss of leak detection fluid during transport and for venting on site. LAS 39 and 72 with G1 connection at the side for up to 4 additional containers with 4.5 litres each. The additional containers allow for leak detection at tanks with a greater interstitial space (see overview).

Overview LAS 72 with additional containers

Number of add. containers	Active volume LAS 72 and additional containers in litres	Max. leak detection fluid in the interstitial space in litres	To be used for tanks with a volume in litres up to
0	2.1 l	max. 72 l	approx. 7,000 l
1	6.6 l	max. 230 l	approx. 30,000 l
2	11.1 l	max. 387 l	approx. 50,000 l
3	15.6 l	max. 545 l	approx. 80,000 l
4	20.1 l	max. 700 l*	100,000 l

Values for LAS 39 on request.
* Design 1975–1985

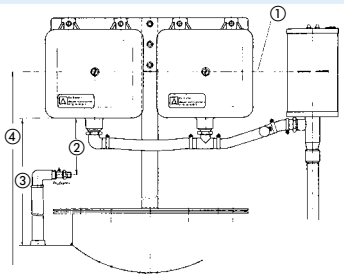

① Make sure to observe height
② Min. 100 mm
③ Min. 500 mm
④ Up to tank bottom max. 5 m

DG: H, PG: 3	Active volume	Interstitial space of tank	Max. no. of add. tanks	Part no.	**Price €**
LAS 24	0.7 l	max. 24 l	-	43515	
LAS 24 E	0.7 l	max. 24 l	-	**43516**	
LAS 24 EK	0.7 l	max. 24 l	-	**43517**	
LAS 39	1.1 l	max. 39 l	4	**43526**	
LAS 39 E	1.1 l	max. 39 l	4	43525	
LAS 72	2.1 l	max. 72 l	4	**43528**	
LAS 72 E	2.1 l	max. 72 l	4	**43527**	
LAS 230	6.6 l	max. 232 l	-	**43550**	
Mounting kit LAS 0 (test valve)	-	-	-	**43529**	
Mounting kit LAS 1*	-	-	-	43530	
Mounting kit LAS 2*	-	-	-	43531	
Mounting kit LAS 3*	-	-	-	43532	
Mounting kit LAS 4*	-	-	-	43533	

* Including the corresponding number of additional containers (Ex-Elstat I)

Leak detector LAG-13 KR

Class II, EN 13160-1/-3

- **Version as per WHG and BetrSichV**
- **For monitoring of aboveground, double-walled tanks**
- **With fail-safe mode**

A Page 49

A Page 49

Application

For double-walled tanks with liquid in the interstitial space. For monitoring water-polluting liquids with a flash point of | 55 °C stored aboveground. Approved for all suitable tanks under atmospheric conditions.

Since July 2003, the LAG-13 leak detector may only be used for replacement deliveries for underground, double-walled tanks as a result of the reclassification of water-polluting liquids in Germany.

Description

Non-intrinsically safe class II leak detector (EN 13160-1). Consisting of control unit, leak detection fluid container (LAG container white) and probe. Control unit with operating and alarm indicators, audible/visual alarm, test button and increased interference protection. The audible alarm can be muted with the Acknowledge button. The voltage-free relay contact is provided for connection of additional external alarm equipment (such as horns,) or an additional alarm unit ZAG 01. With fail-safe mode: Alarm is triggered if the probe fails. Suitable for panel mounting with a mounting frame; a sealing kit (IP 54) is available for rough application conditions. The LAG container serves as detection container and as expansion vessel at the same time. For aboveground tanks, the ratio between usable contents and total volume of leak detection fluid must be no more than 1:35. If the interstitial space has a greater volume, you must use additional containers.

Technical specifications

Operating temperature range
Ambient: -5/+50 °C
Storage: -10/+60 °C

Supply voltage
AC 230 V

Control unit
Wall mounting housing made of impact-resistant plastic (ABS)
W x H x D: 100 x 188 x 65 mm
Degree of protection: IP 30 (EN 60529)

Switching outputs
Relay outputs: 1 voltage free changeover contact
Contact rating: AC 250 V, 2A

Tanks
Plastic, white
W x H x D: 300 x 325 x 145 mm
Usable contents / total contents: 4.5 l / 10 l
Outlet: G¾
Degree of protection: IP 20 (EN 60529)

Approval for construction products
CE marking as per EC Construction Products Regulation 305/2011, EC 574/2014, EN 13160-1/-3 and ÜHP

DG: G	PG			Part no.	Price €
LAG-13 KR (not intrinsically safe), with container and probe	4	1	5	43500	
LAG container white without probe	1	1	-	40730	
Control unit LAG-13 KR	4	1	-	40630	
Accessories					
Mounting frame	1	1	-	43521	
Sealing kit (IP 54)	1	1	-	43416	
LAG mounting kit	1	1	-	40540	
Mounting kit for 1 additional LAG container (without container)	1	1	-	40539	
Leak detection fluid - concentrate	1	1	-	43645	

i

See page 49 for a detailed product description LAG container.

Leak detector LAG-14 ER

Class II, EN 13160-1/-3

- **ATEX approval**
- **Version as per German WHG and BetrSichV**
- **With fail-safe mode**
- **For monitoring of aboveground, double-walled tanks**

3

Page 49

Page 49

Page 86

Application

For double-walled tanks with liquid in the interstitial space. For monitoring water-polluting liquids stored aboveground. The LAG container can be installed in hazardous areas zones I and II (e.g. manhole of petrol tanks). Approved for all suitable tanks under atmospheric conditions.

Since July 2003, the LAG-14 leak detector may only be used for replacement deliveries for underground, double-walled tanks as a result of the reclassification of water-polluting liquids in Germany!

Description

Class II leak detector (EN 13160-1), with intrinsically safe probe circuit. The system consists of a control unit, a container for leak detection fluid (LAG container black) and a probe. Control unit with operating and alarm indicators, audible/visual alarm, test button and increased interference protection. The audible alarm can be muted with the Acknowledge button. The voltage-free relay contact is provided for connection of additional external alarm equipment (such as horns,) or an additional alarm unit ZAG 01. With fail-safe mode: Alarm is triggered if the probe fails. Suitable for panel mounting with a mounting frame; a sealing kit (IP 54) is available for rough application conditions. The LAG container serves as detection container and as expansion vessel at the same time. For aboveground tanks, the ratio between usable contents and total volume of leak detection fluid must be no more than 1:35. If the interstitial space has a greater volume, you must use additional containers.

Technical specifications

Operating temperature range
Ambient: -20/+50 °C
Storage: -20/+60 °C

Supply voltage
AC 230 V

Control unit
W x H x D: 100 x 188 x 65 mm
Degree of protection: IP 30 (EN 60529)

Switching outputs
Relay outputs: 1 voltage-free changeover contact
Contact rating: AC 250 V, 2A

Tanks
Antistatic plastic, black
W x H x D: 300 x 325 x 145 mm
Usable contents / total contents: 4.5 l / 10 l
Outlet: G¾
Degree of protection: IP 20 (EN 60529)

Approval for construction products
CE marking as per EC Construction Products Regulation 305/2011, EC 574/2014, EN 13160-1/-3 and ÜHP

ATEX approval
EX5 11 02 15639 011
Ex II (1) G [Ex ia] IIC

DG: G	PG			Part no.	**Price €**
LAG-14 ER with relay, including container and probe	4	1	5	**43410**	
LAG container black, without probe	1	1	5	**40731**	
Control unit LAG-14 ER	4	1	-	**40642**	
Accessories					
Mounting frame	1	1	-	**43521**	
Sealing kit (IP 54)	1	1	-	**43416**	

i See page 49 for a detailed product description LAG container.

Accessories for leak detectors

LAG container

Description

Detection container for LAG leak detectors. The LAG container also serves as an expansion vessel. For aboveground tanks, the ratio between usable contents and total volume of leak detection fluid must be no more than 1:35. If the interstitial space has a greater volume, you must use additional containers.

Since July 2003, the LAG-14 ER leak detector may only be used for replacement deliveries for underground, double-walled tanks as a result of the reclassification of water-polluting liquids in Germany.

LAG container black

Technical specifications

LAG container black
Suitable for LAG-14 ER, for all stored liquids
W x H x D: 300 x 325 x 145 mm
Usable contents / total contents: 4.5 l / 10 l
Outlet: G¾
Degree of protection: IP 20 (EN 60529)

LAG container white

Technical specifications

LAG container white
Suitable for LAG-13 K, for all liquids with a flash point > 55 °C
W x H x D: 300 x 325 x 145 mm
Usable contents / total contents: 4.5 l / 10 l
Outlet: G¾
Degree of protection: IP 20 (EN 60529)

LAG mounting kit

Description

For approved hydraulic mounting of leak detectors.

LAG mounting kit

Leak detection fluid concentrate

Description

For use with leak detectors for double-walled tanks. Concentrate for mixing the leak detection fluid for the interstitial space. 10 l container with 4 l leak detection fluid Antifrogen N (BAM no: 1.3/9790-5.1/3436), can be mixed with water to 8 l at up to -30 °C or 10 l up to -25 °C. Please enquire for larger containers.

Leak detection fluid - concentrate

Mounting frame and sealing kit

Description

Suitable for all wall mounting housings of the WATCHDOG-LINE series (alarm units). Mounting frame for fast integration into control cabinet. Sealing kit for rough application conditions. The sealing kit is easy to mount between the housing cover and base. This increases the degree of protection of the alarm unit to IP 54.

Mounting frame and sealing kit

DG: G, PG: 1			Part no.	**Price €**
LAG container white	1	1	**40730**	
LAG container black	1	1	**40731**	
LAG mounting kit	1	-	**40540**	
Mounting kit for 1 additional LAG container (container not included in scope of delivery)	1	1	**40539**	
Leak detection fluid - concentrate	1	-	**43645**	
Mounting frame	1	1	**43521**	
Sealing kit (IP 54)	1	1	**43416**	

Vacuum type leak detector Eurovac

Your benefits

- Leak detector class I, EN 13160-1/-2
- Modern housing design, in line with WATCHDOG-LINE alarm unit series
- Large supply voltage range (AC 100–240 V) for worldwide application
- With power outage monitoring (with optional 9 V battery)
- Indication of pump operating time
- Low-noise operation
- Electronic pressure sensor for permanently stable switching points
- Drilling template included – for easy and fast installation
- Relay output for additional signalling devices, additional alarm units, event reporting systems or for integration into building control systems
- Version in protective housing (IP 55), available with heating and/or horn

Eurovac in protective housing with heating and horn

EnOcean-ready

Can be combined with **EnOcean® wireless module TCM 320** for integration into building automation systems.

Robust wall mounting housing with hole pattern – suitable for most standard vacuum type leak detectors

High energy efficiency: economical, powerful DC motor with high starting torque

Control panel with visual/audible alarms and Acknowledge button

Service indicator for annual maintenance

Hose connections (Ø 4/6 mm) for the pneumatic connection to the interstitial space of the tank.

Supply voltage

Connection measuring line

Connection exhaust line

Connection suction line

Sintered plastic filter and condensate trap to indicate the current degree of pollution and to protect the pump

Vacuum type leak detector Eurovac NV

as per WHG and BetrSichV, class I, EN 13160-1/-2

- **With visual and audible alarms, Acknowledge button and switching output**
- **High energy efficiency: economical, powerful DC motor with high starting torque**
- **Service indicator for annual maintenance**
- **With power outage monitoring**

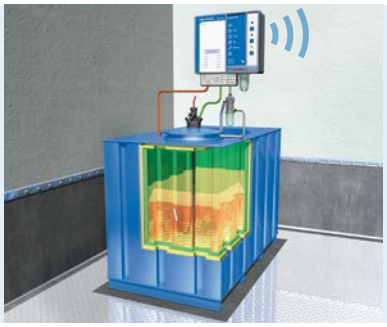

A Page 53

A Page 86

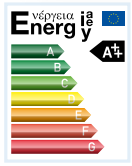

Application

Class I vacuum type leak detector according to EN 13160 for safe monitoring of double-walled tanks and single-walled tanks with inner lining for the storage of water-polluting liquids with a flash point > 55 °C as well as AdBlue® (urea solution 32.5 %) according to DIN 70070. The broad voltage range (AC 100–240 V) allows for application in a large variety of countries.

Description

Compact leak detector in a robust wall mounting housing with audible and visual alarms. The audible alarm can be muted with the Acknowledge button. Eurovac NV maintains a vacuum in the interstitial space of the tank (low vacuum range). The vacuum pump is operated by an economical DC motor with a high starting torque (energy efficiency class AA++). Eurovac features a switching output for additional equipment (such as additional alarm unit ZAG 01) or integration into building control systems. The pump operating time can be displayed.
Three hose connections (red, white, green) for the pneumatic connection to the interstitial space of the tank. The universal connection pieces can be used for 4 mm and 6 mm hoses.
With condensate trap to protect the electronics. Electrical connection from the top or from the bottom. An optional 9 V battery can be connected so that an alarm is triggered in the case of power outage. For outdoor applications, Eurovac NV is available in a protective housing (IP 55). Alarm units with the EnOcean-ready label allow for wireless integration into a building automation system. To do so, plug the EnOcean® wireless module TCM 320 into the EnOcean® interface (PCB of the device). The AFRISOhome gateway in conjunction with additional AFRISO Smart Home products with EnOcean® wireless technology allow you to configure a whole range of fully customisable, extensible features for the protection of plants and buildings.

Technical specifications

Operating temperature range
Ambient: -5/+50 °C
In protective housing with heating: -25/+50 °C

Supply voltage
AC 100–240 V

Nominal power
< 10 VA

Switching output
Relay contact: 1 voltage-free changeover contact

Contact rating
Max. 250 V, 2 A, resistive load

Operating pressure
Interstitial space: -70 mbar

Housing
Wall mounting housing made of impact-resistant plastic (ABS)
W x H x D: 202 x 230 x 70 mm
Degree of protection: IP 30 (EN 60529)

Alarm sound
Min. 70 dB(A)

Approval for construction products
CE marking as per EC Construction Products Regulation 305/2011, EC 574/2014, EN 13160-1/-2 and ÜHP

i

See page 57 for inner linings and mounting accessories.

See the catalogue PORTABLE MEASURING INSTRUMENTS, page 29, for testers for vacuum type leak detectors.

PG: 4	DG	Part no.	Price €
Eurovac NV (low vacuum)	H	**43755**	
Eurovac NV in protective housing (IP 55)	H	43788	
Eurovac NV in protective housing (IP 55) with horn	H	43782	
Eurovac NV in protective housing (IP 55) with heating	H	43792	
Eurovac NV in protective housing (IP 55) with heating and horn	H	43789	
EnOcean® wireless module TCM 320	G	**78082**	

Vacuum type leak detector Eurovac HV

as per WHG and BetrSichV, class I, EN 13160-1/-2

- **With visual and audible alarms, Acknowledge button and switching output**
- **High energy efficiency: economical, powerful DC motor with high starting torque**
- **Service indicator for annual maintenance**
- **With power outage monitoring**

Page 53

Page 86

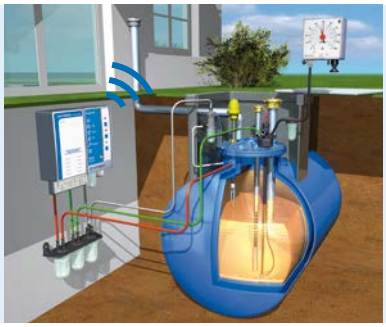

3

Application

Class I vacuum type leak detector according to EN 13160 for safe monitoring of double-walled tanks and single-walled tanks with inner lining for the unpressurised storage of water-polluting liquids with a flash point > 55 °C as well as AdBlue® (urea solution 32.5 %) according to DIN 70070. Eurovac HV enables monitoring of additional media (such as used oil, hydraulic oil, cooling agent from grinding processes, brake fluid, etc.). The broad voltage range (AC 100–240 V) allows for application in a large variety of countries.

Description

Compact leak detector in a robust wall mounting housing with audible and visual alarms. The audible alarm can be muted with the Acknowledge button. Eurovac HV maintains a vacuum in the interstitial space of the tank (high vacuum range). The vacuum pump is operated by an economical DC motor with a high starting torque (energy efficiency class AA++). Eurovac features a switching output for additional equipment (such as additional alarm unit ZAG 01) or integration into building control systems. The pump operating time can be displayed.
Three hose connections (red, white, green) for the pneumatic connection to the interstitial space of the tank. The universal connection pieces can be used for 4 mm and 6 mm hoses. With condensate trap to protect the electronics. Electrical connection from the top or from the bottom. An optional 9 V battery can be connected so that an alarm is triggered in the case of power outage. For outdoor applications, Eurovac HV is available in a protective housing (IP 55).
Alarm units with the EnOcean-ready label allow for wireless integration into a building automation system. To do so, plug the EnOcean® wireless module TCM 320 into the EnOcean® interface (PCB of the device). The AFRISOhome gateway in conjunction with additional AFRISO Smart Home products with EnOcean® wireless technology allow you to configure a whole range of fully customisable, extensible features for the protection of plants and buildings.

Technical specifications

Operating temperature range
Ambient: -5/+50 °C
In protective housing with heating: -25/+50 °C

Supply voltage
AC 100–240 V

Nominal power
< 10 VA

Switching output
Relay contact: 1 voltage-free changeover contact

Contact rating
Max. 250 V, 2 A, resistive load

Operating pressure
Interstitial space: approx. -400 mbar

Housing
Wall mounting housing made of impact-resistant plastic (ABS)
W x H x D: 202 x 230 x 70 mm
Degree of protection: IP 30 (EN 60259)

Alarm sound
Min. 70 dB(A)

Approval for construction products
CE marking as per EC Construction Products Regulation 305/2011, EC 574/2014, EN 13160-1/-2 and ÜHP

i

See page 59 for inner linings and a complete range of mounting accessories.

See the catalogue PORTABLE MEASURING INSTRUMENTS, page 31, for testers for vacuum type leak detectors.

PG: 4	DG	Part no.	Price €
Eurovac HV (high vacuum)	H	**43750**	
Eurovac HV in protective housing (IP 55) without heating, without horn	H	43774	
Eurovac HV in protective housing (IP 55) without heating, with horn	H	43776	
Eurovac HV protective housing (IP 55) with heating, without horn	H	43793	
Eurovac HV in protective housing (IP 55) with heating and horn	H	43781	
EnOcean® wireless module TCM 320	G	**78082**	

Protective equipment for Eurovac leak detectors

Liquid barrier

Application

For increased reliability and for the protection of vacuum type leak detectors.

Description

Liquid barrier with condensate trap for visual inspection, complete with fixing bracket for easy mounting to manhole cover. The liquid barrier is mounted directly into the suction line between the leak detector and the double-walled tank. The liquid carried in the suction line (condensate or, in the event of a leak, the medium or groundwater) is collected in the condensate trap of the liquid barrier. An integrated float shuts off the suction line if too much liquid is contained in the liquid barrier. The condensate trap can be easily unscrewed for emptying.

- Tightness-tested
- Compact, robust design made of high-strength plastic
- Compatible with hoses with 4/6 mm inside diameter

Technical specifications

Hose connection
Interchangeable Ø 4 or 6 mm

Housing
Plastic

Scope of delivery
- Liquid barrier with condensate trap
- Mounting bracket
- Hose connection Ø 4/6 mm

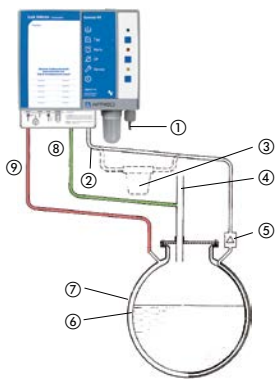

Mounting diagram

① Electrical connection
② Suction line (crystal)
③ Condensate trap/bar
④ Tank vent
⑤ Liquid barrier
⑥ Interstitial space
⑦ Outer tank wall
⑧ Vent line (green)
⑨ Measuring line (red)

Condensate bar

For the protection of vacuum type leak detectors used on double-walled tanks to avoid ingress of condensate liquid into the device or clogging of hoses.

Condensate bar with three condensate traps for visual inspection, with integrated bracket for easy wall mounting. If there is no steady gradient in the measuring, exhaust and suction lines from the leak detector to the tank, a condensate bar must be mounted at each lowest point of the lines. When condensate forms, the liquid is collected in the relevant condensate trap. The condensate traps can be easily unscrewed for emptying.

- Tightness-tested
- Compact, robust design made of high-strength plastic
- Compatible with hoses with 4/6 mm inside diameter

Hose connection
Ø 4 and 6 mm

Housing
Plastic

Scope of delivery
Condensate bar with 3 condensate traps

DG: H, PG: 1			Part no.	Price €
Liquid barrier	1	1	43646	
Condensate bar	1	20	43692	

Spare parts for leak detectors

When ordering spare parts, please specify the unit designation (refer to type designation plate on the control unit). Spare parts for discontinued models are also listed. Visit www.afriso.com for additional spare parts lists.

LAG spare parts

DG: G	PG			Part no.	**Price €**
LAG probe, plug-in connection, for LAG 13 and LAG 14	1	1	-	**40510**	
Foil keypad for control units 1996 and later	4	1	-	**18 05 000002**	
Foil keypad for control units 2007 and later	4	1	-	**18 05 000003**	
Spare parts LAG mounting kit					
Test valve plastic, complete	1	1	-	**40555**	
Hose connection G1 (angled)	1	1	-	**40557**	
Hose nipple G¾	1	1	-	**40558**	
Hose EPDM 14 x 3 (coil with 10 m)	1	1	-	**40543**	

LAZ spare parts

DG: H	PG			Part no.	**Price €**
"Alarm" indicator lamp LAZ-04 (red)	4	1	-	**43658**	
"Operation" indicator lamp LAZ-04 (green)	4	1	-	**43661**	

Eurovac/Europress spare parts

DG: H	PG			Part no.	**Price €**
Pump with motor Eurovac HV	4	1	-	**43777**	
Pump with motor Eurovac NV	4	1	-	**43783**	
Foil keypad Eurovac / Europress	4	1	-	**18 05 000004**	

Tank protection package AK-S for fuel oil and diesel – Inner linings with complete accessories

as per EN 13160-7

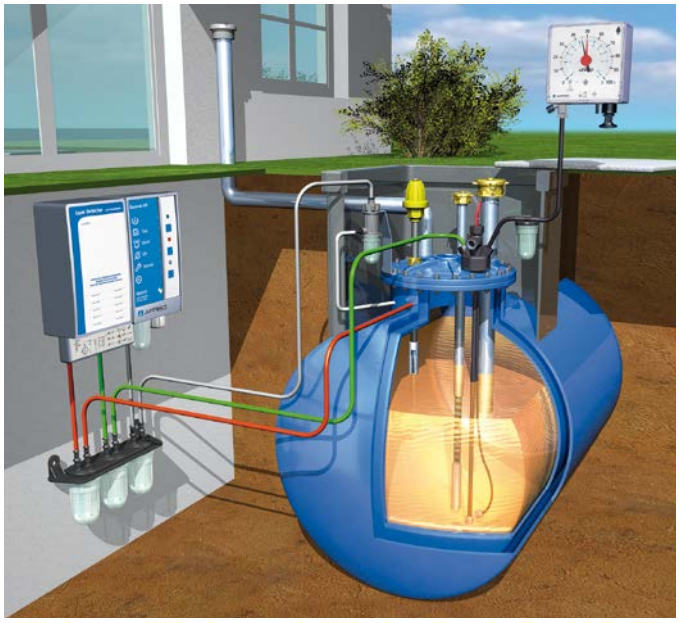

Application

For fuel oil EL (DIN 51603-1), diesel fuel (EN 590) and biofuel as well as biodiesel with up to 20 % FAME.

Description

Tank protection package for standardised cylindrical tanks. Enquire for rectangular and spherical tanks.

Approval for construction products

DIBt: Z-65.30-162,
EN 13160-7

Scope of delivery

- Leak protection lining according to standard or made to size
- Vacuum type leak detector Eurovac
- Front wall lining made of fleece LSV2
- Intermediate layer made of fleece
- Mipoplast plate 800 x 800 mm
- Condensate bar triple 4/6 mm
- Liquid barrier 4/6 mm
- Angled nipple short 4/6 mm
- Angled nipple long 4/6 mm
- PVC suction line 3 x 6 mm perforated and not perforated
- Fastening ring 500 mm or 600 mm
- Hose connector 4 or 6 mm
- T piece hose connection 4 or 6 mm
- Hose connector kit G⅜ x G½ x G¾ mm
- Warning sign with holder and felt overshoes

AK-S for cylindrical, standard tanks (EN/DIN)

DG: H, PG: 1	Part no.	**Price €**
3,000 l	43901.003	
5,000 l	43901.005	
7,000 l	43901.007	
10,000 l	43901.010	
13,000 l	43901.013	
15,000 l	43901.015	
16,000 l	43901.016	
20,000 l	43901.020	
25,000 l	43901.025	
30,000 l	43901.030	
40,000 l	43901.040	
50,000 l	43901.050	
60,000 l	43901.060	
80,000 l	43901.080	
100,000 l	43901.100	

i

On request:
- Dimensional drawings for customised inner linings
- Tank protection packages for rectangular and spherical tanks
- Training seminars on installation of inner linings and leak detectors

Inner linings AF-S for the storage of liquid fertiliser AHL, AdBlue®

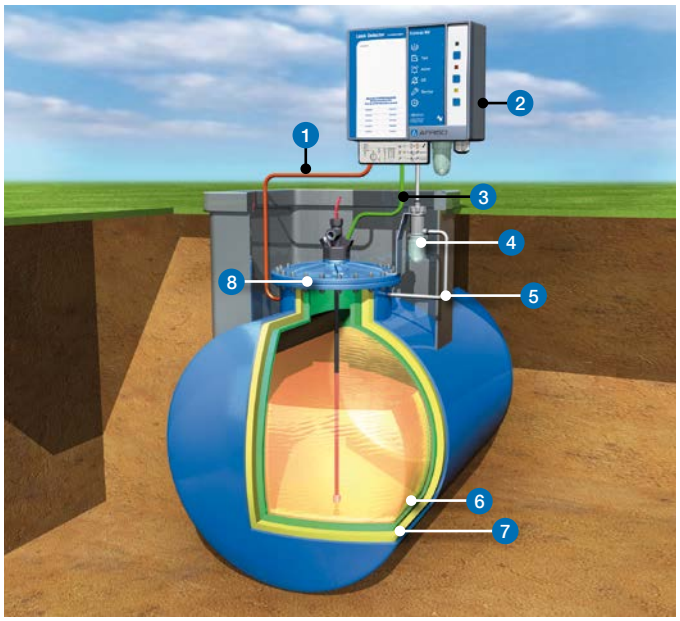

1 Measuring line
2 Eurovac leak detector
3 Exhaust line
4 Liquid barrier
5 Suction line/suction line perforated
6 Inner lining
7 Intermediate layer (fleece)
8 Fastening ring

Application

For liquid fertiliser AHL and urea solution 32.5 % AdBlue®. Enquire for other liquids.

Description

Plastic inner linings, blue, with Technical Approval of the German Institute for Civil Engineering (DIBt) for cylindrical standard tanks, rectangular tanks consisting of steel, glass fibre reinforced or asbestos cement manufactured on site. Made of PVC film WP6120, 0.8 mm thick.

When AdBlue® is stored, the surface temperature must not exceed 35 °C!

Approval for construction products

DIBt: Z-65.30-483

DG: H, PG: 1	Part no.	Price €
Inner linings for AHL and AdBlue® for rectangular tanks per m²	43870	
Stainless steel fastening ring V2A flat steel (without seal), 40 x 8 mm, glass bead blasted, 500 mm diameter.	43900N	
Stainless steel fastening ring V2A flat steel (without seal), 40 x 8 mm, glass bead blasted, 600 mm diameter.	43900O	

Inner linings for AHL and AdBlue® for cylindrical standard tanks (EN/DIN)

DG: H, PG: 1	Part no.	Price €
3,000 l	43880.003	
5,000 l	43880.005	
7,000 l	43880.007	
10,000 l	43880.010	
13,000 l	43880.013	
15,000 l	43880.015	
16,000 l	43880.016	**on request**
20,000 l	43880.020	
25,000 l	43880.025	
30,000 l	43880.030	
40,000 l	43880.040	
50,000 l	43880.050	
60,000 l	43880.060	
80,000 l	43880.080	
100,000 l	43880.100	

*Please enquire for larger linings and other shapes.
Scope of delivery does not include accessories.

i

On request:
- Dimensional drawings for customised inner linings
- Complete tank protection packages
- Training seminars on installation of inner linings and leak detectors

Inner linings AR-S for rainwater harvesting

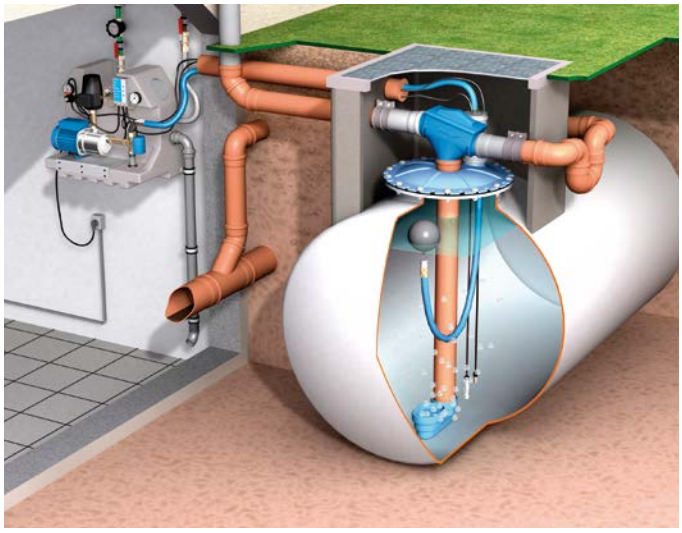

Application

When old heating oil storage tanks are taken out of service, for example due to corrosion, or if the heating system is converted to other types of fuel, the existing tanks can be used to collect rainwater. For integration into a rainwater harvesting system, the tank is cleaned and then fitted with a special inner lining suitable for water. The old, standardised manhole cover (Ø 500 mm) is replaced with a plastic cover specially designed for rainwater harvesting.

Description

Plastic inner linings for rainwater tanks. For hygienic sealing of cylindrical or rectangular tanks to be used in rainwater harvesting systems. Please enquire for inner linings for spherical tanks, cisterns, cesspits and other containers. It is advisable to install a vacuum type leak detector, but this is not mandatory in the case of cylindrical tanks.

Inner lining for rainwater for cylindrical tanks *

DG: H, PG: 1	Part no.	**Price €**
3,000 l	43887.003	
5,000 l	43887.005	
7,000 l	43887.007	
10,000 l	43887.010	
13,000 l	43887.013	
15,000 l	43887.015	
16,000 l	43887.016	
20,000 l	43887.020	
25,000 l	43887.025	
30,000 l	43887.030	
40,000 l	43887.040	**on request**
50,000 l	43887.050	
60,000 l	43887.060	
80,000 l	43887.080	
100,000 l	43887.100	

* Scope of delivery does not include accessories.

Other tanks, cisterns, cesspits, etc. can also be sealed and converted to hygienic storage facilities by means of internal linings. Please enquire.

Inner lining for rainwater for rectangular tanks *

DG: H, PG: 1	Part no.	**Price €**
3,000 l	43888.003	
4,000 l	43888.004	
5,000 l	43888.005	
6,000 l	43888.006	
7,000 l	43888.007	
8,000 l	43888.008	
9,000 l	43888.009	
10,000 l	43888.010	
11,000 l	43888.011	**on request**
12,000 l	43888.012	
13,000 l	43888.013	
14,000 l	43888.014	
15,000 l	43888.015	
16,000 l	43888.016	
17,000 l	43888.017	
18,000 l	43888.018	
19,000 l	43888.019	
20,000 l	43888.020	

* Scope of delivery does not include accessories.

See page 59 for accessories, see page 295 for plastic manhole cover.

Rainwater inner lining AR-SM with magnets

- **Operation without vacuum type leak detector, no pressure, no current**
- **Easy and fast installation by means of powerful neodymium magnets**
- **Perfectly fitting, robust PVC lining**

A
Page 295

Application

For converting cylindrical steel DIN tanks such as decommissioned fuel oil tanks, diesel tanks or storage tanks into reliable, high-grade rainwater storage tanks. No pressure or flow required. The rainwater inner lining AR-SM with magnets is suitable for storing rainwater in cylindrical steel tanks (3,000 to 60,000 litres).

Description

The new rainwater inner lining AR-SM (patent pending) with magnets allows owners to convert a decommissioned steel tank into a rainwater storage tank with very little effort.
Please note: In the case of coated steel tanks, verify that the attractive force of the magnets is sufficient.

The rainwater inner lining AR-SM is a PVC lining with flat, round, extremely powerful neodymium magnets welded into lateral and top areas. The lining is reliably held at the inner wall by the magnets - no pressure or flow are required inside the tank. A tank can be conveniently converted into a rainwater storage tank: First, the tank is measured and then a precisely fitting lining is manufactured. The tank is prepared on the basis of a defined procedure (thorough cleaning of the tank, corrosion checks, etc.); depending on the condition of the tank, a fleece layer is placed on the tank floor for impact protection.

Then the lining is fitted in the tank and inflated by means of a blower; if necessary, the final fit is achieved by means of a vacuum pump. When the PVC lining is inflated, the magnets click into place exactly where planned. The fit of the PVC lining is checked and then it is fastened in the manhole by means of a fastening ring. The tank is ready for storing rainwater immediately after the lining has been installed.

Scope of delivery

Rainwater inner lining AR-SM, made of plastic film Sikaplan® WP5140-08 black, film thickness 0.8 mm, for closed tanks, with all neodymium magnets welded into the film in the lateral and top areas, with film flange for the standard fastening ring.

i

Not only cylindrical DIN steel tanks, but certain steel tanks with different geometrical shapes can be converted into rainwater storage tanks.
Please enquire.

i

Depending on the local conditions and on the tank, a fleece lining may be required in the bottom area of the tank as an impact protection. Different dome distances and special dimensions are manufactured at the same conditions.

	PG	Part no.	**Price €**
Extra charge for additional access chamber			
500 mm	1	08027	**net**
600 mm	1	08024	**net**
Accessories (DG: H)			
Fastening ring Ø 500 mm	3	43900A	
Fastening ring Ø 600 mm	3	43900C	
Fleece LSV2 1 x 2 m plate	1	43952	

DG: H, PG: 1	Part no.	**Price €**
3,000 l	43889.003	
5,000 l	43889.005	
7,000 l	43889.007	
10,000 l	43889.010	
13,000 l	43889.013	
15,000 l	43889.015	
16,000 l	43889.016	
20,000 l	43889.020	
25,000 l	43889.025	
30,000 l	43889.030	
40,000 l	43889.040	
50,000 l	43889.050	
60,000 l	43889.060	

Mounting accessories for inner linings

RK: H	Designation	Specification	PG			Part no.	Price €
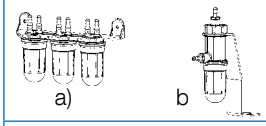 a) b	a) Condensate bar	Connections 4/6 mm	1	1	-	43692	
	b) Liquid barrier with condensate trap and fastening bracket	Connections 4/6 mm	1	1	-	43646	
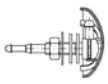	Angled nipple with spacer	6 x 4/6 mm	2	1	-	43904	
a) 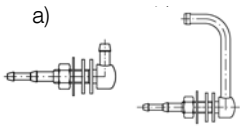	a) Angled nipple short	6 x 4/6 mm	2	1	25	43906	
	b) Angled nipple long	6 x 4/6 mm	2	1	10	43908	
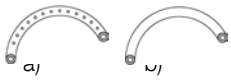 a) b)	a) Suction line perforated (roll of 100 m)	6 x 3 mm	1	1	-	43910	
	b) Suction line not perforated (roll of 100 m)	6 x 3 mm	1	1	-	43911	
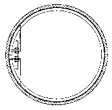	Fastening ring with round seal, foam rubber	Ø 500 mm	3	1	-	43900A	
		Ø 550 mm	3	1	-	43900B	
		Ø 600 mm	3	1	-	43900C	
		Ø 620 mm	3	1	-	43900D	
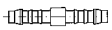	Hose connector for suction hose	4 x 4 mm	1	1	25	43945	
		6 x 6 mm	1	1	25	43912	
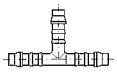	T piece for suction hose	4 x 4 x 4 mm	1	1	25	43944	
		6 x 6 x 6 mm	1	1	25	43913	
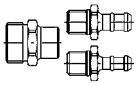	Hose connector kit ND 4/6, G⅜ x G⅛	ND 4 x G⅛ ND 6 x G⅛ G⅜ x G⅛	1	1	25	43914	
	Plate holder	with plate and clamp	3	1	-	43918	
	PVC hose red 100 m	4 x 2 mm	1	1	-	43648	
		6 x 2 mm	1	1	-	43662	
	PVC hose green 100 m	4 x 2 mm	1	1	-	43649	
		6 x 2 mm	1	1	-	43663	
	PVC hose transparent 100 m	4 x 2 mm	1	1	-	43650	
		6 x 2 mm	1	1	-	43664	
	Sealing material 1 kg Glue 0.9 kg	Epple 28	1	1	-	43919	
		Epple 4851	1	1	-	43920	
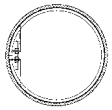	Stainless steel fastening ring	V2A flat steel (without seal), 40 x 8 mm, glass bead blasted, 500 mm diameter.	3	1	-	43900N	
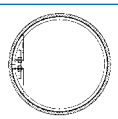	Stainless steel fastening ring	V2A flat steel (without seal), 40 x 8 mm, glass bead blasted, 600 mm diameter.	3	1	-	43900O	
	Flanges	KT NW 65	3	1	-	44006	
		KT G2	3	1	-	44007	
	Foam rubber roll 10 m	50 x 5 mm	1	1	-	43926	
	Foam rubber roll 10 m	50 x 8 mm	1	1	-	43942	
	Mipoplast bottom plate	800 x 800 mm	1	1	-	43928	

Pressure type leak detector Europress

as per WHG and BetrSichV, class I, EN 13160-1/-2

- **With visual and audible alarms, Acknowledge button and switching output**
- **Pump operating time can be displayed**
- **Service indicator for annual maintenance**
- **With power outage monitoring**

Europress in protective housing

3

Page 86

Application

Pressure type leak detector according to EN 13160 (class I) for safe monitoring of double-walled tanks for the unpressurised storage of water-polluting liquids, AdBlue® (urea solution 32.5 %). The flexible voltage supply (AC 100–240 V) allows for application in a large variety of countries.

Description

Compact leak detector in a robust wall mounting housing with audible and visual alarms. The audible alarm can be muted with the Acknowledge button. Europress indicates the pump operating time and features a switching output for additional equipment (such as additional alarm unit ZAG 01) or integration into building control systems. The pump operating time can be displayed. Three hose connections (red, white, green) for the pneumatic connection to the interstitial space of the tank. The universal connection pieces can be used for 4 mm and 6 mm hoses.
With condensate trap to protect the electronics. Electrical connection from the top or from the bottom. An optional 9 V battery can be connected so that an alarm is triggered in the case of power outage. For outdoor applications, Europress is available in a protective housing (IP 55). Alarm units with the EnOcean-ready label can be integrated into your existing building automation systems at a later point in time. To do so, plug the EnOcean® wireless module into the EnOcean® interface (PCB of the device). The AFRISOhome gateway in conjunction with additional AFRISO Smart Home products with EnOcean® wireless technology allow you to configure a whole range of fully customisable, extensible features for the protection of plants and buildings.

Technical specifications

Operating temperature range
Ambient: -5/+50 °C
In protective housing with heating: -25/+50 °C

Supply voltage
AC 100–240 V

Nominal power
< 10 VA

Switching output
Relay contact: 1 voltage-free changeover contact

Contact rating
Max. 250 V, 2 A, resistive load

Operating pressure
Interstitial space: approx. 530 mbar

Housing
Wall mounting housing made of impact-resistant plastic (ABS)
W x H x D: 202 x 230 x 70 mm
Degree of protection: IP 30 (EN 60259)

Alarm sound
Min. 70 dB(A)

Approval for construction products
CE marking as per EC Construction Products Regulation 305/2011, EC 574/2014, EN 13160-1/-2 and ÜHP

Drying filter TF 220

PU: 1	DG	PG	Part no.	Price €
Europress	H	4	**43790**	
Europress in protective housing (IP 55) with horn	H	4	43795	
Europress in protective housing (IP 55) with horn and heating	H	4	43796	
Europress with filter, pipe clamp PG42 and drying beads	H	4	**43701**	
Mounting kit	H	1	**43704**	
Drying filter TF 220 with pipe clamp PG42	H	1	**43688**	
Drying beads, 850 ml	H	1	**69226**	
Connection piece G1 x ND 4/6 mm	H	1	**43698**	
EnOcean® wireless module TCM 320	G	4	**78082**	

Gas detectors

Oil and water
Alarm units

Signalling devices

CHAPTER 4

Alarm units, probes and signalling devices

OVERVIEW

WATCHDOG/LINE alarm units for fast detection 64

Alarm units at a glance 66

ALARM UNITS FOR OIL/WATER

Oil/water alarm unit ÖWWG 3 69

Oil/water alarm unit ÖWWG 3 with burner connection kit 70

Oil/water alarm unit OM 5 71

Water alarm unit ÖWU for separate detection of oil and water ÖWU 72

Oil-on-water detector ÖAWD-8 73

ALARM UNITS FOR OIL

Fuel oil alarm unit HMS 74

ALARM UNITS FOR WATER

Water alarm unit WWG 75

Leak detectors CoFox® ELT 500/4, ELT 8 76

ALARM UNITS FOR GAS/SMOKE

Gas alarm unit GS 1.1 77

Gas alarm unit GS 2.1, external gas sensor GS 4.1 78

Gas detector GM 2.1 79

Gas sensors GS 4.1 for GM 2.1 80

Test gas bag PGT 10 80

ACCESSORIES

Floor water probe BWS 10-1, wall mounting rail probe WSS, floating probe SWS 81

PTC thermistor probe, photoelectric probe, EnOcean® wireless module TCM 320 82

Drip pan, mounting frame, seal kit IP 54, DIN rail clip 83

SIGNAL PROCESSING

Signalling devices: Combined warning light and horn WLH 1, horn KH 1 84

Signalling devices: Horn HPW 2, warning light with rotating reflector SLD 1 85

Additional alarm unit ZAG 01 for alarm units 86

Alarm units for fast detection of levels, accumulations of liquids, leakage, gases or smoke

WATCHDOG-LINE – for maximum safety

1. Oil water alarm unit OM 5 with EnOcean® wireless module TCM 320 for integration into smart home systems
2. Photoelectric probe for tank room monitoring
3. Photoelectric probe with drip pan
4. Wireless smoke detector ASD 10
5. Digital tank contents indicator DTA 20 E (wireless)

In the building technology sector, there are many risks which should be monitored to avoid annoyance to home owners, janitors, property managers or maintenance personnel and to avert extensive damage. WATCHDOG-LINE alarm units report undesirable events, danger and emergency conditions early so that immediate measures can be taken.
The WATCHDOG-LINE devices excel with easy and intuitive operation. A large variety of probes and sensors enable fast detection of liquid levels, leakage and accumulations of liquids, gases or smoke. Integrated visual and audible alarms provide the appropriate signals in hazard conditions. For remote signalling and easy integration into the AFRISO Smart Home system, they are ready for the installation of an EnOcean® wireless module. This way, the persons in charge can be notified of an alarm condition – whether or not they have a mobile device. Residential buildings, factories and facilities are protected and monitored.
From standard wall mounting to integration into control cabinets using mounting frames – AFRISO-LINE alarm units are easy and quick to install. With very little effort, the devices can also be retrofitted with seal kits for use in rough dirty and wet environments (IP 54).

DIN rail clip for fast and easy mounting of the alarm units.

Fast integration into control cabinets by means of mounting frames.

With seal kit IP 54 for rough application conditions.

WATCHDOG-LINE alarm units

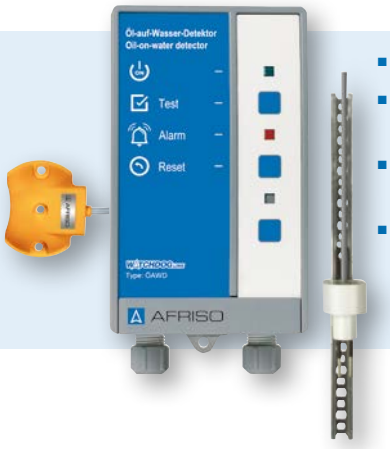

- **Audible and visual alarms for maximum safety**
- **Additional signalling devices (ZAG 01, horn, warning light) can be connected**
- **Ready-to-connect device for easy installation and commissioning**
- **High reliability and long service life**

A Page 84
A Page 83
A Page 82

4

Typical application areas

- Collection facilities below oil and water consuming equipment
- Drip pans below storage tanks, burners or motors in buildings or outdoors
- Containers, barrels and tanks/ double-walled tanks
- Sewage tanks
- Cisterns and water storage tanks
- Drinking water installations
- Oil depots, boiler rooms and rooms with mains water connection
- Heating systems
- Cable and pipe ducts
- Canal shafts, manholes and inspection ducts
- Cellars, kitchens, laundry rooms
- Warehouses and storage areas
- Machinery rooms
- Museums, archives, office buildings
- Lift shafts
- High-tech equipment rooms and server rooms
- Pumping stations and control rooms
- Catchment and overflow basins
- Flood risk areas
- Oil, petrol and grease separators
- Protective pipes and pipelines

Detectable media

- Water, waste water, groundwater
- Heating circuit water
- Cooling water
- Rainwater
- Fuel oil EL, L, M
- Diesel fuels or low-viscosity lubricating oils class A III
- Motor oils, gearbox oils and hydraulic oils
- Vegetable oils and transformer oils
- Beverages
- Antifreeze agents and fertilisers
- Emulsions
- Sludge, sand
- Oil, petrol and grease layers
- Conductive water mixtures and liquids
- Gases, vapours, smoke
- Many other liquids with a flash point of > 55 °C.

i

Pluggable EnOcean® wireless module TCM 320 for WATCHDOG-LINE PCBs, can be ordered separately for EnOcean-ready products.

WATCHDOG-LINE alarm units at a glance

Alarm unit	Probe	Media	Application	Catalogue page
Water alarm unit WWG enocean	Wall mounting rail probe **WSS** 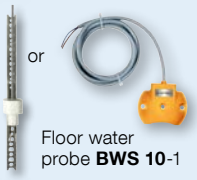 or Floor water probe **BWS 10**-1	▪ Water ▪ Conductive water mixtures ▪ Electrically conductive liquids ▪ Emulsions	**1 channel** Suitable for water, but also for electrically conductive liquids, emulsions and conductive water mixtures. **EnOcean®-ready**	Page 75
Oil/water alarm unit ÖWU enocean	Wall mounting rail combination probe	▪ Oil + water	**1 channel** ÖWU distinguishes oil alarms and water alarms and indicates the appropriate alarm condition. **EnOcean®-ready**	Page 72
Oil/water alarm unit ÖWWG 3 enocean	PTC thermistor probe	▪ Electrically conductive and non-conductive liquids	**1 channel** ÖWWG 3 generates alarms in the event of accumulations of liquids caused by tank leaks, backflow, flooding, etc. **EnOcean®-ready** **Approval for construction products:** DIBt: Z-65.40-339	page 69
Oil-on-water detector ÖAWD-8	Floating probe SWS	▪ Oil on water	**1 channel** ÖAWD monitors standing water and calmly flowing bodies of water/ water surfaces for pollution by oil.	Page 73
Oil/water alarm unit OM 5*	Photoelectric probe	▪ Oil ▪ Water	**5 channel** For collection facilities below oil consuming equipment, pipe and cable ducts, pumps and control stations and tanks. **Approval for construction products:** DIBt: Z-65.40-214	Page 71
Digital tank contents indicator DTA 10/ DTA 20 E enocean	Pneumatic measuring line	▪ Fuel oil ▪ Diesel fuel ▪ Water ▪ Non-corrosive media (density 0.5 to 1.5 g/cm³)	**1 channel** For manual level measurement and signalling of a minimum level during measurements – battery-operated. **DTA 20 E EnOcean®-inside**	Page 12 and Page 98
Level indicator TankControl 10	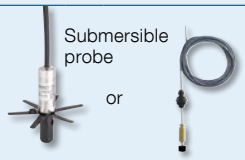 Submersible probe or Magnetic float switch	▪ Fuel oil EL, L ▪ Diesel fuel ▪ Biodiesel ▪ Water	**Single-channel/dual-channel** For continuous level measurement and alarms in the event of minimum or maximum levels, level differences, backwater and level control.	Page 14
Level switches Minimelder / Maximelder enocean	Magnetic float switch	▪ Water ▪ Fuel oil EL, L, M ▪ Oil/water mixtures ▪ Neutral liquids	**1 channel** Suitable to signal minimum or maximum levels in tanks containing liquids. **EnOcean®-ready**	Page 18

* Use as leak detection system class III as per EN 13160-1/-4

Alarm unit	Probe	Media	Application	Catalogue page
Backup controller RENA	Level probe	▪ Rainwater	**1 channel** Controls backup supply of mains water if the rainwater level is low.	Page 297
Water valve WaterControl 01 enocean	**WaterSensor con** **Water Sensor BWS** **WaterSensor eco** Battery-less	▪ Water ▪ Rainwater	**Multi-channel** For manually or remotely controlled closing and opening of a water pipe in the case of a leak. Teach-in of up to 40 sensors **EnOcean®-inside**	Page 96
Overfill prevention system UFS 01 (WHG)	Level probe type 76 A	▪ Water-polluting liquids (flash point > 55 °C)	**1 channel** Signals when the maximum level in stationary tanks is reached. **Approval for construction products:** DIBt: Z-65.11-193	Page 38
Leak detector LAG as per German WHG and BetrSichV	Leak detection fluid container with probe	▪ Water-polluting liquids	**1 channel** Leak detector for double-walled tanks with liquid in the interstitial space. **Approval for construction products:** CE marking as per EC Construction Products Regulation 305/2011, EU 574/2014, EN 13160-1,-3 and ÜHP	Page 47
Boiler water low level alarm WMS	Probe WMS	▪ Water in boiler	**1 channel** Monitors the water level in the boiler and interrupts the power supply to the burner if the level is below the minimum value. **Mark of conformity:** TÜV HWB 14-345 and 14-348	Page 155
Gas detector GM 2.1	Gas sensor GS 4.1	▪ Explosive gases ▪ Vapours	**Dual-channel** Suitable for monitoring rooms, buildings and public	Page 79
Alarm unit for low gas level	Pressure gauge with electrical contacts	▪ Gases	**1 channel** Alarm unit for low gas level for monitoring the pressure in gas-filled containers.	Page 118
Alarm units WGA for separators	WGA-ES8 (ultrasound, only for WGA 01 D) WGA-ES4 (capacitance) PTC thermistor probe WGA-R6	▪ Oil ▪ Petrol ▪ Grease ▪ (Sludge, sand)	**Devices with 1 channel / 2 channels / 3 channels** Monitor, for example, the layer thickness and the maximum level of separated liquid in oil, petrol and grease separators.	Page 337

4

Application examples WATCHDOG-LINE alarm units

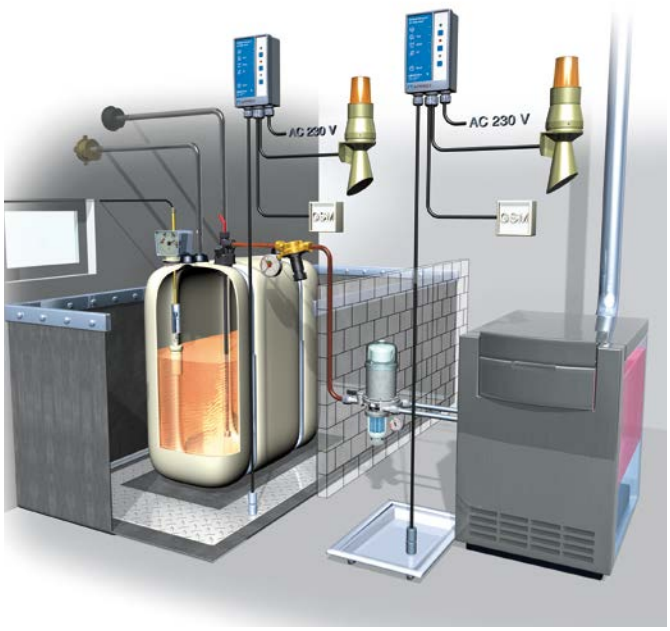

Leak detection in tank and heating rooms with ÖWWG 3.

When the maximum level in the catchment basin is reached, the WWG alarm unit controls the draining process by means of a connected pump.

AFRISO Smart Home: Monitoring and control of domestic equipment, apartments and buildings for function and leaks with the AFRISOhome gateway. Interconnected sensors, actuators and alarm units increase safety and convenience.
Application examples: Heating systems, laundry rooms, basements, utility rooms and drinking water installations.

Warning system (water leaks, flooding) for complete buildings with central alarm CoFox®.

Oil/water alarm unit ÖWWG 3

Class III, EN 13160-1, -4

- **For storage rooms, manholes, drip pans**
- **With visual/audible alarms, Test/ Acknowledge buttons and relay output**
- **Self-monitoring probe**
- **EnOcean®-ready**

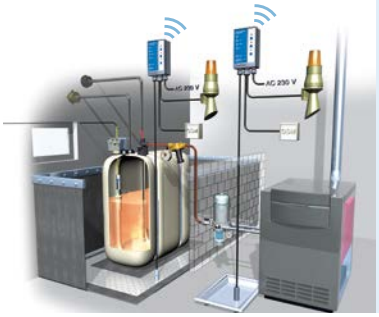

A Page 83 | A Page 84 | A Page 86

Applications

For visual and audible alarms if liquids with a flash point of > 55 °C are detected in, for example, oil storage rooms, drip pans, inspection ducts, ducts, protective pipes, manholes, pipes and cellars. Suitable for the following media: water, fuel oil, diesel fuel or low-viscosity lubricating oils, motor oils, hydraulic oils, vegetable oils and transformer oils, antifreeze agents, oil-water mixtures and emulsions. Use as leak detection system class III as per EN 13160-1/-4 and as leak detection system as per TRWS 791-1/-2.

Description

The oil/water alarm unit in a wall mounting housing triggers visual and audible alarms in the event of accumulations of liquids which can be caused by tank leaks, backflow, flooding, etc. ÖWWG 3 consists of a control unit with visual/audible alarm, Test and Acknowledge buttons as well as a flexible PTC thermistor probe. The probe is mounted at the lowest point of the area to be monitored. The alarm is triggered when the probe comes into contact with liquid. The audible alarm can be muted with the Acknowledge button. The visual alarm remains active until the leak has been removed. The Test button allows you to simulate an alarm condition in order to perform a function check. The self-monitoring probe triggers an alarm if it is damaged. The voltage-free relay contact is provided for connection of additional alarm equipment (such as additional alarm unit ZAG 01). ÖWWG 3 is suitable for panel mounting with a mounting frame. A sealing kit (IP 54) is available for rough application conditions. Alarm units with the EnOcean-ready label can be integrated into your existing building automation systems (e. g. AFRISO Smart Home) at a later point in time. To do so, plug the EnOcean® wireless module into the EnOcean® interface (PCB of the device).

Technical specifications

Operating temperature range
Ambient: -5/+40 °C

Probe
L x Ø: 57 x 14 mm
Cable length: 3.2 m or 10 m

Supply voltage
AC 100–240 V or AC/DC 15–40 V

Nominal power
10 VA

Switching output
Relay contact: 1 voltage-free changeover contact

Alarm sound
Min. 70 dB (A)

Housing
Wall mounting housing made of impact-resistant plastic (ABS)
W x H x D: 100 x 188 x 65 mm
Degree of protection: IP 40 (EN 60529)

Approval for construction products
DIBt: Z-65.40-339

Scope of delivery
- Control unit
- PTC thermistor probe
  Part no. 44510/44488: 3.2 m
  Part no. 44494: 10 m

Option
- EnOcean® wireless module (can be retrofitted)

DG: G, PG: 4		Probe length	Part no.	**Price €**
Oil/water alarm unit ÖWWG 3	AC 100–240 V	3.2 m	**44510**	
		10 m	**44494**	
	AC/DC 15–40 V	3.2 m	44488	
Spare probe ÖWWG 3, length 3.2 m, 09/2013 and later			**44516**	
Spare probe ÖWWG 3, length 10 m, 09/2013 and later			**44484**	
Spare probe ÖWWG 3, length 25 m, 09/2013 and later			**44482**	
Spare probe ÖWWG 3, length 3.2 m, up to 08/2013			**44481**	
Probe fuse			**44495**	
Mains fuse			**10820**	
EnOcean® wireless module TCM 320			**78082**	

Oil/water alarm unit ÖWWG 3 with burner connection kit

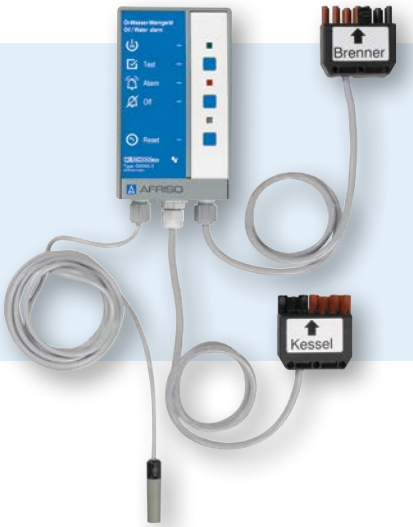

- **Connections pre-wired**
- **With visual/audible alarms, Test and Acknowledge buttons**
- **Automatic switching off of the burner in alarm conditions**
- **EnOcean®-ready**

Page 83

Application

For visual and audible alarms in the event of accumulations of liquids below the burner of an oil fuelled system and for switching off the burner in alarm conditions. Suitable for the following media: water, fuel oil and diesel fuel.

Description

The ÖWWG 3 oil/water alarm unit consists of a control unit with visual/audible alarm, Test and Acknowledge buttons as well as a flexible PTC thermistor probe. Cable and connector for connection of burner and boiler are fully wired and ready to be connected. In the event of an alarm, the unit triggers visual and audible alarms and switches off the burner. The audible alarm can be muted with the Acknowledge button. The visual alarm remains active until the leak has been removed. The burner then resumes operation. The Test button allows you to simulate an alarm condition in order to perform a function check. Alarm units with the EnOcean-ready label can be integrated into your existing building automation systems (e. g. AFRISO Smart Home) at a later point in time. To do so, plug the EnOcean® wireless module into the EnOcean® interface (PCB of the device).The AFRISOhome gateway in conjunction with additional AFRISO Smart Home products with EnOcean® wireless technology allow you to configure a whole range of fully customisable, extensible features for the protection of plants and buildings.

Technical specifications

Operating temperature range
Ambient: -5/+40 °C

Probe
L x Ø: 57 x 14 mm
Cable length: 3.2 m

Connector
Burner: 7-pin, female with 3 m cable
Boiler: 7-pin, male, with 3 m cable

Supply voltage
AC 230 V

Nominal power
10 VA

Alarm sound
Min. 70 dB(A)

Housing
Wall mounting housing made of impact-resistant plastic (ABS)
W x H x D: 100 x 188 x 65 mm
Degree of protection: IP 40 (EN 60529)

Approval for construction products
DIBt: Z-65.40-339

Scope of delivery
- Control unit
- 1 connected PTC thermistor probe
- One connected plug each for burner and boiler connection

Option
- EnOcean® wireless module (can be retrofitted)

DG: G, PG: 4	Part no.	**Price €**
Oil/water alarm unit ÖWWG 3 with burner connection kit	44490	
EnOcean® wireless module TCM 320	78082	

Oil/water alarm unit OM 5

class III, EN 13160-1/-4

- **For storage rooms, manholes, drip pans, double-walled tanks**
- **With visual/audible alarms, Test/ Acknowledge buttons and relay output**
- **Self-monitoring probe**

Page 83

Page 84

Page 86

Monitors up to 5 tanks

4

Application

For visual and audible alarms if liquids with a flash point of >55 °C are detected. OM 5 is suitable for the following media: fuel oil, diesel fuel or low-viscosity lubricating oils, motor oils, gearbox oils or hydraulic oils, vegetable oils and transformer oils, water and other liquids.
Use as leak detection system class III as per EN 13160-1/-4 and as leak detection system as per TRWS 791-1/-2.

Description

The unit in a wall mounting housing triggers visual and audible alarms in the event of accumulations of liquids which can be caused by tank leaks, backflow, flooding, etc. OM 5 5 consists of a control unit with visual/audible alarm, Test and Acknowledge buttons as well as a relay output. Up to five photoelectric probes can be connected. The probes are mounted at the lowest point of the object to be monitored. The alarm is triggered when the probe comes into contact with liquid. The audible alarm can be muted with the Acknowledge button. The visual alarm is cleared once the leak has been removed. The Test button allows you to simulate an alarm condition in order to perform a function check. The voltage-free relay contact is provided for connection of additional alarm equipment (such as additional alarm unit ZAG 01, horn). The alarm units are suitable for panel mounting with a mounting frame. A sealing kit (IP 54) is available for rough application conditions.

Empty probe for retrofitting of photoelectric probes in battery tanks
OM 5/1 with additional probe for detection of minimum or maximum levels, e.g. in fuel oil tanks.

Technical specifications

Operating temperature range
Ambient: -10/+60 °C

Probe
L x Ø: 33 x 10 mm
Cable length: 10 m

Supply voltage
OM 5: AC 230 V or AC/DC 24 V
OM 5/1: AC 230 V

Nominal power
5 VA

Switching output
Relay contact: 1 voltage-free changeover contact

Alarm sound
Min. 70 dB(A)

Housing
Wall mounting housing made of impact-resistant plastic (ABS)
W x H x D: 100 x 188 x 65 mm
Degree of protection: IP 40 (EN 60529)

Approval for construction products
DIBt: Z-65.40-214

Scope of delivery
OM 5: ▪ control unit without probe
OM 5/1: ▪ control unit
▪ 1 photoelectric probe
▪ 1 min./max level probe

i Please order the photoelectric probes separately

DG: G, PG: 4	Part no.	**Price €**
Oil/water alarm unit OM 5	**44502**	
Oil/water alarm unit OM 5, 24 V	44486	
Oil/water alarm unit OM 5/1	**44517**	
Photoelectric probe 10 m	**44503**	
Empty probe 1.66 m	43548	

Oil/water alarm unit ÖWU

- **Combination probe for determination of leaking medium oil and water**
- **For storage rooms, manholes, drip pans and pumps**
- **With fail-safe mode**
- **With visual/audible alarms, Test/ Acknowledge buttons and relay output**

Page 83

Page 85

Page 86

4

Application

For visual and audible alarms if liquids with a flash point of >55 °C are detected. Suitable for the following media: water, fuel oil, diesel fuel or low-viscosity lubricating oils, motor oils, gearbox oils or hydraulic oils, vegetable oils and transformer oils.

Description

Alarm unit in wall mounting housing for early detection of accumulations of liquids. ÖWU consists of a control unit with visual/audible alarm, Test and Acknowledge buttons, two relay outputs as well as a combination probe with photoelectric and conductivity sensors. An integrated microprocessor determines whether the detected medium is oil or water. The probe is mounted at the lowest point of the object to be monitored. The alarm is triggered when the probe comes into contact with liquid. The audible alarm can be muted with the Acknowledge button. The visual alarm is cleared once the leak has been removed. The Test button allows you to simulate an alarm condition in order to perform a function check. With fail-safe mode: Alarm is triggered if the probe fails.
The two voltage-free relay contacts are provided for connection of additional external alarm equipment or additional alarm units; e.g. 1 relay for water alarm and 1 relay for oil alarm. ÖWU features a fail-safe mode. When the unit is shipped, this is activated; however, it can be switched to eco mode for energy-saving operation. The alarm units are suitable for panel mounting with a mounting frame. A sealing kit (IP 54) is available for rough application conditions.
Alarm units with the EnOcean-ready label can be integrated into your existing building automation systems (e. g. AFRISO Smart Home) at a later point in time. To do so, plug the EnOcean® wireless module into the EnOcean® interface (PCB of the device). The AFRISOhome gateway in conjunction with additional AFRISO Smart Home products with EnOcean® wireless technology allow you to configure a whole range of fully customisable, extensible features for the protection of plants and buildings.

Technical specifications

Operating temperature range
Medium: 5/50 °C
Ambient: -10/+60 °C

Wall mounting rail probe
W x H x D: 40 x 300 x 55 mm
Standard probe cable: 1.5 m

Supply voltage
AC 100–240 V

Nominal power
6 VA

Switching output
1 voltage-free changeover contact (water alarm)
1 changeover contact (oil alarm)

Switching over
Eco mode/fail-safe mode

Contact rating
Max. AC 250 V, 2 A

Alarm sound
Min. 70 dB(A)

Housing
Wall mounting housing made of impact-resistant plastic (ABS)
W x H x D: 100 x 188 x 65 mm
Degree of protection: IP 40 (EN 60529)

Scope of delivery
- Control unit
- Wall mounting rail probe WSS

Option
- EnOcean® wireless module (can be retrofitted)

DG: G, PG: 4	Part no.	Price €
Oil/water alarm unit ÖWU	40028	
EnOcean® wireless module TCM 320	78082	

Oil-on-water detector ÖAWD-8

- **For the detection of oil layers on water**
- **Alarm unit on conductivity principle**
- **With visual alarm, Test and Unlock pushbuttons**
- **Relay output for additional alarm**

A Page 83

A Page 86

4

Application

For visual and audible alarms in the event of oil layers on water. Especially suitable for catchment basins, floods and inspection ducts.

Description

Alarm unit in wall mounting housing for the detection of oil layers on water. ÖAWD consists of a control unit with visual/audible alarm, Test/Unlock buttons as well as a relay output. ÖAWD is based on the conductivity principle. The floating probe SWS is used for detection. If an oil layer (of at least 2 mm) is detected, the alarm unit triggers a visual alarm and stores the alarm condition. Once the cause of the alarm condition has been removed, press the Unlock button to reset ÖAWD. The visual alarm is deactivated. The Test button allows you to simulate an alarm condition in order to perform a function check. The voltage-free relay contact is provided for connection of additional signalling equipment (such as ZAG 01), actuators (pumps, valves), additional alarm units or event reporting systems. The alarm units are suitable for panel mounting with a mounting frame. A sealing kit (IP 54) is available for rough application conditions.The version ÖAWD-8 is available for applications with turbulent surfaces; this version features a delay of approx. 8 s which helps to avoid false alarms.

Technical specifications

Operating temperature range
Medium: 0/50 °C
Ambient: 0/55 °C

Probe SWS
2-rod electrode, encapsulated cable connection
W x H x D: 200 x 140 x 200 mm
Cable length: 10 m
Adjustment range: 2/10 mm oil layer thickness
Also suitable for changing levels

Supply voltage
AC 100–240 V

Nominal power
5 VA

Switching output
Relay output: 1 voltage-free changeover contact

Contact rating
AC 250 V, 2 A

Response delay
ÖAWD-8: 8 s

Housing
Wall mounting housing made of impact-resistant plastic (ABS)
W x H x D: 100 x 188 x 65 mm
Degree of protection: IP 40 (EN 60529)

Scope of delivery
- Control unit without probe

DG: H, PG: 4			Part no.	**Price €**
Oil-on-water detector ÖAWD-8	1	-	**55105**	
Floating probe SWS	1	-	**55100**	

Fuel oil alarm HMS in connector housing

- **Immediate switching off of monitored devices in the event of a leak alarm**
- **With visual alarm**
- **Ready-to-connect device for fast and easy installation**

Application

For the detection of oil in drip pans below oil-consuming systems, oil pumps, pumping or control stations. Suitable for the following media: water, fuel oil, diesel fuel, motor oils, machine oils, hydraulic oils and similar liquids with a flash point of > 55 °C.

Description

The HMS fuel oil alarm unit consists of a transducer and a photoelectric probe. Devices to be monitored are connected directly to the socket of the transducer. If there is no leak, the green lamp is on. If the probe detects unwanted liquid, the alarm unit triggers a visual alarm (red lamp) and the socket in the transducer is automatically switched off.

Technical specifications

Operating temperature range
Ambient: -10/+60 °C

Photoelectric probe
Probe head: polyamide
Cable: 2 m

Supply voltage
AC 230 V

Visual indication
Green lamp Operation
Red lamp Alarm

Housing
Connector housing
W x H x D: 67 x 50 x 125 mm
Degree of protection: IP 20 (EN 60529)

Approval for construction products
DIBt: Z-65.40-214

Scope of delivery
- Transducer
- Photoelectric probe with 2 m probe cable
- Bracket for probe with mounting accessories

DG: G, PG: 4	Part no.	**Price €**
Fuel oil alarm unit HMS	**44513**	

WWG water alarm unit

- **Ideal for laundry rooms, cellars/storage rooms, pump and inspection ducts**
- **With visual/audible alarms, Test and Acknowledge buttons and 2 relay outputs**
- **With floor probe or wall mounting rail probe**
- **EnOcean®-ready**

Seite 83

Seite 84

Seite 86

4

Application

For visual and audible alarms in the event of accumulations of electrically conductive liquids such as rainwater, tap water, fresh water, waste water, cooling water and heating water.

Description

Alarm unit in wall mounting housing for the detection of even the smallest amounts of water caused by, for example, backflow due to clogged water pipes, water ingress from outdoors, broken pipes or failure of a waste water pump. WWG1 consists of a control unit with visual/audible alarm, Test and Acknowledge buttons, two relay outputs as well as a special floor probe. The probe is mounted at the lowest point of the object to be monitored. The alarm is triggered when the probe comes into contact with liquid. The audible alarm can be muted with the Acknowledge button. The visual alarm is cleared once the leak has been removed. The Test button allows you to simulate an alarm condition in order to perform a function check.
The two voltage-free relay contacts are provided for connection of additional external alarm equipment or alarm units. One relay can be acknowledged (e.g. for an external horn), the other relay cannot (e.g. for an external lamp, a solenoid valve, a pump). The alarm units are suitable for panel mounting with a mounting frame. A sealing kit (IP 54) is available for rough application conditions.
Alarm units with the EnOcean-ready label can be integrated into your existing building automation systems (e. g. AFRISO Smart Home) at a later point in time. To do so, plug the EnOcean® wireless module into the EnOcean® interface (PCB of the device). The AFRISOhome gateway in conjunction with additional AFRISO Smart Home products with EnOcean® wireless technology allow you to configure a whole range of fully customisable, extensible features for the protection of plants and buildings.

Water alarm unit WWG 2 like WWG 1, but with height-adjustable wall mounting rail probe.

Technical specifications

Operating temperature range
Ambient: -5/+55 °C

Floor probe BWS 10-1
Response level approx. 2–3 mm
Dimensions Ø 70 mm

Wall mounting rail probe WSS
Height-adjustable by approx. 200 mm
W x H x D: 37 x 320 x 55 mm

Standard probe cables
1.5 m, max. length 50 m (shielded)

Function principle
Conductivity measurement

Supply voltage
AC 100–240 V

Nominal power
2.5 VA

Switching output
1 voltage-free changeover contact
1 voltage-free normally open contact
(can be acknowledged)

Contact rating
Max. AC 250 V, 2 A

Alarm sound
Min. 70 dB(A)

Housing
Wall mounting housing made of impact-resistant plastic (ABS)
W x H x D: 100 x 188 x 65 mm
Degree of protection: IP 40 (EN 60529)

Scope of delivery
- Control unit
- Floor probe BWS 10-1 (for WWG 1)
- Wall mounting rail probe WSS (for WWG 2)

Option
- EnOcean® wireless module (can be retrofitted)

DG: G, PG: 4	Part no.	Price €
Water alarm unit WWG1	**40029**	
Water alarm unit WWG 2	**40031**	
EnOcean® wireless module TCM 320	**78082**	

Leak detectors CoFox®
ELT 500/4, ELT 8

4

Application For the detection of electrically conductive liquids such as water, emulsions or waste water.

Alarm unit CoFox® ELT 500/4

Description

Alarm unit in wall mounting housing with visual alarm, operation indicator, reset button and relay output for additional external signalling equipment or the additional alarm unit ZAG 01. A total of 4 probe circuits can be connected. Leak location by means of LEDs. The alarm is triggered when the probe comes into contact with liquid and the connected alarm equipment is activated. The alarm can be acknowledged with the Reset button. ELT 500/4 features four channels for separate probe circuits so that several probes can be operated in parallel or cascading for large-area monitoring is possible.

Technical specifications

Operating temperature range
Ambient: -10/+50 °C

Response threshold
50 kOhm

Switching output
Relay output: 1 voltage-free changeover contact

Visual indication
Green LED: Mains operation
4 red LEDs: Alarm condition

Supply voltage
AC 230 V

Probe connections
4 probe circuits

Contact rating
Max. AC 250 V, 2 A

Nominal power
3 VA

Housing
Wall mounting plastic housing
W x H x D: 53 x 113 x 108 mm
Degree of protection: IP 30 (EN 60529)

i
See page 81 for probes.
See the catalogue INDUSTRIAL TECHNOLOGY for additional information on CoFox® ELT 500/4 and ELT 8.

Water alarm unit CoFox® ELT 8

Water alarm unit in wall mounting housing with visual alarm, operation indicator as well as two relay outputs for additional external signalling equipment or the additional alarm unit ZAG 01. The probe is mounted at the lowest point of the object to be monitored. The alarm is triggered when the probe comes into contact with liquid and ELT 8 activates the connected alarm equipment. The visual alarm is cleared once the leak has been removed. ELT 8 enables parallel operation of several probes.

Operating temperature range
Ambient: -10/+60 °C

Response threshold
Fully adjustable, 2.5 kOhm – 60 kOhm

Switching output
Relay output: 2 voltage-free changeover contacts

Visual indication
Green LED: Mains operation
Red LED: Alarm condition

Supply voltage
AC 230 V or DC 24 V

Probe connections
1 probe circuit
(several probes can be connected in parallel)

Contact rating
Max. AC 250 V, 2 A

Nominal power
4 VA (230 V) / 2 VA (24 V)

Housing
W x H x D: 53 x 113 x 108 mm
Degree of protection: IP 30 (EN 60529)

DG: H, PG: 4		Part no.	Price €
Alarm unit CoFox® ELT 500/4*		53505	
Water alarm unit CoFox® ELT 8*	230 V	53503	
	24 V	53503A	

*Please order probes separately.

Gas alarm unit GS 1.1

- **For private homes**
- **Detection of gases such as methane, propane, butane in ambient air and generation of gas alarm**

Application example

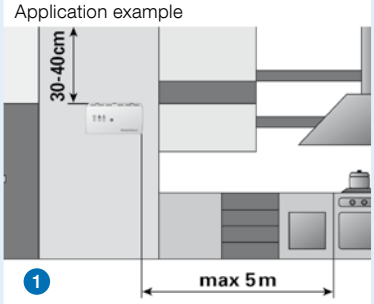

4

Application

For the detection of flammable gases such as methane, propane, butane in ambient air in residential buildings.

Description

Gas alarm unit with integrated semiconductor sensor and alarm buzzer. LEDs for operation (green), alarm (red), error (yellow), the Test button and the Reset button are located at the front side of the housing. The alarm is triggered when approx. 20 % of the LEL (lower explosive limit) is reached. The audible alarm can be muted with the Reset button. The visual alarm remains active until the alarm condition no longer exists (reset).

Technical specifications

Supply voltage
AC 230 V

Housing
W x H x D: 158 x 90 x 44 mm
Degree of protection: IP 20 (EN 60529)

Operating temperature range
Ambient: 0/50 °C; max. 75 % r.h.

Alarm value
Approx. 20 % LEL

Alarm tone
Internal buzzer, min. 50 dB(A)

Service life
Approx. 5 years

i

GS gas alarm units are cross-sensitive to hydrocarbons, lacquers, solvents, alcohols and similar media.

DG: H, PG: 4			Part no.	**Price €**
Gas alarm unit GS 1.1 Methane	1	-	**61184**	
Gas alarm unit GS 1.1 Propane/Butane	1	-	**61186**	

Gas alarm units for the private home

4

Gas alarm unit GS 2.1

Application

For the detection of flammable gases such as methane, propane, butane in ambient air in residential buildings.

Description

Gas alarm unit with integrated semiconductor sensor, alarm buzzer and relay output for connection of additional external alarm equipment (e.g. horn, warning light). LEDs for operation (green), alarm (red), error (yellow), the test button and the reset button are located at the front side of the housing. The alarm is triggered when approx. 20 % of the LEL (lower explosive limit) is reached. The audible alarm can be muted with the reset button. The visual alarm remains active until the alarm condition no longer exists (reset). The unit features an additional input for connection of an external gas sensor GS 4.1 as a second measuring point, e.g. for monitoring different rooms.

Technical specifications

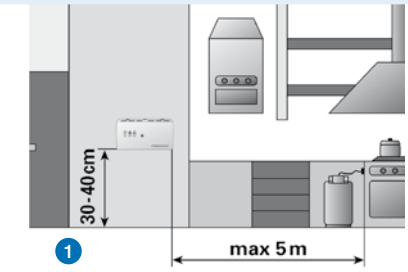

Application example 1 Propane

Supply voltage: AC 230 V

Housing
W x H x D: 158 x 90 x 44 mm
Degree of protection: IP 20 (EN 60529)

Operating temperature range
Ambient: 0/50 °C; max. 75 % r.h.

Alarm value: Approx. 20 % LEL

Audible alarm: Internal buzzer, min. 50 dB(A)

Service life: Approx. 5 years

External gas sensor GS 4.1

Additional gas sensor to be used with the gas alarm unit GS 2.1. Enables monitoring at two points in different rooms.

Remote probe for gas alarm unit GS 2.1. Audible alarm is triggered by the gas alarm GS 2.1.

Detectable gases: methane, propane, butane. LEDs at the sensor indicate the operating and alarm state of the gas alarm system:

- LED green: Operation
- LED yellow: Fault
- LED red: Gas alarm

Measured gas
Flammable gases and vapours in ambient air.

Measuring range
0–50 % LEL

Measuring principle
Semiconductor (service life approx. 5 years, depending on the operating conditions)

Supply voltage: Via GS 2.1

Housing
W x H x D: 80 x 80 x 36 mm
Degree of protection: IP 20 (EN 60529)

Operating temperature range
Ambient: 0/50 °C
max. 75 % r.h.

Alarm value: Approx. 20 % LEL

Service life: Approx. 5 years

i

GS gas alarm units and sensors are cross-sensitive to hydrocarbons, lacquers, solvents, alcohols and similar media.

DG: H, PG: 4			Part no.	Price €
Gas alarm unit GS 2.1 Methane	1	-	61185	
Gas alarm unit GS 2.1 Propane/Butane	1	-	61187	
Gas sensor GS 4.1 Methane	1	-	61188	
Gas sensor GS 4.1 Propane/Butane	1	-	61189	

Gas detector GM 2.1

- **For early detection of natural gas and liquefied gas**
- **Audible and visual alarms; Acknowledge button and relay output**
- **Self-monitoring for line interruption, short circuit and sensor defect**

A Page 80

A Page 83

Application

For continuous monitoring for explosive gases and vapours and for generating alarms in conjunction with the appropriate sensors. GM 2.1 is installed in heating rooms and basements, storage, office and residential buildings to increase safety. Not suitable for installation in hazardous areas (EX areas).

Description

Alarm unit in a wall mounting housing with audible and visual alarms. GM features an alarm threshold and is equipped with a relay contact. If the threshold value is exceeded, the unit generates an alarm. The red LED lights up, the audible alarm goes off and the alarm relay switches. The audible alarm can be muted with the Acknowledge button. When the alarm condition no longer exists, you press the Acknowledge button again to clear the visual alarm (alarm memory). The alarm can only be cleared with the Acknowledge button if the cause of the alarm has been removed. If the concentration still exceeds the alarm threshold, pressing the Acknowledge button does not clear the alarm. The voltage-free relay contact allows you to switch additional external signalling equipment such as the event reporting system EMS, horns, lamps in the case of alarm or fault conditions. GM is suitable for panel mounting with a mounting frame. A DIN rail clip is available for fast and easy mounting of GM to standard rails (DIN rail/EH50022). A sealing kit (IP 54) is available for rough application conditions.

GM 2.1 can be combined with suitable gas sensors:
- 1 gas sensor (methane or propane/butane)
- 2 gas sensors, also for different gases (methane and/or propane/butane)

Technical specifications

Inputs
2 sensors
Connection cable 3 wires
Wire cross section > 0.5 mm²

Distance control unit – sensor
Max. 150 m

Alarm threshold
1 permanently installed alarm threshold for alarm at approx. 20 % LEL with alarm memory

Indication

1 green LED:	Operation
1 red LED:	Flashing: fault Steady on: alarm

Audible alarm
Piezo buzzer approx. 70 dB(A), can be acknowledged

Switching outputs
Relay contacts: 1 voltage-free changeover contact
Contact rating: AC 250 V, 2 A

Supply voltage
AC 230 V

Power input
15 VA

Operating temperature range
Ambient: 0/40 °C

Housing
Wall mounting housing made of impact-resistant plastic (ABS)

W x H x D:	100 x 188 x 65 mm
Weight:	0.55 kg
Degree of protection:	IP 40 (EN 60529)

i Please order sensors separately.

DG: H	PG	Part no.	Price €
Gas detector GM 2.1	4	**61150**	
DIN rail clip	1	**43100**	

Gas sensors for GM 2.1, test gas unit for gas alarm unit/sensors

Gas sensor GS 4.1

Description

Semiconductor gas sensor in plastic housing for connection to gas detector GM 2.1. To be used in dry rooms (e.g. heating facilities). Detectable gases: methane, propane, butane. LEDs at the sensor indicate the operating and alarm state of the gas alarm system:

- LED green: Operation
- LED yellow: Fault
- LED red: Gas alarm

Technical specifications

Measured gas
Flammable gases and vapours in ambient air. Gas sensors are cross-sensitive to hydrocarbons, lacquers, solvents, alcohols and similar media.

Measuring range
0–50 % LEL

Measuring principle
Semiconductor (service life approx. 5 years, depending on the operating conditions)

Operating temperature range
Ambient: 0/50 °C

Humidity
Max. 75 % r.h.

Housing
Wall mounting plastic housing
W x H x D 80 x 80 x 36 mm
Weight: Approx. 100 g

i

Gas sensor calibration
Prior to shipment, the gas sensors are calibrated and documented to the gas specified by the customer. Therefore, please always indicate the gas type when ordering.

Test gas bag PGT 10 for gas alarm units/sensors

For checking, servicing and repairing gas alarm systems. Nylon bag with test gas cap and withdrawal unit (valve, flow meter with stainless steel float for gas flow regulation from 0.5–1.5 l/min and test gas tube). Can accommodate 1 to 3 test gas cylinders.

Calibration gas not included in scope of delivery; please order separately.

Sampling unit MiniFlo

	PG	DG			Part no.	Price €
Gas sensor GS 4.1 methane	4	H	1	-	**61188**	
Gas sensor GS 4.1 Propane/Butane	4	H	1	-	**61189**	
Test gas bag PGT 10 incl. sampling unit (without gas cylinder)	4	H	1	-	500542	
Sampling unit MiniFlo, brass valve and Perspex flow meter with stainless steel float for gas flow control from 0.5 to 1.5 l/min, test gas hose	3	E	1	-	**69050**	
Calibration gas methane 20 % LEL, non-recyclable cylinder containing 12 l	2	E	1	-	69060	
Calibration gas methane 40 % LEL, non-recyclable cylinder containing 12 l	2	E	1	-	69061	
Calibration gas propane 20 % LEL, non-recyclable cylinder containing 12 l	2	E	1	-	69062	
Calibration gas propane 40 % LEL, non-recyclable cylinder containing 12 l	2	E	1	-	69063	
Calibration gas carbon monoxide (300 ppm), non-recyclable cylinder containing 12 l	2	E	1	-	69064	
Synthetic air for zero point calibration, non-recyclable cylinder containing 12 l	2	E	1	-	69065	

Enquire for other calibration gases and concentrations.

Probes for alarm units

Floor water probe BWS 10-1

Application
For the detection of conductive liquids such as flood water, rainwater, tap water, fresh water, waste water, cooling water and heating water.

Description
Floor probe suitable for WWG 1, ELT 8, ELT 680 and ELT 500/4. The probe is mounted at the lowest point of the object to be monitored. The alarm is triggered by the alarm unit when the probe comes into contact with liquid.

Probe diameter: 70 mm
Cable length: 2 m
Response level: approx. 2–3 mm

Floor water probe BWS 10-1

Wall mounting rail probe WSS

Application
For the detection of conductive liquids such as flood water, rainwater, tap water, fresh water, waste water, cooling water and heating water.

Description
Height-adjustable wall mounting rail probe suitable for WWG 2, ELT 8, ELT 680 and ELT 500/4. The probe is mounted to the wall at the object to be monitored. The desired response level (distance from probe to floor) is adjusted via the wall mounting rail. The alarm is triggered by the connected alarm unit when the probe comes into contact with liquid.

Dimensions: 37 x 320 x 55 mm
Cable length: 1.5 m
Height-adjustable by approx. 200 mm

Wall mounting rail probe WSS

Floating probe SWS

Application
For the detection of oil layers, emulsions or foam on water. Also suitable for changing levels (e.g. flowing bodies of water)

Description
Floating probe suitable for ÖAWD-1, ÖAWD-8, ELT 8 and ELT 680. The probe floats on the water surface. The oil layer thickness (at least 2 mm) is set via the height-adjustable 2-rod probe. The alarm is triggered by the connected alarm unit when the probe comes into contact with the oil layer.

Dimensions
W x H x D:
200 x 140 x 200 mm

Cable
Encapsulated cable connection
Length: 10 m

Adjustment range
2/10 mm oil layer thickness

Floating probe SWS

DG: H, PG: 4			Part no.	**Price €**
Floor water probe BWS 10-1	1	-	**55112**	
Wall mounting rail probe WSS	1	-	**55050**	
Floating probe SWS	1	-	**55100**	

i Many probe versions are available. Please enquire.

Probes and accessories for alarm units

PTC thermistor probe

Application

For the detection of liquids with a flash point of >55 °C. Suitable for the following media: water, fuel oil, diesel fuel or low-viscosity lubricating oils, motor oils, hydraulic oils, vegetable oils and transformer oils, antifreeze agents, oil-water mixtures and emulsions.

Description

Suitable for ÖWWG 3. The probe is mounted at the lowest point of the object to be monitored or in the drip pan. The alarm is triggered by the alarm unit when the probe comes into contact with liquid.

Probe diameter: 14 mm
Cable length: 3.2 m or 10 m
Response level: 17 mm

PTC thermistor probe

Photoelectric probe

Application

For the detection of liquids with a flash point of >55 °C. Suitable for the following media: water, fuel oil, diesel fuel or low-viscosity lubricating oils, motor oils, gearbox oils or hydraulic oils, vegetable oils and transformer oils.

Description

Floor probe suitable for oil/water alarm unit OM 5. The probe is mounted at the lowest point of the object to be monitored. The alarm is triggered by the alarm unit when the probe comes into contact with liquid.

Probe diameter: 10 mm
Cable length: 10 m
Response level: 5 mm

Photoelectric probe

EnOcean® wireless module TCM 320

Application

For remote indication and easy integration of WATCHDOG-LINE alarm units into smart home systems (e.g. AFRISO Smart Home) based on EnOcean® wireless. Users with mobile devices can immediately take appropriate action in response to an alarm.

Description

EnOcean® wireless module for WATCHDOG-LINE alarm units. Can be plugged into PCBs of boards which are factory-equipped with a slot for the EnOcean® wireless module. Can be integrated into all AFRISO products with the label "EnOcean-ready" on the front.

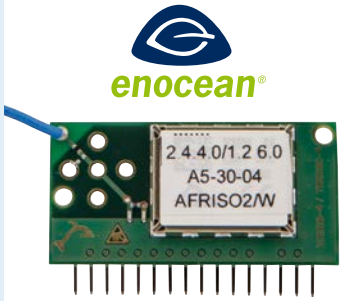

EnOcean® wireless module TCM 320

DG: G, PG: 4			Part no.	**Price €**
Spare probe ÖWWG 3, length 3.2 m, 09/2013 and later	1	-	**44516**	
Spare probe ÖWWG 3, length 10 m, 09/2013 and later	1	-	**44484**	
Spare probe ÖWWG 3, length 25 m, 09/2013 and later	1	-	**44482**	
Spare probe ÖWWG 3, length 3.2 m, up to 08/2013	1	-	**44481**	
Photoelectric probe	1	-	**44503**	
EnOcean® wireless module TCM 320	1	-	**78082**	

Accessories for alarm units

Drip pan

Application For the collection of escaping oil. Drip pans should be mounted below all oil fittings such as filters, oil vents, burners, etc. in order to avoid damages resulting from escaping oil and in order to detect leaks as early as possible.

Description Drip pan made of white plastic (PE). At the lowest part of the drip pan, the sensor of an oil alarm can be installed, for example, of oil alarm ÖWWG3. If the drip pan cannot be checked on a daily basis, oil alarms with audible and visual alarms are required. Several independent drip pans can be monitored, e.g. with a single oil alarm OM 5 with up to 5 probes. A mounting clamp for the sensor is supplied with the drip pan.

Dimensions (W x D): 600 x 300 mm

Drip pan

Mounting frame

Description Mounting frame for wall mounting housings 100 x 188 x 65 mm (W x H x D) of the WATCHDOG-LINE alarm units, 10/2007 and later.
For fast integration in control cabinets

Mounting frame

Sealing kit (IP 54)

Description Sealing kit for rough application conditions. Suitable for all wall mounting (10/2007 and later housings of the WATCHDOG-LINE alarm units). The sealing kit is easy to mount between the housing cover and base. This increases the degree of protection of the alarm unit to IP 54.

Sealing kit (IP 54)

DIN rail clip

Description DIN rail clip for fast and easy mounting of WATCHDOG-LINE alarm units in the control cabinet or for side-by-side mounting of several units on the wall. The clip is mounted by means of screws so that the alarm unit can be clipped onto standard DIN rails.

DIN rail clip

DG: G, PG: 1			Part no.	**Price €**
Drip pan	1	-	**44512**	
Mounting frame	1	-	**43521**	
Sealing kit (IP 54)	1	-	**43416**	
DIN rail clip	1	-	**43100**	

Signalling devices

Combined warning light and horn WLH 1

Advantages

- Highly effective signal due to yellow light
- Loud 90 dB alarm tone
- Warning light and horn can be controlled separately

Description

For dry indoor spaces.

Technical specifications

Sound pressure
90 dB (A), distance 1 m

Supply voltage
AC 230 V

Power input
10 VA

Degree of protection
IP 33 (EN 60529)

Weight
0.19 kg

Horn KH 1

- Loud 90 dB alarm tone

For dry indoor spaces.

Sound pressure
90 dB (A), distance 1 m

Supply voltage
AC 230 V

Power input
6 VA

Degree of protection
IP 20 (EN 60529)

Weight
0.18 kg

DG: G, PG: 4			Part no.	**Price €**
Combined warning light and horn WLH 1	1	-	**61020**	
Horn KH 1	1	-	**61011**	

Signalling devices

Horn HPW 2

Advantages

- Loud 110 dB alarm tone

Description

For humid rooms and for outdoor installation.

Technical specifications

Sound pressure
110 dB (A), distance 1 m

Supply voltage
AC 230 V

Power input
22 VA

Degree of protection
IP 55 (EN 60529)

Weight
1 kg

Warning light with rotating reflector SLD 1

- Highly effective signal due to yellow light and rotating reflector
- Robust design with Al base
- Maintenance-free

For humid rooms and for outdoor installation.

Supply voltage
AC 230 V

Degree of protection
IP 55 (EN 60529)

Weight
1.8 kg

Mounting position
Any

DG: G, PG: 4	PG	RK			Part no.	**Price €**
Horn HPW 2	4	G	1	-	**61012**	
Warning light with rotating reflector SLD 1	4	H	1	-	**61015**	

Additional alarm unit ZAG 01

- **Audible and visual alarms for maximum safety**
- **Vendor-independent use with devices with switching output (relay contact)**
- **With 2 voltage-free changeover contacts (at output side)**
- **Ready-to-connect device for easy installation and commissioning**

A Page 51 | A Page 66 | A Page 83

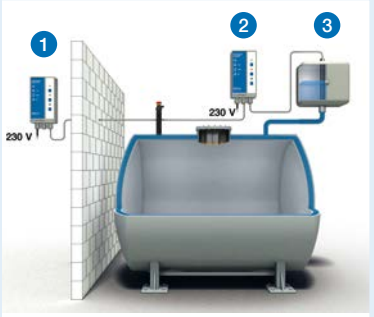

1 Additional alarm unit ZAG 01
2 Leak detector LAG 13
3 LAG container with probe

Application

For indication and transfer of alarm signals from WATCHDOG-LINE alarm units, AFRISO leak detectors or any other switching equipment. Suitable for triggering additional visual and audible alarms in buildings, e.g. in the case of underground tank facilities or in rooms which are far away from the dangerous location. Can be connected directly to the output of the alarm unit.

Description

The additional alarm unit in a wall mounting housing signals alarm conditions in conjunction with an alarm unit or a leak detector. ZAG 01 is connected to the voltage-free contact of the alarm unit. A 230 V alarm input is also available. The audible alarm can be muted with the Acknowledge button. The visual alarm is cleared once the leak or event has been removed. The Test button allows you to perform a function check.

The voltage-free relay contacts allow for connection of additional external signalling equipment (such as horns), event reporting systems EMS, building control systems or similar equipment. ZAG 01 is suitable for panel mounting with a mounting frame. A sealing kit (IP 54) is available for rough application conditions.

Technical specifications

Operating temperature range
Ambient/storage: -10/+60 °C

Supply voltage
AC 230 V

Nominal power
3 VA

Alarm input
Input 1: Voltage-free
Input 2: AC 230 V

Switching outputs
Relay contact 1:
voltage-free changeover contact,
can be acknowledged
Relay contact 2:
voltage-free changeover contact,
cannot be acknowledged
Contact rating: AC 250 V, 2 A

Alarm sound
Min. 70 dB (A)

Housing
Wall mounting housing made of
impact-resistant plastic (ABS)
W x H x D: 100 x 188 x 65 mm

Degree of protection
IP 40 (EN 60529)

DG: H, PG: 4	Part no.	**Price €**
Additional alarm unit ZAG 01	40633	

CATALOGUE INDUSTRIAL TECHNOLOGY

Industrial alarm units

Gas alarm unit/station GW-S/GW-SK

- Versions with compact DIN rail housing or wall mounting housing
- For connection of up to six sensors/measuring points
- Options: Serial interface, emergency power module, data logger

Sensor inputs
4–20 mA, RS 232 interface for configuration

Switching outputs
4/6 voltage-free relay contacts

Page 342

Probes for GW-S/GW-SK

- Versions for the detection of flammable or combustible gases or for monitoring oxygen concentrations and toxic gases
- For monitoring of combustible gases and vapours or carbon monoxide

Page 344

i
This and many other products can be found in the catalogue INDUSTRIAL TECHNOLOGY

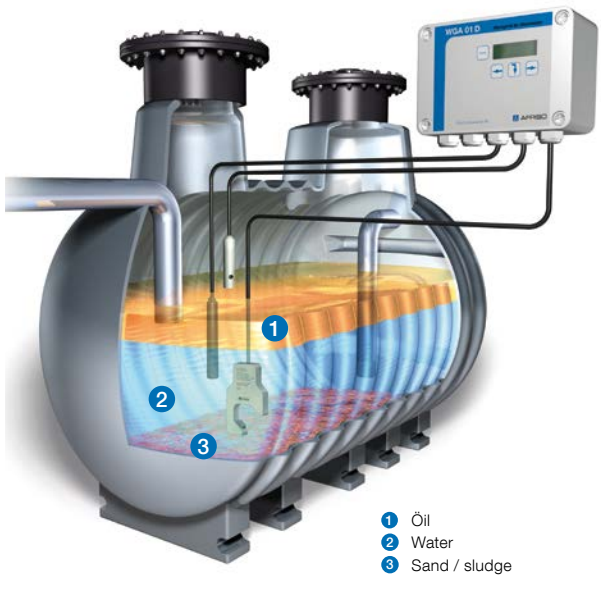

1 Öil
2 Water
3 Sand / sludge

Alarm units for separators

- For oil, petrol and grease separator systems
- Probes for all applications: Layer thickness alarm, overflow alarm, sludge alarm, sand alarm or oil-on-water alarm
- With visual/audible alarms and relay output
- Version WGA 01 D with LC display for plain text messages

Page 337

reddot award 2014
winner

Temperature control

Water sensors

AFRISOhome gateway

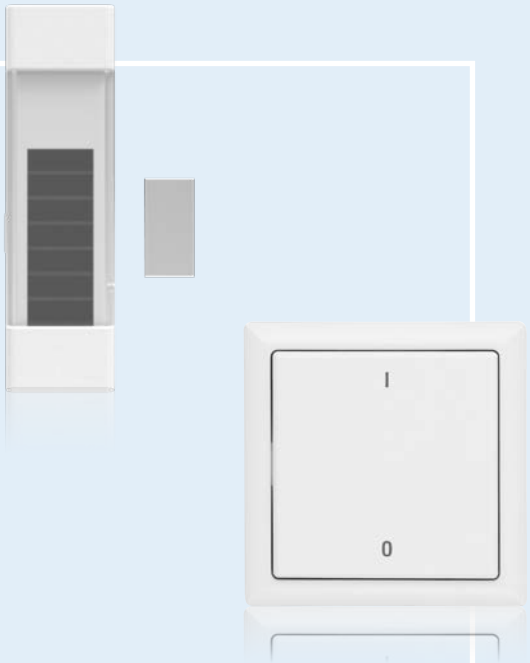

Wireless automation

CHAPTER 5

AFRISO Smart Home system: Intelligent alarm units, sensors, actuators and components for building automation

OVERVIEW

Building automation with AFRISO Smart Home 90

Sensors for the detection of water leakage 92

WATCHDOG-LINE alarm units with EnOcean® wireless 119

ALARM UNITS

Mechanical water sensor WaterSensor eco 93

Conductivity water sensor WaterSensor con 94

Conductivity water sensor WaterSensor BWS 95

Water valve WaterControl, wireless control 01 96

Temperature and pressure measuring instrument TDM 51 F 97

Tank contents indicator DTA 20 E 98

Wireless smoke alarm ASD 99

Wireless heat detector AHD 10 100

HOME COMFORT

Single room temperature controller CosiTherm® wireless 101

Room temperature sensor FT/FTF 104

Wireless transmitter for temperature and/or humidity FTM T/TF 105

Temperature and humidity sensor FTM 20 TF 106

Wireless actuator AVD 20-D for radiators 107

Wireless actuator AVD 30 for radiators 108

CO_2 sensor F 109

WIRELESS AUTOMATION

Universal wireless transmitter FTM 110

Wireless rocker switch FT4F-rw 111

Door and window contact AMC 20 112

Indoor siren AIS 10/PRO with repeater function 113

Spare parts and accessories for AFRISO Smart Home 115

CENTRAL CONTROL/MANAGEMENT

Mobile app AFRISO**home** 116

AFRISOhome gateway HG 01 117

Personal building automation with AFRISO Smart Home

Safety means more comfort – the intelligent, energy-saving building with AFRISO Smart Home

AFRISO has been manufacturing alarm units for the safe operation of tank facilities and heating systems for more than 60 years. So far, alarms were mainly signalled directly on site. Transferring alarm messages to building control systems was possible, but it involved considerable effort.
The wireless transmission standard EnOcean®, available for domestic technology since 2003, breaks new ground for a completely different approach to building automation. The transmission protocol allows a whole range of different products to be networked on the basis of EnOcean® wireless. This technological milestone breaks new ground for building automation not only in new buildings – reasonably priced intelligent networking becomes possible in existing buildings. Products with an EnOcean® wireless module do not require cable connections to a building control centre and can be used almost anywhere in buildings due to their compact design.
Manufacturers from a great variety of areas have teamed up in the EnOcean® Alliance and offer a large range of products. With the Smart Home System AFRISOLab, AFRISO has developed a portfolio of outstanding sensors and alarm units for reliable leakage protection (for example, water/oil) as well as devices for controlling heating systems in an economical way. AFRISOLab products are cost-effective, reliable and practical.
Even for end customers, there are no more barriers to entry into the networked world of customised, modularly extensible building automation and security systems. The perfect approach to a flexible smart home solution.

No cables.
No cables are required for building automation systems on the basis of the EnOcean® wireless technology. Ten metres of power cable (NYY 3 x 1.5 mm) weigh approx. 2.3 kg – not using this cable saves money and is great for the environment.

No batteries.
Energy harvesting is the foundation of battery-less, maintenance-free and flexible building automation. The energy required for sending messages is derived from ambient sources – small movements, pressure, light, temperature or vibration are sufficient to allow for power-independent operation of the sensors.

No limits.
Renovation projects and new buildings benefit from the new, creative and innovative developments based on EnOcean® wireless technology. There are countless ways of combining EnOcean® products.

A fully featured smart home system on the basis of EnOcean wireless technology networks all light, heating and air conditioning control systems via a central gateway. The gateway processes sensor and consumption data, triggers control action and initiates other measures, and transmits the information to mobile devices such as smartphones, tablets, etc., via WLAN or Internet. Products from other members of the EnOcean® Alliance for controlling household appliances can also be integrated.

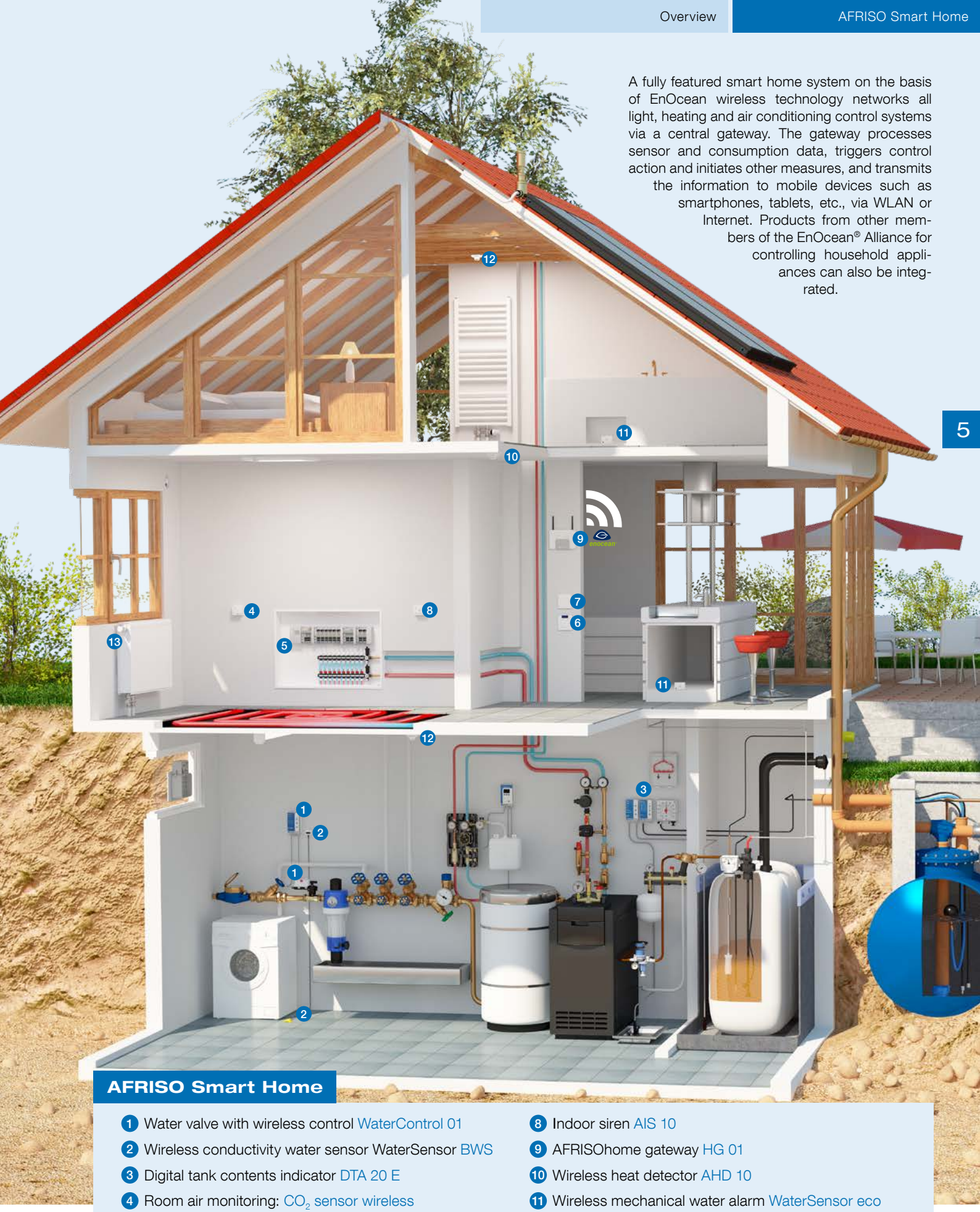

AFRISO Smart Home

1. Water valve with wireless control WaterControl 01
2. Wireless conductivity water sensor WaterSensor BWS
3. Digital tank contents indicator DTA 20 E
4. Room air monitoring: CO_2 sensor wireless
5. Single room temperature controller CosiTherm®-Funk
6. Wireless room temperature sensor FT
7. Wireless rocker switch FT4F-rw
8. Indoor siren AIS 10
9. AFRISOhome gateway HG 01
10. Wireless heat detector AHD 10
11. Wireless mechanical water alarm WaterSensor eco
12. Wireless smoke detector ASD 10
13. Wireless actuator for radiators AVD 20-D

Sensors for the detection of water leakage

Product type		**WaterSensor eco**	**WaterSensor con**	**WaterSensor BWS 10-2**	**WWG with BWS 10-1**
Catalogue page		See page 93	See page 94	See page 95	See page 75
Typical applications		Inaccessible areas without light source or areas where battery replacement is difficult or impossible, e.g. below bath-tubs, sinks, kitchen cabinets, refrigerators, shafts, etc.	Accessible areas subject to sunlight or areas where batteries can be replaced, in living spaces.	Accessible areas subject to sunlight or areas where batteries can be replaced, in basements or utility rooms.	Most robust and reliable version for industrial facilities, basements, storage rooms, etc..
Measuring principle		Fibre disks	Conductivity	Conductivity	Conductivity
EnOcean® wireless		•	•	•	Via additional module TCM 320
AFRISO HG 01	Can be connected to the following gateways	•	•	•	•
homee EnOcean® Cube		•	•	•	
wiButler		•	•	•	
alphaEos		•	•	•	
Digital Concepts		•	•	•	•
Eltako GFVS		•			
Stand-alone operation with AFRISO water valve WaterControl 01		•	•	•	•
Availability monitoring (heartbeat)			•	•	•
External power supply		Energy harvesting	Energy harvesting via solar cell or optional battery	Energy harvesting via solar cell or optional battery	AC 230 V (mains voltage monitoring and alarm in the case of power outage)
Response level		1.5 mm	0.5 mm	2 – 3 mm	2 – 3 mm
Response delay		< 6 minutes	None	None	None
Non-breakable probe				•	•
Floor mounting		•		•	•
Wall mounting				•	•
Integrated temperature measurement			•	•	

Mechanical water sensor WaterSensor eco

- **Flexible location-independent use anywhere in buildings**
- **No battery, no cables required**
- **Wireless transmission without power supply in the case of state transitions**

A Page 96

A Page 116

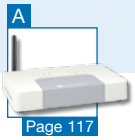
A Page 117

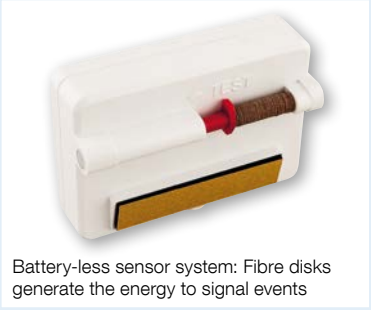
Battery-less sensor system: Fibre disks generate the energy to signal events

5

Application

For the detection of accumulations of water at defined horizontal surfaces or positions (e.g. below pipes, fittings and in the area of washing machines, below bath tubs or dishwashers, in utility rooms or basements). Suitable for water.

Description

WaterSensor eco is equipped with fibre disks that work as a sensor; it does not require an additional power supply. In the case of a leak, the fibre disks expand and generate the required power to send the event message to WaterControl 01 or to the AFRISOhome gateway. The event message is sent when the fibre disks expand or shrink.
WaterControl 01 can be used, for example, to shut off the water pipe to keep further water from escaping. The AFRISOhome gateway transmits alarm messages and state transition messages via WLAN or LAN to the person in charge (for example, to the owner, the facility manager, the janitor or other configured contacts); the message includes information on which WaterSensor eco has signalled the state transition. The AFRISOhome gateway in conjunction with additional AFRISO products with EnOcean® wireless technology allows the user to configure a whole range of fully customisable, extensible applications.

Technical specifications

Operating temperature range

Ambient:	-25/+65 °C
Storage:	-25/+65 °C
Medium:	1/65 °C

Response level
1.5 mm

Response delay
< 6 min (first 5 responses)
up to 1 hour (6th to 10th response)

Supply voltage
Energy harvesting (via fibre disks)

Housing
Plastic housing (PC)

Colour:	White, similar to RAL 9003
W x H x D:	80 x 55 x 30 mm
Weight:	66 g
Degree of protection:	IP 43 (EN 60529)

EnOcean® wireless

EEP:	F6-05-01
Frequency:	868.3 MHz
Transmission power:	Max. 10 mW
Range:	10 to 30 m (depending on room arrangement and materials in the building)

Scope of delivery
- WaterSensor eco
- Adhesive tape

Necessary additional components
- WaterControl 01
  and/or
- AFRISOhome gateway

i
See operating instructions for detailed information on the range of the EnOcean® wireless module.

DG: L, PG: 4	Part no.	**Price €**
Water sensor WaterSensor eco	**55080**	

Conductivity water sensor WaterSensor con

- **Wireless operation (photovoltaic cell or battery)**
- **Shapely probe for use in living spaces, kitchens or business rooms**
- **Additional temperature measurement**

Page 96

Page 116

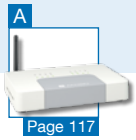
Page 117

Page 115

Immediate leakage detection via conductivity sensor surface

5

Application

For the detection of accumulations of water at defined horizontal surfaces or positions (e.g. in the area of fittings washing machines, coffee makers with water connection, etc.). Suitable for water.

Description

WaterSensor con features a conductivity sensor at the bottom. The energy required to send an EnOcean® telegram is generated by means of an integrated photovoltaic cell. An optional battery can be used for application in darker rooms. An extension cable is available for separate mounting of sensor and wireless transmitter. WaterSensor con cyclically transmits the actual ambient temperature and the logical state of the conductivity sensor (conductive liquid present or not present) and also sends a telegram when the state changes via the integrated EnOcean® wireless module to the water valve WaterControl 01 or to the AFRISO gateway.
WaterControl 01 can close the water pipe in response to an event message to keep further water from escaping. The AFRISOhome gateway transmits alarm messages and status messages via WLAN or LAN to the person in charge (for example, to the owner, the facility manager, the janitor or other configured contacts); the message includes information on which water sensor has signalled the state transition.
The AFRISOhome gateway in conjunction with additional AFRISO products with EnOcean® wireless technology allows the user to configure a whole range of fully customisable, extensible applications.

Technical specifications

Operating temperature range
Ambient: 0/40 °C
Storage: -20/+60 °C
Medium: 1/60 °C

Response level
0.5 mm

Temperature measuring range
Measuring range: 0/40 °C
Accuracy: ±1 K

Supply voltage
Energy harvesting (via photovoltaic cell) or 1/2 AA lithium battery, DC 3.6 V (with daylight less than 200 lx)

Housing
Plastic housing (PC)
Colour: White, similar to RAL 9003
W x H x D: 55 x 50 x 42 mm
Weight: 47 g
Degree of protection: IP 42 (EN 60529)

EnOcean® wireless
EEP: A5-30-03
Frequency: 868.3 MHz
Transmission power: Max. 10 mW
Range: 10 to 30 m (depending on room arrangement and materials in the building)

Scope of delivery
- WaterSensor con
- Without battery

Necessary additional components
- WaterControl 01
  and/or
- AFRISOhome gateway

i
See operating instructions for detailed information on the range of the EnOcean® wireless module.

DG: L, PG: 4	Part no.	Price €
Water sensor WaterSensor con	78146	

Conductivity water sensor WaterSensor BWS

- **Wireless operation (photovoltaic cell or battery)**
- **Robust, non-breakable probe especially for utility rooms**
- **Additional room temperature measurement via wireless transmitter**

A Page 96
A Page 116
A Page 117

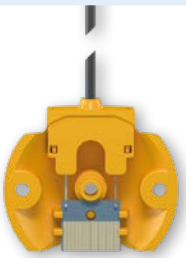

Immediate leakage detection and stationary mounting

5

Application

For the detection of accumulations of water at defined horizontal surfaces or positions (e.g. in the area of fittings, washing machines, below pipes, etc.).

Description

WaterSensor BWS consists of a probe with extension cable and a wireless transmitter with an integrated temperature sensor. The probe features a conductivity sensor at the bottom. The energy required to send an EnOcean® telegram is generated by means of a photovoltaic cell in the wireless transmitter. An optional battery can be used for application in darker rooms. WaterSensor BWS cyclically transmits the actual ambient temperature and the logical state of the conductivity sensor (conductive liquid present or not present) and also sends a telegram when the state changes via the integrated EnOcean® wireless module to the water valve WaterControl 01 or to the AFRISOhome gateway.
WaterControl 01 can close the water pipe in response to an event message to keep further water from escaping. The AFRISOhome gateway transmits alarm messages and status messages via WLAN or LAN to the person in charge (for example, to the owner, the facility manager, the janitor or other configured contacts); the message includes information on which water sensor has signalled the state transition.
The AFRISOhome gateway in conjunction with additional AFRISO products with EnOcean® wireless technology allows the user to configure a whole range of fully customisable, extensible applications.

Technical specifications

Operating temperature range
Ambient: 0/40 °C
Storage: -20/+60 °C
Medium: 1/60 °C

Response level
Approx. 2–3 mm

Temperature measuring range
Measuring range: 0/40 °C
Accuracy: ±1 K

Supply voltage
Energy harvesting (via photovoltaic cell) or 1/2 AA lithium battery, DC 3.6 V (with daylight less than 200 lx)

Housing
Plastic housing (PC)
Colour: White, similar to RAL 9003
W x H x D: 55 x 50 x 42 mm
Weight: 47 g
Degree of protection: IP 42 (EN 60529)

Housing floor probe BWS 10.2
Dimensions Ø x L: 75 x 40 mm
Cable length: 1.80 m

EnOcean® wireless
EEP: A5-30-03
Frequency: 868.3 MHz
Transmission power: Max. 10 mW
Range: 10 to 30 m (depending on room arrangement and materials in the building)

Scope of delivery
- Wireless transmitter
- Sensor BWS 10-2 with connection cable
- Without battery

Necessary additional components
- WaterControl 01
  and/or
- AFRISOhome gateway

i
See operating instructions for detailed information on the range of the EnOcean® wireless module.

DG: L, PG: 4	Part no.	Price €
Water sensor WaterSensor BWS	55120	
Spare probe BWS 10-2	55116	

Water valve WaterControl 01 with wireless control

- **Immediate shutting off of the water pipe in the case of a leak**
- **Reduced damage after pipe burst**

A Page 93 | A Page 94 | A Page 116

5

Application

For manually or remotely controlled closing and opening of a water pipe in buildings in response to an event message from the water sensors WaterSensor eco, con or BWS.

Description

WaterControl 01 consists of a shut-off valve and a control unit with power supply and an EnOcean® wireless module. The shut-off valve features a drinking water-approved ball valve with an electric motor which is integrated in the water-carrying pipe. Four versions with different connection diameters are available: connection threads G¾, G1, G1¼ and G1½. There several ways to open and close the shut-off valve in the water pipe:

- Opening/closing the shut-off valve mechanically via the operating handle
- Opening/closing the shut-off valve electrically via buttons at the control unit
- Closing the shut-off valve via water sensors
- Opening/closing the shut-off valve via EnOcean® switch
- Opening/closing the shut-off valve via AFRISOhome gateway and smartphone

The control unit has a permanent wireless connection to the water sensors WaterSensor eco or WaterSensor con or WaterSensor BWS and/or the AFRISOhome gateway. An event message is triggered if the water sensors detect a leak, e.g. caused by a defective household appliance or a water pipe burst. WaterControl 01 can be used, for example, to shut off the water pipe to keep further water from escaping. The AFRISOhome gateway transmits alarm messages and state transition messages via WLAN or LAN to the person in charge (for example, to the owner, the facility manager, the janitor or other configured contacts).

Technical specifications

Operating temperature range
Ambient: 0/50 °C
Storage: -10/+80 °C
Medium: 4/80 °C

Supply voltage
AC 100–240 V

Nominal power
Motor at standstill: < 2 VA
Motor running: < 5 VA

Housing
Wall mounting housing made of impact-resistant plastic (ABS)
W x H x D: 100 x 188 x 65 mm
Weight: 430 g
Degree of protection: IP 40 (EN 60529)

Ball valve (DVGW-tested) with motor
W x H x D: 65 x 140 x 70 mm
Weight: 800 g to 2 kg
Degree of protection: IP 40 (EN 60529)

EnOcean® wireless
EEP: D2-A0-01
Frequency: 868.3 MHz
Transmission power: Max. 10 mW
Range: 10 to 30 m (depending on room arrangement and materials in the building)

Devices to teach in
Teach in of up to 40 devices:

- 1 EnOcean® centre/gateway
- WaterSensor con (20x)
- WaterSensor eco (10x)
- WaterSensor BWS
- EnOcean® rocker switch open/close (10x)
- WWG water alarm unit

in any combination

i See operating instructions for detailed information on the range of the EnOcean® wireless module.

DG: G, PG: 4	Part no.	Price €
WaterControl 01 G¾	42675	
WaterControl 01 G1	42676	
WaterControl 01 G1¼	42677	
WaterControl 01 G1½	42678	

Temperature and pressure measuring instrument TDM 51 F

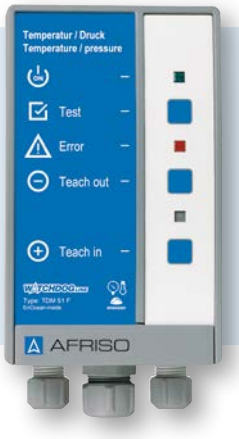

- **Ideal for measuring a great variety of in domestic technology applications**
- **Pressure and temperature sensors can be connected**
- **Integrated mains voltage monitoring**
- **EnOcean®-inside**

A Page 116

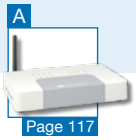

A Page 117

Application

For measuring pressure and temperature in domestic technology applications such as filling pressure in the heating system, level in fuel oil tanks or cisterns, layer temperature in hot water storage tanks or system temperatures (e.g. flow, return).

Description

The temperature and pressure measuring instrument TDM 51 F features five inputs for Pt 1000 temperature sensors and a RS 485 Modbus connection for digital temperature sensors. The measured data is transmitted to the AFRISOhome gateway HG 01 via an integrated EnOcean® wireless module. The measured data is visualised on the AFRISOhome application. If the measured value is out of range, groups of persons (e.g. owner or janitor) can be notified selectively. TDM 51 F monitors the mains voltage and sends an alarm message in the case of a power outage. EnOcean® wireless technology allows for integration into building control systems.

Technical specifications

Operating temperature range
Ambient: -5/+55 °C

Supply voltage
AC 100–240 V

Nominal power
2.5 VA

Housing
Wall mounting housing made of impact-resistant plastic (ABS)
W x H x D: 100 x 188 x 65 mm
Weight: 430 g
Degree of protection: IP 40 (EN 60529)

Inputs
- 5 x Pt 1000 (2-wire), measuring range: -100/+300 °C
- 1 x Modbus RTU (RS 485)

Accuracy
Temperature: +/-0.5 K
Pressure: Depends on sensor used

EnOcean® wireless
EEP: Generic Profile (GP)
Frequency: 868.3 MHz
Transmission power: Max. 10 mW
Range: 10 to 30 m (depending on room arrangement and materials in the building)

Scope of delivery
- Control unit with EnOcean® wireless module

i

See operating instructions for detailed information on the range of the EnOcean® wireless module.

See catalogue INDUSTRIAL TECHNOLOGY, chapters 3 / 4, for temperature and pressure sensors.

DG: G, PG: 4	Part no.	Price €
Temperature and pressure measuring instrument TDM 51 F	78089	

Digital tank contents indicator DTA 20 E

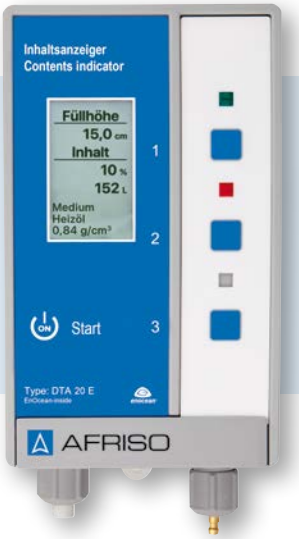

- **Plug & play level indicator for smart home systems based on EnOcean® wireless**
- **Daily measurement and worldwide access to consumption data**
- **Local display and push message (adjustable) when minimum level is reached**
- **For fuel oil, (bio) diesel, water and other media with a density between 0.5 and 1.5 g/cm³**

A Page 117 | A Page 116 | A Page 10 | A Page 128

5

Application

Location-independent level measurement with digital display and minimum level signal (reserve level alarm). If the product is operated in conjunction with the AFRISOhome gateway, the tank operator/ owner can read the level on a mobile device in addition to the local display. Suitable for tanks up to 400 cm liquid level. For fuel oil EL, L or diesel fuel, FAME 100 % as biodiesel (EN 14214) and water (no drinking water!). In addition, DTA 20 E can be used for level measurement with all non-corrosive liquids with a density from 0.5 to 1.5 g/cm³. Remote measurements (measuring line) up to 15 m.

Description

The electro-pneumatic tank contents indicator DTA 20 E consists of a control unit with with power supply unit, an EnOcean® wireless module, a digital display and a measuring line. Measured values are displayed in litres, % and liquid level (cm). Simple operation and setup via three function keys at the device. DTA 20 E measures the level (adjustable interval) and transmits it to the AFRISOhome gateway via EnOcean® wireless. In addition, measurements can be taken by means of pressing the control key (Push-to-Read function). If the level falls below a minimum level that is freely adjustable as a percentage, the backlight of the display flashes red to indicate an alarm during the measurement. In addition to indication on the local display, the tank owner/operator can receive a push message on the smartphone or tablet. Standard tank shapes (linear, spherical, cylindrical and horizontal) are stored.

Technical data

Functions
Periodic level measurement (1 to 240 hours) with wireless transmission to master systems such as AFRISOhome gateway
Push-to-Read level measurement

Measuring range (tank height)
0/400 cm (fuel oil)
0/350 cm (water)

Measuring accuracy
±1.0 cm

Operating temperature range
Ambient: 0/50 °C
Storage: -20/+65 °C
Medium: 0/50 °C

Display
Multi-coloured, backlit graphical display (30 x 50 mm):
- White = Operation
- Red = Alarm
- Green = Setup

Indication of litres (5 digits), % or liquid level in cm

Measuring line
PVC hose 4 x 1 mm
Length 20 m
Balance chamber stainless steel

Supply voltage
AC 100–240 V

Minimum alarm
Backlight flashes red
Push message to mobile devices

Housing
Wall mounting housing made of impact-resistant plastic (ABS)
W x H x D: 100 x 188 x 65 mm
Degree of protection: IP 20 (EN 60529)

EnOcean® wireless
EEP: Generic Profile (GP)
Frequency: 868.3 MHz
Transmission power: Max. 10 mW
Range: 10 to 30 m (depending on room arrangement and materials in the building)

Scope of delivery
- Control unit with power supply unit
- Pneumofix 2:
  20 m measuring line with bottom part, connection kit for G½, G1, G1½ and G2, 25 x nail cable clips, hose adapter (4 mm), mounting accessories

Necessary additional components
AFRISOhome gateway

DG: L, PG: 4	Part no.	Price €
DTA 20 E with Pneumofix 2	52146	
DTA 20 E without Pneumofix 2	52156	

i
See operating instructions for detailed information on the range of the EnOcean® wireless module.

Wireless smoke alarm ASD

- **Triggers an alarm before the smoke concentration becomes dangerous**
- **Wireless transmission, cyclically (function check) and in the case of state transitions**
- **Compact, unobtrusive design**
- **Additional room temperature measurement (ASD 10)**

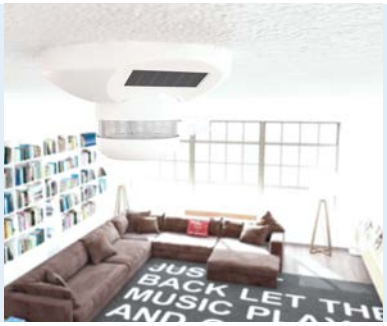

Z Page 116

A Page 117

5

Application

For detection of fumes and smoke gas in living spaces. Audible alarm when a defined smoke concentration is exceeded.

Description

The photoelectric smoke alarm ASD consists of a sensor head and a mounting base with integrated EnOcean® wireless module. The sensor head features a permanently installed lithium battery with a service life of up to 10 years for reliable, long-term fire protection. A fire alarm is indicated by an alarm tone with approx. 85 dB and a flashing LED. The alarms are transmitted via the EnOcean® wireless module.
In addition, ASD 10 transmits the ambient temperature. A photovoltaic cell generates the required energy. A battery can be inserted in the base for use in darker environments.
Wireless smoke alarm ASD 10 with transmission of fire alarm and current room temperature.
Wireless smoke alarm ASD 20 with transmission of fire alarm and battery state at the mounting base for EnOcean® wireless module.
The AFRISOhome gateway lets you program a great variety of scenarios for an alarm, for example switching on the lights for the escape route, opening of shutters for escaping, push messages, etc.
The EnOcean® wireless module is not only used for transmission, but also for regular function checks.

Technical specifications

Operating temperature range
Ambient: 0/+40 °C
Storage: -20/+60 °C
Max. humidity, non-condensing

Supply voltage
Sensor head: Permanently installed lithium battery
Base: Energy harvesting (via photovoltaic cell) or 1/2 AA lithium battery, DC 3.6 V (with daylight less than 200 lx)

Housing
Plastic housing (PC)
Colour: White, similar to RAL 9003
ø x H: 87 x 48 mm
Weight: 38 g
Degree of protection: IP 54 (EN 60529)

EnOcean® wireless
EEP: A5-30-03 (ASD10)/ F6-05-02 (ASD20)
Frequency: 868.3 MHz
Transmission power: Max. 10 mW
Range: 10 to 30 m (depending on room arrangement and materials in the building)

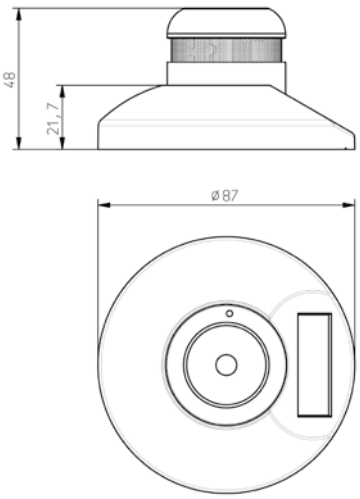

i See operating instructions for detailed information on the range of the EnOcean® wireless module.

DG: L, PG: 4	Part no.	Price €
Wireless smoke alarm ASD 10	**61245**	
Wireless smoke alarm ASD 20	**61249**	
Spare part		
Sensor head smoke alarm ASD 10 SH	**61246**	

Wireless heat detector AHD 10

NEW enocean®

- **Triggers an alarm if the temperature rises rapidly and if it exceeds 58 °C**
- **Wireless transmission, cyclically (function check) and in the case of state transitions**
- **Compact, unobtrusive design**
- **Additional room temperature measurement**

A Page 116

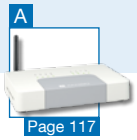

A Page 117

5

Application

For detection of heat and fire in living spaces. Audible alarm and direct transmission to the AFRISOhome gateway if the temperature rises rapidly or if it exceeds 58 °C. AHD 10 is ideal for use in rooms subject to generation of smoke or vapour (such as kitchens, bathrooms) or in which dust, dirt and exhaust gases can develop (such as workshops, garages). Recommended for each application where smoke alarms cannot be used due to possible false alarms.

Description

The heat detector AHD 10 consists of a sensor head and a mounting base with integrated EnOcean® wireless module. The sensor head features a permanently installed lithium battery with a service life of up to 10 years for reliable, long-term fire protection. A fire alarm is indicated by a flashing LED and a sound sequence with the maximum alarm sound pressure of 85 dB. The alarm is also transmitted via the EnOcean® wireless module. In addition, AHD 10 transmits the ambient temperature. A photovoltaic cell generates the required energy. A battery can be inserted in the base for use in darker environments.
Each heat detector has a unique ID so that the recipient can distinguish the individual heat alarms if multiple sensors are used. The AFRISOhome gateway lets you program a great variety of scenarios for an alarm, for example switching on the lights for the escape route, opening of shutters for escaping, push messages, etc. The EnOcean® wireless module is not only used for transmission, but also for regular function checks.

Technical specifications

Operating temperature range

Ambient:	-10/+50 °C
Storage:	-20/+60 °C
Max. humidity:	90 %, non-condensing

Supply voltage

Sensor head:	Permanently installed lithium battery
Base:	Energy harvesting (via photovoltaic cell) or ½ AA lithium battery, DC 3.6 V (with daylight less than 200 lx)

Housing

Plastic housing (PC/ABS)

Colour:	White, similar to RAL 9003
ø x H:	86 x 45 mm
Weight:	38 g
Degree of protection:	IP 30 (EN 60529)

EnOcean® wireless

EEP:	A5-30-03
Frequency:	868.3 MHz
Transmission power:	Max. 10 mW
Range:	10 to 30 m (depending on room arrangement and materials in the building)

Approval

EN 54-5, class A1/R for heat detection systems

Scope of delivery

- Wireless mounting base
- Heat detector
- Mounting accessories

i

See operating instructions for detailed information on the range of the EnOcean® wireless module.

DG: L, PG: 4	Part no.	Price €
Wireless heat detector AHD 10	**61550**	
Spare part		
Sensor head heat alarm AHD 10 SH	**61551**	

Single room temperature controller CosiTherm® Wireless

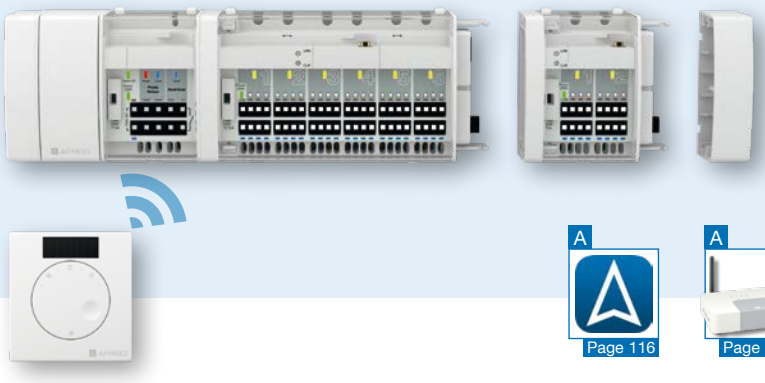

- Temperature controller for the connection of thermal actuators
- For manifold systems for heating and cooling
- Worldwide access via AFRISOhome gateway

A Page 116
A Page 117
A Page 104

5

Application

Controls the temperature of individual rooms in connection with manifold systems for heating or cooling. EnOcean® wireless technology for integration into building automation systems.

Description

The base version of the single room temperature controller CosiTherm® Wireless consists of a base module, at least one controller module with two or six independent control circuits and a corresponding number of room temperature sensors. The controller modules can be interconnected in a modular way to account for the number of control circuits/rooms. One room temperature sensor is required per control circuit; the standard version is battery-less and connected to the controller module via the EnOcean® wireless technology. The room temperature sensor measures the actual temperature in the room. The reference temperature is adjusted via the rotary knob of the room temperature sensor or via the app AFRISOhome. The controller module compares the actual temperature and the reference temperature and controls the volume flow of the heating/cooling water via the thermal actuators of the manifold system.
The base module features two independently programmable switching channels for temperature reduction, nine programmable memory blocks and a valve and pump protection function. The additional pump running time is adjustable. The terminals of the controller modules are colour-coded for easy assignment to the wires of the thermal actuators; in conjunction with the DIN rail snap connectors at the rear of the housing, this facilitates installation.
With an AFRISOhome gateway, it is possible to remotely check and, if necessary, adjust the room temperatures via the AFRISOhome app (for example, when coming back from winter vacation). This flexible remote control of the room temperature combines multiple benefits: you can increase living comfort and reduce energy costs.
In conjunction with additional AFRISO products with EnOcean® wireless technology, the user can configure a whole range of fully customisable, extensible applications.

Functions

Base module BM
- Power supply of the thermal actuators (AC 230 V)
- Switchover of the system to "Heating" or "Cooling"
- Control of the heating/cooling pumps

Controller module
- Comparison of actual and reference temperatures
- Control heating/cooling water via connected thermal actuators
- Connection of two or six control circuits, extensible
- Connection to room temperature sensors EnOcean® wireless technology

Single room temperature controller CosiTherm® – wireless

Technical specifications

Connections
Base module BM
Max. 9 controller modules F2
or 3 controller modules F6
Controller module F2
Max. 2 room temperature sensors and
8 actuators as well as external antenna
Controller module RM F6
Max. 6 room temperature sensors and
24 actuators as well as external antenna

Operating temperature range
Ambient/storage: -10/+60 °C

EnOcean® wireless
Frequency: 868.3 MHz
Transmission power: Max. 10 mW
Range: 10 to 30 m (depending on room arrangement and materials in the building)

Base module BM

Supply voltage
AC 230 V, 50–60 Hz

Nominal power
1 VA

Housing
Plastic housing PC/ABS
Colour: Light grey, similar to RAL 7047
W x H x D: 122 x 92 x 45 mm
Degree of protection: IP 20 (EN 60529)

Weight
215 g

Controller module

Supply voltage
AC 230 V (via base module BM)

Nominal power
Controller module F2: 0.3 W
Controller module F6: 0.5 W

Housing (W x H x D)
Plastic housing PC/ABS
Controller module F2: 73 x 92 x 45 mm
Controller module F6: 162 x 92 x 45 mm
Degree of protection: IP 20 (EN 60529)

Weight
Controller module F2: 130 g
Controller module F6: 260 g

5

i See operating instructions for detailed information on the range of the EnOcean® wireless module.

DG: G, PG: 4	Part no.	Price €
Base module BM	78112	
Controller module F2A with external antenna, for 2 control circuits	78123	
Controller module F6A with external antenna, for 6 control circuits	78124	

Single room temperature controller CosiTherm® – wireless

Types and dimensions (mm)

Base module BM

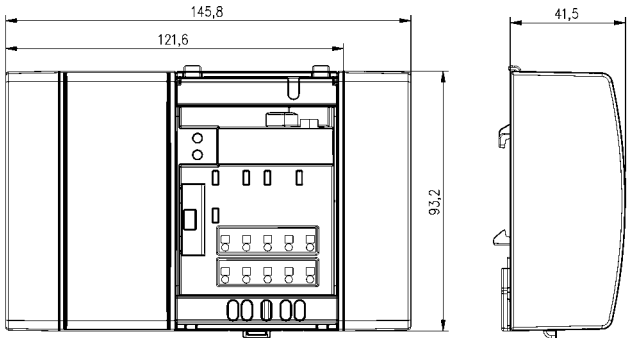

Controller module F2

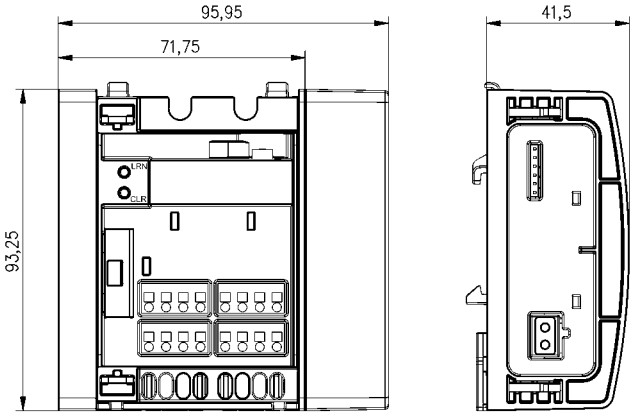

Controller module F6

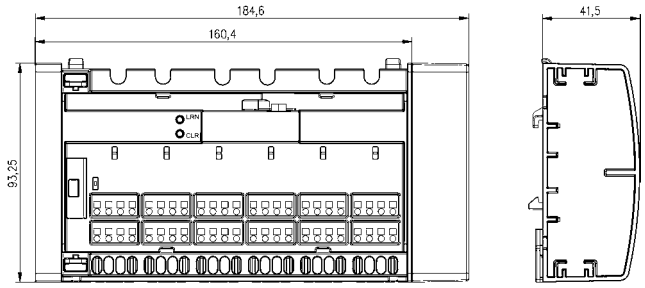

Room temperature sensor FT/FTF – wireless

- **Extremely flat with a height of 12.5 mm**
- **Wireless operation (photovoltaic cell or battery)**
- **Flexible location-independent use anywhere in buildings**

A Page 101 | A Page 116 | A Page 117

reddot award 2014 winner

5

Application

Determination of the actual ambient temperature and adjustment of the reference value for the room temperature.

Description

The room temperature sensor FT transmits the actual ambient temperature as well as the reference room temperature via the integrated EnOcean® wireless module to the single room temperature controller CosiTherm® Wireless or to the AFRISOhome gateway. The room temperature sensor FTF also transmits the current humidity value. The reference value for the room temperature is adjusted by means of the integrated rotary knob. The actual temperature in rooms with an underfloor heating system is compared to the reference temperature on an ongoing basis. If there is a difference, the single room temperature controller CosiTherm® Wireless adapts volume flows of the heating/cooling water via the thermal actuators of the manifold system. The energy required to send reference temperature and actual temperature values is generated by means of an integrated photovoltaic cell; it is also possible to use a standard battery. The AFRISOhome gateway transmits alarm messages and changes in temperature and/or humidity via WLAN or LAN to the person in charge (for example, to the owner, the facility manager, the janitor or other configured contacts); the message includes information on which room temperature sensor has signalled the change. The AFRISOhome gateway in conjunction with additional AFRISO products with EnOcean® wireless technology allows the user to configure a whole range of fully customisable, extensible applications.

Technical specifications

Operating temperature range
Ambient: -20/+60 °C
Storage: -20/+60 °C

Temperature adjustment range
8/30 °C

Temperature measurement
0/40 °C
Accuracy: ± 1 K

Humidity measurement
With room temperature sensor FTF only
Room humidity: 0/100 % r.h.
Accuracy: ± 5 % r.h.

Supply voltage
Energy harvesting (via photovoltaic cell) or type 1632 battery, DC 3 V
(with daylight less than 200 lx)

Housing
Plastic housing PC
Colour: White, similar to RAL 9003
W x H x D: 78 x 82.5 x 12.5 mm
Weight: 43 g
Degree of protection: IP 30 (EN 60529)

EnOcean® wireless
EEP: A5-10-03 (FT) or A5-10-12 (FTF)
Frequency: 868.3 MHz
Transmission power: Max. 10 mW
Range: 10 to 30 m (depending on room arrangement and materials in the building)

Scope of delivery
- Room temperature sensor FT/FTF
- 4 x adhesive dots
- Without battery

Necessary additional components
- CosiTherm® Wireless and/or
- AFRISOhome gateway

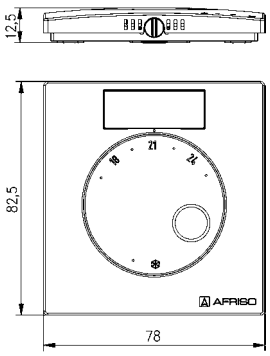

i
See operating instructions for detailed information on the range of the EnOcean® wireless module.

DG: L, PG: 4	Part no.	Price €
Room temperature sensor FT (temperature)	78111	
Room temperature sensor FTF (temperature, humidity)	78119	

Wireless transmitter FTM T/TF for temperature and/or humidity

- **Flexible location-independent use anywhere in buildings**
- **Wireless transmission, cyclically (function check and transmission of values)**
- **Wireless operation (photovoltaic cell or battery)**
- **Easy mounting via wall bracket**

A Page 116

A Page 117

A Page 115

Wall bracket FTM with snap-on mounting.

5

Application

Determination of the ambient temperature and air humidity at a defined location.

Description

The temperature sensor FTM T transmits the current ambient temperature via the integrated EnOcean® wireless module to the AFRISOhome gateway. The temperature and humidity sensor FTM TF also transmits the value of the current air humidity.
Based on the event message, the AFRISOhome gateway can trigger measures. The energy required to send a wireless telegram is generated by means of the integrated photovoltaic cell. An optional battery can be used for application in darker rooms. The ambient temperature can be readjusted via the single room temperature controller CosiTherm® Wireless in order to keep the room temperature from rising or falling. The AFRISOhome gateway transmits alarm messages and changes in temperature and/or humidity via WLAN or LAN to the person in charge (for example, to the owner, the facility manager, the janitor or other configured contacts); the message includes information on which temperature sensor has signalled the change.
The AFRISOhome gateway in conjunction with additional AFRISO products with EnOcean® wireless technology allows the user to configure a whole range of fully customisable, extensible applications.

Technical specifications

Operating temperature range

Ambient:	0/40 °C
Storage:	-20/+60 °C

Measuring range

Temperature:	0/40 °C
Accuracy:	±1 K
Humidity:	0/100 % r.h.
Accuracy:	±5 % r.h.

Supply voltage

Energy harvesting (via photovoltaic cell) or 1/2 AA lithium battery, DC 3.6 V (with daylight less than 200 lx)

Housing

Colour:	White, similar to RAL 9003
W x H x D:	52 x 40 x 17 mm
Weight:	24 g
Degree of protection:	IP 30 (EN 60529)

EnOcean® wireless

EEP:	A5-02-05 (FTM T) or A5-04-01 (FTM TF)
Frequency:	868.3 MHz
Transmission power:	Max. 10 mW
Range:	10 to 30 m (depending on room arrangement and materials in the building)

Scope of delivery

- Temperature sensor
- Wall bracket
- 2 x adhesive dots
- Without battery

Necessary additional components

- CosiTherm® Wireless and/or
- AFRISOhome gateway

i

See operating instructions for detailed information on the range of the EnOcean® wireless module.

DG: L, PG: 4	Part no.	Price €
Temperature sensor FTM T	78144	
Temperature and humidity sensor FTM TF	78145	

Temperature and humidity sensor FTM 20 TF

NEW enocean®

- Maintenance-free battery-less operation
- Solar-operated energy storage module for several days of operation even in darkness
- Either easy adhesive mounting or placement by means of base
- Battery operation optionally possible

FTM 20 TF with base and triangular cap

A Page 116 | A Page 117 | A Page 108

5

Application

Wireless sensor for determination of the ambient temperature and air humidity at a defined location and transmission to AFRISOhome gateway.

Description

The temperature sensor FTM 20 TF measures the ambient temperature and the humidity at regular intervals. Significant changes of the sensor data are immediately transmitted to the AFRISOhome gateway; they can be used as parameters to control actuators such as the radiator actuators AVD 30 or extractor fans with EnOcean wireless technology.
The energy required to send a wireless telegram is generated by means of the integrated photovoltaic cell. The integrated energy storage module allows for operation for several days even in total darkness. In permanently dark environments (such as basements or warehouses) it is also possible to use a button cell battery.
A double-sided adhesive strip allows for extremely easy mounting of the compact housing to walls or furniture. It is possible to plug on a metal plate which serves as a base for placing the sensor on a shelf, a window sill or a sideboard.

The AFRISOhome gateway in conjunction with additional AFRISO products with EnOcean® wireless technology allows the user to configure a whole range of fully customisable, extensible applications.

Technical specifications

Operating temperature range
Ambient: -20/+60 °C

Measuring range
Temperature: -20/+60 °C
Accuracy: ±0.5 K
Humidity: 0/100 % r.h.
Accuracy: ±4.5 % r.h.

Supply voltage
Energy harvesting
(via photovoltaic cell)
or CR 1225 button cell

Housing
Colour: White, similar to RAL 9010
W x H x D: 76.2 x 22 x 15 mm
Weight: 20 g
Degree of protection: IP 40 (EN 60529)

Operation start up time with empty energy storage module
Typically: 2.5 min at 400 lx/25 °C

EnOcean® wireless
EEP: A5-04-03
Frequency: 868.3 MHz
Transmission power: Max. 10 mW
Range: 10 to 30 m
(depending on room arrangement and materials in the building)

Scope of delivery
- Temperature sensor
- Cap triangular or quadrangular
- Base
- 1x adhesive dot
- Without battery

Necessary additional components
- AFRISOhome gateway

i See operating instructions for detailed information on the range of the EnOcean® wireless module.

DG: L, PG: 4	Part no.	Price €
Temperature and humidity sensor FTM 20 TF	61255	

Bidirectional wireless actuator AVD 20-D

- **Wireless control of radiators**
- **Large display, intuitive operation via menus**
- **Increased energy efficiency of the heating system in the building**
- **Exactly the amount of heat required per room via remote control**

A Page 116

A Page 117

5

Application

For setting and controlling the room temperature directly at the radiator and for integration into the building automation system.

Description

AVD 20-D replaces the conventional thermostat head. The large display and the beautifully designed wheel ensure intuitive operation directly at the radiator. Bidirectional communication via the standardised EnOcean® wireless technology turns the unit into an intelligent actuator. Integrated functions such as the detection of the flow temperature, detection of both limit positions as well as signalling of the exact valve position provide the decisive data for an optimised heating system.
With an AFRISOhome gateway and via the Internet, it is possible to remotely check and, if necessary, adjust the room temperatures via the AFRISOhome app (for example, when coming back from winter vacation). This flexible remote control of the room temperature combines multiple benefits: you can increase living comfort and reduce energy costs. In conjunction with additional AFRISO products with EnOcean® wireless technology, the user can configure a whole range of fully customisable, extensible applications.

Technical specifications

Operating temperature range
Permissible flow temperature: 15/90 °C

Drive

Valve stroke:	5.5 mm
Stroke resolution:	< 4 mm/step
Adjustment force:	Depends on valve, max. 140 N

Battery service life: Up to 2 years

Supply voltage
3 V (2 x AA lithium batteries)

Housing

Colour:	White, similar to RAL 9010
ø x H:	56 x 77 mm (99 mm incl. connection piece)
Display:	33 x 27 mm
Weight:	Approx. 250 g (with battery)

Degree of protection: IP 30 (EN 60529)

Valve connection
M 30 x 1.5 mm

EnOcean® wireless

EEP:	A5-20-4
Frequency:	868.3 MHz
Transmission power:	Max. 10 mW
Range:	10 to 30 m (depending on room arrangement and materials in the building)

Scope of delivery
- Wireless actuator
- 2 x lithium ion batteries (2 x 1.5 V)

i
See operating instructions for detailed information on the range of the EnOcean® wireless module.

DG: L, PG: 4	Part no.	**Price €**
Wireless actuator AVD 20-D	78966	

Bidirectional radiator wireless actuator AVD 30

NEW enocean®

- **Battery-less control of radiators**
- **Maintenance-free without additional operating costs**
- **Connection M30 x 1.5: Easy replacement of existing thermostat heads**
- **Low-noise operation**

Page 106

Page 116

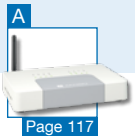

Page 117

5

Application

For wireless and battery-less temperature control in individual rooms. Ideal for heating, ventilation and air conditioning systems. AVD 30 is particularly suitable for use in schools and public buildings in which the temperature may only be adjusted by authorised staff. Adjustments are made exclusively via the AFRISOhome app or via a central operating unit. It is advisable to measure the actual temperature via an external room temperature sensor (for example, FTM 20 TF).

Description

Wireless, bidirectional radiator actuator AVD 30 based on EnOcean® wireless, with integrated frost protection function. AVD 30 requires no batteries; to generate the energy required for operation and communication between the AFRISOhome gateway it uses the temperature difference between the room and the radiator. An internal energy storage module helps to prevent conditions with insufficient energy supply during operation. If the energy storage module is empty, the actuator opens the radiator valve by 50 % and switches to idle state. Once a sufficient volume of heating water flows, AVD 30 starts automatically and resumes controlling the room temperature. In sparely heated rooms, it may be necessary to charge the energy storage module via the integrated micro USB port; the actuator triggers a corresponding alarm on time.

AVD 30 controls, for example, the room temperature in a room with radiators. For this purpose, the actual temperature is measured directly at the actuator or with an additional room temperature sensor. The reference temperature can be set, for example, via the AFRISOhome app in combination with an AFRISOhome gateway. The actual temperature and the reference temperature in the AFRISOhome gateway are compared every 10 minutes and necessary change requests are transmitted to the actuator. Additional configurable conditions can be included in the temperature control (for example, temperature reduction if a window is open or in the case of absence). This flexible control of the room temperature combines multiple benefits: you can increase living comfort and reduce energy and operating costs.

Technical specifications

Drive
Valve stroke: Max. 4.5 mm
Adjustment time: 0.24 mm/s
Adjustment force: Max. 80 N

Supply voltage
Energy harvesting via temperature difference radiator <> room

Housing
W x H x D: 60 x 63 x 59.5 mm
Weight: Approx. 225 g
Degree of protection: IP 30 (EN 60529)

Connection
M 30 x 1.5 mm

EnOcean® wireless
EEP: A5-20-1
Frequency: 868.3 MHz
Transmission power: Max. 10 mW
Range: 10 to 30 m (depending on room arrangement and materials in the building)

Necessary additional components
- AFRISOhome Gateway

i See operating instructions for detailed information on the range of the EnOcean® wireless module.

DG: L, PG: 4	Part no.	Price €
Bidirectional wireless actuator AVD 30	75008	

CO_2 sensor

- **Monitoring of room air quality**
- **Compact, unobtrusive design**
- **Visual indication of concentration**
- **Mains plug version similar to Schuko® CEE mains plug**
- **With or without EnOcean® wireless technology**

Flexible use in buildings due to integrated mains plug.

A Page 116
A Page 117

5

Application

For continuous monitoring of the carbon dioxide (CO_2) concentration in the ambient air. Application in rooms in which many persons work, study or live and where carbon dioxide levels may consequently be elevated. High concentrations of carbon dioxide in the ambient air reduce the ability of persons to concentrate and perform. Ideal for educational institutions, training/meeting rooms, office areas and household.

Description

CO_2 sensor with infrared technology in plastic housing, for connection to a standard CEE socket. The CO_2 concentration is indicated directly at the device by a colour scale:

- LED green: No ventilation required
- LED yellow: Ventilation recommended
- LED red: Ventilation required

The version CO_2 sensor F (with EnOcean® wireless module) sends the measured values to the AFRISOhome gateway for further processing and initiation of appropriate action. For example, it is possible to start a room ventilation system in order to reduce the CO_2 concentration. The current carbon dioxide concentration is also displayed by the AFRISOhome app. The AFRISOhome gateway in conjunction with additional AFRISO products with EnOcean® wireless technology allows the user to configure a whole range of fully customisable, extensible applications.

Technical specifications

Measuring range
0/2,000 ppm

Measuring accuracy
400/1,250 ppm: ±30 ppm or ±3 % of measured value
1,250/2,000 ppm: ±30 ppm or ±5 % of measured value

Operating temperature range
Ambient: 0/50 °C
Storage: -40/+70 °C
Humidity: Max. 95 % r.h.

Housing
Plastic housing (PC/ABS),
Colour: White, similar to RAL 9003
W x H x D: 69 x 69 x 31 mm
Weight: 108 g
Degree of protection: IP 20 (EN 60529)

Supply voltage
AC 100–240 V via Schuko® CEE mains socket

Nominal power
2.5 VA

Visual indication
LED green: < 1,000 ppm CO_2
LED yellow: 1,000–1,500 ppm CO_2
LED red: > 1,500 ppm CO_2

EnOcean® wireless
EEP: A5-09-09
Frequency: 868.3 MHz
Transmission power: Max. 10 mW
Range: 10 to 30 m (depending on room arrangement and materials in the building)

Necessary additional components
- AFRISOhome Gateway

i See operating instructions for detailed information on the range of the EnOcean® wireless module.

DG: L, PG: 4	Part no.	**Price €**
CO_2 sensor F, with EnOcean® wireless module	**61240**	

Universal wireless transmitter FTM

- **Equipment can be integrated into building automation systems via voltage-free contact**
- **Transmitters for a wide range of AFRISO probes**
- **Compact design**

A Page 116 | A Page 117 | A Page 115

Connection cable for easy device connection

5

Application

Monitoring of the switching states of voltage-free contacts. In addition, transmission of ambient temperature.

Description

The universal wireless transmitter can integrate any device with a voltage-free contact into a building automation system. Examples comprise the alarm relays of heating systems or status messages of alarm systems. The voltage-free contact is supplied with voltage by the universal wireless transmitter. A defined recipient is immediately notified of each state transition is via EnOcean® wireless. The universal wireless transmitter is used as a transmission unit for many AFRISO probes such as Minimelder or Maximelder, pressure gauges with electrical contact, etc. The energy required to send the message with the state transition is generated by means of an integrated photovoltaic cell; it is also possible to use a battery in dark rooms.The AFRISOhome gateway transmits alarm messages and state transition messages via WLAN or LAN to the person in charge (for example, to the owner, the facility manager, the janitor or other configured contacts); the message includes information on which universal transmitter radio FTM has signalled the state transition.
The AFRISOhome gateway in conjunction with additional AFRISO products with EnOcean® wireless technology allows the user to configure a whole range of fully customisable, extensible applications.

- Floor water probe (for water detection)
- Minimelder (for signalling minimum levels in tanks)
- Maximelder (for signalling maximum levels in tanks)
- Pressure gauge with electrical contact (for signalling limit values)

Technical specifications

Operating temperature range
Ambient: 0/40 °C
Storage: -20/+60 °C

Temperature measuring range
Measuring range: 0/40 °C
Accuracy: ±1 K

Supply voltage
Energy harvesting (via photovoltaic cell) or 1/2 AA lithium battery, DC 3.6 V (with daylight less than 200 lx)

Housing
Colour: White, similar to RAL 9003
W x H x D: 52 x 40 x 17 mm
Weight: 22 g
Degree of protection: IP 54 (EN 60529)

EnOcean® wireless
EEP: A5-30-03
Frequency: 868.3 MHz
Transmission power: Max. 10 mW
Range: 10 to 30 m (depending on room arrangement and materials in the building)

Scope of delivery
- Universal wireless transmitter FTM
- Wall bracket
- 2 x adhesive dots
- Without battery

Necessary additional components
- AFRISO probe with plug-in connector (see Accessories)
- AFRISOhome gateway

i
See operating instructions for detailed information on the range of the EnOcean® wireless module.

DG: L, PG: 4	Part no.	Price €
Universal wireless transmitter FTM	78143	
Connection cable 2 m	78974	

Wireless rocker switch FT4F-rw

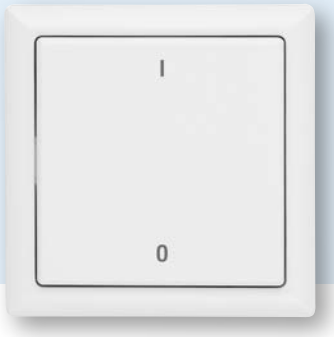

- **Energy harvesting: Generates the energy for the wireless telegram when button is pressed**
- **No battery, no connection cable required**
- **Flexible and location-independent use**

Dual rocker DWF

A Page 96
A Page 116
A Page 117

5

Application

For switching wireless actuators. The switch automatically generates the energy required for wireless telegrams when the switch is operated. Connection cables or batteries are not required.

Description

Flexible use with single or dual rocker. If a single rocker is used, two signals can be transmitted: top part of rocker pressed, bottom part of rocker pressed. Switches with dual rockers can transmit four signals: Two rockers, top and bottom parts pressed. The holding plate can be screwed to a plane surface or glued to walls, glass or furniture by means of the enclosed adhesive film. The unit can also be easily screwed to an existing 55 mm switch box using the existing screw sockets. It is possible to directly teach the wireless rocker switch into many EnOcean® actuators such as the water valve WaterControl 01 or indoor siren AIS 10. The wireless rocker switch can also be operated as a component of the AFRISOhome gateway.

Technical specifications

Supply voltage
Energy harvesting (via press of button)

Housing

Colour:	White, similar to RAL 9003
W x H:	80 x 80 mm, outside 63 x 63 mm, inside dimensions of frame, 15 mm height

EnOcean® wireless

EEP:	RPS
Frequency:	868.3 MHz
Transmission power:	Max. 10 mW
Range:	10 to 30 m (depending on room arrangement and materials in the building)

Scope of delivery
- Frame R1F
- 1 x rocker WF
- 1 x dual rocker DWF
- 1 x frame BRF
- 1 x plate HP
- 1 x wireless module
- 1 x adhesive film

i
See operating instructions for detailed information on the range of the EnOcean® wireless module.

DG: L, PG: 4	Part no.	**Price €**
Rocker switch FT4F-rw	78972	

Door and window contact AMC 20

- Maintenance-free battery-less operation
- Solar-operated energy storage module for several days of operation even in darkness
- Easy adhesive mounting at doors and windows
- Battery operation optionally possible

A Page 114 | A Page 116 | A Page 117

5

Application

Magnetic contact sensor for monitoring the states OPEN and CLOSED and for transmission to the AFRISOhome gateway or to stand-alone wireless components such as the indoor siren AIS 10 PRO.

Description

The door and window contact AMC 20 is a battery-less, maintenance-free magnetic contact wireless module. The energy required to send an EnOcean® telegram is generated by means of an integrated photovoltaic cell. The integrated energy storage module allows for operation for several days even in total darkness. In permanently dark environments (such as basements or warehouses) it is also possible to use a button cell battery. The module monitors the presence of a magnet at the side by means of an integrated Reed contact and signals status changes. A double-sided adhesive strip allows for extremely easy mounting of the compact housing to windows, door frames or cabinet doors.

The AFRISOhome gateway in conjunction with additional AFRISO products with EnOcean® wireless technology allows the user to configure a whole range of fully customisable, extensible applications.

Technical specifications

Operating temperature range
Ambient: -25/+65 °C

Supply voltage
Energy harvesting
(via photovoltaic cell)
or CR 1225 button cell

Housing
Colour: White, similar to RAL 9010
Reed contact: 76.2 x 22 x 15 mm
Magnet housing: 20 x 10 x 1.5 mm
Weight: 20 g
Degree of protection: IP 40 (EN 60529)

Reed contact
1 x integrated

Operation start up time with empty energy storage module
Typically: 2.5 min at 400 lx/25 °C

EnOcean® wireless
EEP: D5-00-01
Frequency: 868.3 MHz
Transmission power: Max. 10 mW
Range: 10 to 30 m
(depending on room arrangement and materials in the building)

Scope of delivery
- Door and window contact
- Magnet
- 2 x adhesive tape

i
See operating instructions for detailed information on the range of the EnOcean® wireless module.

DG: L, PG: 4	Part no.	Price €
Door and window contact AMC 20	61254	

Indoor siren AIS 10

- Compact, unobtrusive design
- Mains plug version similar to Schuko CEE mains plug
- Loud 90 dB alarm tone
- Integrated repeater function
- Can be used as a stand-alone device without gateway

A Page 116

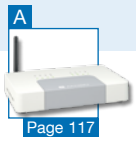

A Page 117

Application

Can be used as a stand-alone solution with EnOcean® wireless products or integrated in Smart Home systems as an alarm siren.

Description

The indoor siren AIS 10 allows for versatile use in building technology applications. As a mains plug version, you can plug it into any power outlet and the siren is ready for operation. The siren lets you teach in up to 20 products via EnOcean® wireless. This includes, among others, door and window contacts, water sensors, smoke alarms, switches, AFRISO WATCHDOG-LINE alarm units and additional indoor sirens. If one of the connected EnOcean® responds, a radio signal is sent to the product. The alarm signals from the corresponding sensor are repeated at intervals of one second to ensure reliable transmission to master networks. The LED emits a loud alarm tone of 90 dB and the LED lights red. Once the cause of the alarm has been removed, the alarm tone is muted and the LED lights green. In addition, the product can be operated as a component of the AFRISOhome gateway. The siren can be controlled via a mobile device. AIS 10 also features a repeater function. The indoor siren monitors the mains voltage. In the case of power outage, an alarm signal is sent to a master network.

Technical specifications

Operating temperature range

Ambient:	0/50 °C
Storage:	-40/+70 °C
Humidity:	Max. 95 % r.h., non-condensing

Housing

Plastic housing (PC/ABS)

Colour:	White, similar to RAL 9003
W x H x D:	69 x 69 x 31 mm
Weight:	120 g

Supply voltage

AC 100–240 V via Schuko® CEE mains socket

Nominal power

2.5 VA

Alarm condition

Sound pressure: 90 dB

Visual indication

LED red:	Visual alarm
LED green:	Operation

EnOcean® wireless

EEP:	Generic Profile (GP)
Frequency:	868.3 MHz
Transmission power:	Max. 10 mW
Range:	10 to 30 m (depending on room arrangement and materials in the building)

Necessary additional components

- AFRISOhome Gateway

i See operating instructions for detailed information on the range of the EnOcean® wireless module.

DG: L, PG: 4	Part no.	Price €
Indoor siren AIS 10	61242	

Indoor siren AIS 10 PRO

- **Ideal as a stand-alone device for setting up a modular alarm system without a gateway**
- **Compact, unobtrusive design**
- **Version with mains plug**
- **Loud 90 dB alarm tone**
- **Integrated repeater function**

A Page 93

A Page 99

Z Page 112

5

Application

Alarm siren as a stand-alone solution for EnOcean® wireless products. You can teach in up to 20 EnOcean® wireless smart home devices into the siren. AIS 10 PRO allows you to create a modular alarm system with or without a gateway or a mobile devices.

Description

The indoor siren AIS 10 PRO allows for versatile use in building technology applications. As a mains plug version, you can plug it into any power outlet and the siren is ready for operation. The siren lets you teach in up to 20 smart home sensors via EnOcean® wireless. This includes, among others, door and window contacts, water sensors, smoke alarms, switches, universal wireless transmitters, window handles, AFRISO WATCHDOG-LINE alarm units and additional AFRISO AIS 10 PRO indoor sirens for alarm on additional floors. If one of the connected EnOcean® devices responds, a radio signal is sent to the indoor siren. The alarm signals from the corresponding sensor are repeated at intervals of one second to ensure reliable transmission. The indoor siren AIS 10 PRO emits a loud alarm tone and the LED lights red.

The following alarm scenarios can be distinguished:
Pre-alarm: LED red and beeping sound 1 x per second. After 5 seconds transition to main alarm.
Main alarm: LED red and 90 dB continuous alarm sound for 5 minutes. Finally transition to post-alarm.
Post-alarm: LED red and beeping sound 1 x per 5 seconds.

Once the cause of the alarm has been removed, the alarm tone is muted and the LED lights green. In addition, AIS 10 PRO can be operated as a component of the AFRISOhome gateway. If the device is operated as a stand-alone alarm system, the wireless rocker switch FT4F-rw must be integrated as an activation switch. The alarm system can operate in the operating states EXACT and FUZZY, depending on the presence of the persons in the building. In the operating state FUZZY, the LED lights green, in the operating state EXACT, it lights yellow. In the operating state FUZZY, only safety-related sensors such as water sensors, smoke alarms, rocker switches (used as "panic buttons") or WATCHDOG-LINE alarm units rigger an alarm. In addition, AIS 10 can be operated as a component of the AFRISOhome gateway. The siren can be controlled via a mobile device. AIS 10 also features a repeater function. When operated with an AFRISOhome gateway, the indoor siren also monitors the mains voltage. In the case of power outage, an alarm signal is sent to a master network.

Technical specifications

Operating temperature range

Ambient:	0/50 °C
Storage:	-40/+70 °C
Humidity:	Max. 95 % r.h., non-condensing

Housing
Plastic housing (PC/ABS)

Colour:	White, similar to RAL 9003
W x H x D:	69 x 69 x 31 mm
Weight:	120 g
Degree of protection:	IP 20 (EN 60529)

Supply voltage
AC 100–240 V via Schuko® power outlet

Nominal power
2.5 VA

Alarm condition
Sound pressure: 90 dB

Visual indication

LED red:	Alarm
LED yellow:	Alarm system EXACT
LED green:	Operation, alarm system FUZZY

EnOcean® wireless

EEP:	Generic Profile (GP)
Frequency:	868.3 MHz
Transmission power:	Max. 10 mW
Range:	10 to 30 m (depending on room arrangement and materials in the building)

i See operating instructions for detailed information on the range of the EnOcean® wireless module.

DG: L, PG: 4	Part no.	Price €
Indoor siren AIS 10 PRO	61256	

Accessories and spare parts for AFRISO Smart Home

PG: 4	Description	Suitable for: WaterSensor con/ WaterSensor BWS	Room temperature sensor FT/FTF	Wireless transmitter FTM	Smoke alarm ASD 10/20	WATCHDOG-LINE alarm units	CosiTherm® wireless	AFRISOhome gateway HG 01	Part no.	DG	Price €
	1/2 AA lithium battery	•		•	•				78100	L	
	CR 1632 coin cell		•						78132	G	
	Extension cable Cable length: 2 m	•		•					78141	L	
	Connection cable Cable length: 2 m Connector: One end for FTM, other end flying leads			•					78974	L	
	Adhesive antenna Cable length: 3 m Connector: Angular SMA connector						•		78175	G	
	Magnetic foot antenna Connector: Angular SMA connector						•		78167	G	
	Conductivity floor water probe con	•		•					78142	L	
	Conductivity floor water probe BWS 10-1					•			55112	H	
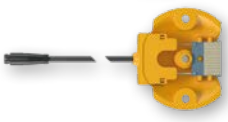	**Conductivity floor water probe BWS 10-2**	•		•					55116	L	
	Probe Minimelder Length: 10 m Connector: For FTM			•					78147	L	
	Probe Maximelder Length: 10 m Connector: For FTM			•					78148	L	
	Repeater Switchable level 1 and level 2 mode							•	75007	L	
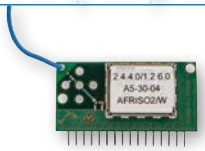	**Pluggable EnOcean® wireless module TCM 320** For WATCHDOG-LINE PCBs, can be ordered separately for EnOcean-ready products					•			78082	G	

5

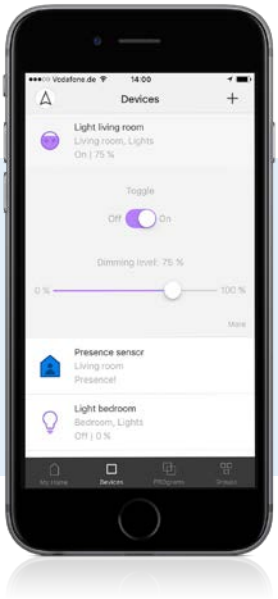

Mobile app AFRISOhome

- **Intuitive mobile app for AFRISOhome gateways**
- **Location-independent status checks and operation of the building automation system**
- **Operating systems: iOS and Android**
- **Web App**

Download on the App Store

ANDROID APP ON Google play

Available as Web App

A
Page 117

5

Application

User interface for mobile devices such as tablets or smartphones to control and visualise all AFRISOLab EnOcean® wireless building automation sensors and actuators. The AFRISOhome app allows for integration and interoperation of devices based on the wireless standards EnOcean®, Z-Wave, WLAN and Zigbee. This allows for almost limitless automation. Visit www.afrisohome.com/afrisolab for a detailed list of devices.

Description

All wireless devices, sensors and actuators integrated into a building automation system can be easily divided into groups by means of AFRISOhome gateways. Actuators in rooms, buildings, etc. can be defined as groups.
The access rights for the various groups can be configured separately for mobile devices. After selection of a group, the display of the mobile device shows the various wireless products. The user is provided with a clear overview of the current situation of the building automation system. Logic states, temperature values, information on the air quality and buttons for the actuators are displayed, among other things.

AFRISOhome gateway with the AFRISOhome app provide for countless combination possibilities in wireless building automation. AFRISO offers reliable, safe and innovative devices with EnOcean® wireless modules. It is also possible to integrate other products of the EnOcean® Alliance into your building automation system. The members of the EnOcean® Alliance provide more than 1,000 products such as window handles, switches, motion detectors and many types of other sensors and actuators. The combination possibilities are practically unlimited.

App structure

Teaching in devices

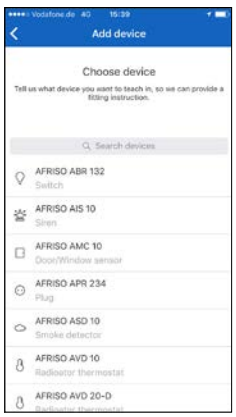

Function Groups

Function PROgrams

Demo-App

AFRISOhome gateway HG 01

- **Base module of your building management system**
- **Communication via WLAN or LAN**
- **Versatile combinations of products of the EnOcean® and Z-Wave Alliance**
- **Voice command via Alexa (Amazon Echo) or Google Assistant (Google Home)**

A Page 116

A Page 118

Application

For controlling and managing all EnOcean® and Z-Wave wireless sensors and actuators; extensions for ZigBee are available. Events, messages and measured values are documented and alarms are transmitted to mobile devices such as smartphones or tablets, if necessary. The power-saving AFRISOhome gateway HG 01 is ideal for continuous operation as a fully featured building management system based on EnOcean® wireless technology. Ideal for creating a smart home system in apartments, apartment buildings and administration buildings.

Description

The AFRISOhome gateway HG 01 was designed for the reliable operation of building management systems. All sensors and actuators of the EnOcean® and Z-Wave Alliance are immediately recognised by the gateway and can be easily integrated into the building management system via plug & play. LAN, WLAN and/or GSM interfaces are provided for Internet access and communication with routers and smartphones. It is also possible to operate the AFRISOhome gateway without Internet connection; in this case, an independent WLAN network is created. All user data and passwords are stored and processed locally on the AFRISOhome gateway. Optional on extension module for the wireless standard Zigbee is available, which provide an even wider selection of sensors and actors as well as application possibilities. The free AFRISOhome app (iOS and Android) allows for fast and easy operation of the gateway. Building management systems based on an AFRISOhome gateway excel with virtually unlimited customisability and extensibility.

Technical specifications

Operating temperature range
Ambient: 0/40 °C
Storage: -20/+60 °C

Supply voltage
AC 100–240 V
Frequency: 50–60 Hz
Power input: Max. 10 W

Housing
W x H x D: 205 x 146 x 37 mm

EnOcean® wireless
Frequency: 868.3 MHz
Transmission power: Max. 10 mW
Range: 10 to 30 m (depending on room arrangement and materials in the building)

i

See www.afrisohome.com for interoperable products (whitelist)

AFRISOhome gateway HG 01

1 Mains connection
2 Reset
3 USB 2.0
4 Mini USB 2.0
5 LAN RJ45
6 WLAN antenna

Smart Home with AFRISOhome Gateway

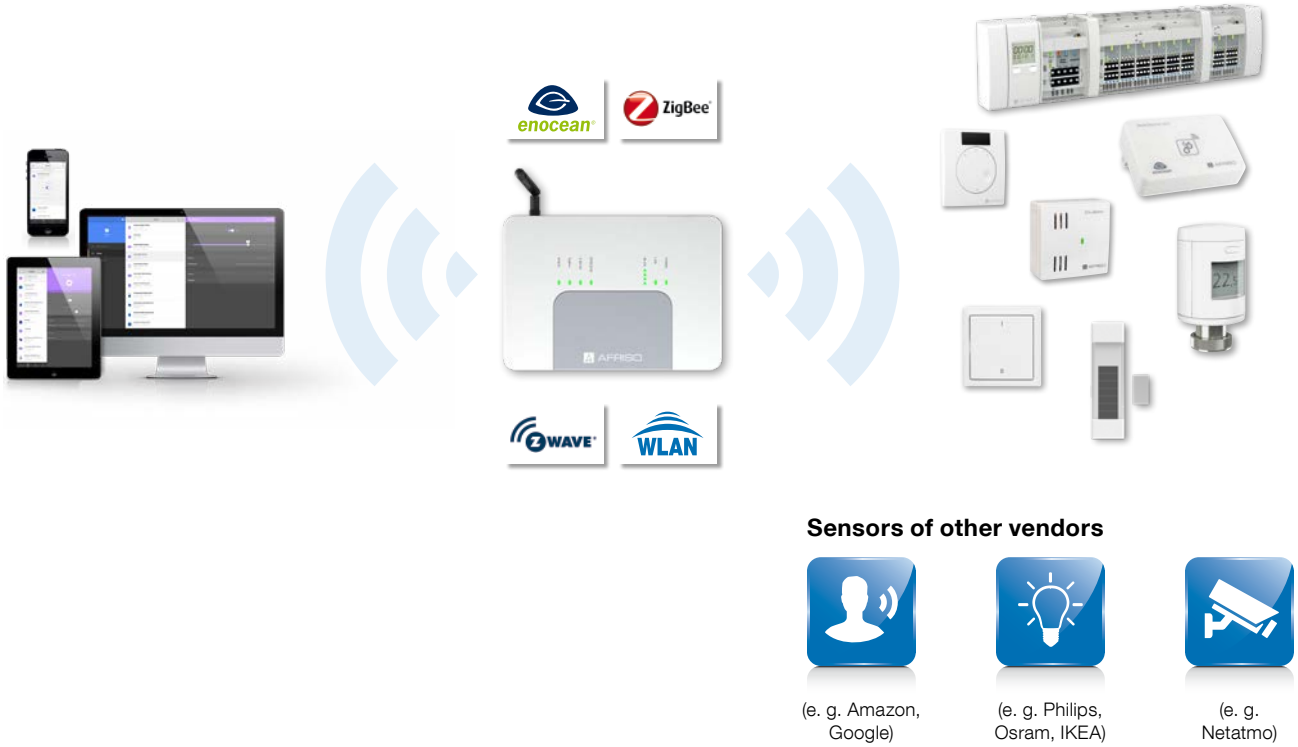

i See operating instructions for detailed information on the range of the EnOcean® wireless module.

DG: L, PG: 4	Part no.	**Price €**
AFRISOhome gateway HG 01 with WLAN, LAN and wireless modules EnOcean® and Z-Wave	**78109**	
Accessories		
Extension module Zigbee	**78996**	

Alarm units with EnOcean® wireless at a glance

With the proven WATCHDOG-LINE alarm units, AFRISO has been offering devices for reducing a vast array of risks in buildings and homes for many years. The WATCHDOG alarm units will now successively be EnOcean®-enabled so that an EnOcean® wireless module can be retrofitted. Whether or not an alarm unit already features this technology is indicated by the labels "EnOcean-ready" on the nameplate.

All devices of the WATCHDOG-LINE are compact units in wall mounting housings for professional and safe installation. Visual alarm and audible alarm that can be acknowledged ensure that the persons in a building are notified of the alarm condition. Residents with or without mobile devices can immediately take appropriate action. The AFRISOhome gateway in conjunction with additional AFRISO products with EnOcean® wireless technology allows the user to configure a whole range of fully customisable, extensible applications.

Typical application areas

- Collection facilities below oil and water consuming equipment
- Drip pans below storage tanks, burners or motors in buildings or outdoors
- Containers, barrels and tanks/ double-walled tanks
- Sewage tanks
- Cisterns and water storage tanks
- Oil depots, boiler rooms and rooms with mains water connection
- Heating systems
- Cable and pipe ducts
- Canal shafts, manholes and inspection ducts
- Pipes and hoses

EnOcean-ready
The label "EnOcean-ready" indicates that the PCB of the device features a slot for the EnOcean® wireless module. It is sufficient to plug in the TCM 320 wireless module to integrate the device into an EnOcean® wireless building automation system.

Pluggable EnOcean® wireless module TCM 320
Part no. 78082

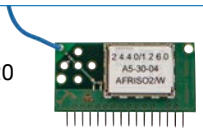

Alarm unit	Probe	EnOcean®	Media	Application
WWG water alarm unit	Wall mounting rail probe **WSS** or Floor water probe **BWS 10-1**	**EnOcean-ready**	■ Water ■ Conductive water mixtures ■ Electrically conductive liquids ■ Emulsions	**1 channel** Suitable for water, but also for electrically conductive liquids, emulsions and conductive water mixtures. i siehe Seite 75
Oil/water alarm unit ÖWU	Wall mounting rail combination probe	**EnOcean-ready**	■ Oil + water	**1 channel** ÖWU distinguishes oil alarms and water alarms and indicates the appropriate alarm condition. i See page 72

Alarm unit	Probe	EnOcean®	Media	Application
Oil/water alarm unit ÖWWG 3	PTC thermistor probe	**EnOcean-ready**	■ Electrically conductive and non-conductive liquids	**1 channel** ÖWWG 3 generates alarms in the event of accumulations of liquids caused by tank leaks, backflow, flooding, etc. **Approval for construction products:** DIBt: Z-65.40-339 i See page 69
Level switches Minimelder / Maximelder	Magnetic float switch.	**EnOcean-ready**	■ Water ■ Fuel oil EL, L, M ■ Oil/water mixtures ■ Neutral liquids	**1 channel** Suitable to signal minimum or maximum levels in tanks containing liquids. i See page 18
Digital tank contents indicator DTA 20 E	Pneumatic measuring line	**EnOcean-inside**	■ Fuel oil ■ Diesel fuel ■ Water ■ Non-corrosive media (density 0.5 to 1.5 g/cm3)	**1 channel** For manual level measurement and signalling of a minimum level during measurements – battery-operated. **DTA 20 E EnOcean®-inside** i See page 98
Leak detector Eurovac	High- or low-vacuum based	**EnOcean-ready**	■ Water-polluting liquids (flash point > 55 °C) ■ AdBlue® (urea solution 32.5 %)	For monitoring aboveground or underground double-walled tanks or single-walled tanks with inner lining. **Approval for construction products:** CE marking as per EC Construction Products Regulation 305/2011, EC 574/2014, EN 13160-1/-2 and ÜHP i See page 51
Leak detector Europress	Pressure type	**EnOcean-ready**	■ Water-polluting liquids ■ AdBlue® (urea solution 32.5 %)	For monitoring aboveground or underground double-walled tanks. **Approval for construction products:** CE marking as per EC Construction Products Regulation 305/2011, EC 574/2014, EN 13160-1/-2 and ÜHP i See page 60

* Use as leak detection system class III as per EN 13160-1/-4

Tank withdrawal systems

Automatic
Fuel oil de-aerators

Fuel oil filters

Anti-siphon valves

CHAPTER 6

Equipment for fuel oil storage tanks and oil carrying pipes

OVERVIEW

Equipment for double-walled underground tanks 124

WITHDRAWAL SYSTEMS

Tank withdrawal system Euroflex 128

Tank withdrawal system Euroflex TH with heating band, Miniflex 130

Pull cord, pressure compensation unit DAE 131

ANTI-SIPHON VALVES

Anti-siphon valves 132

Piston type anti-siphon KAV 133

Diaphragm type anti-siphon valve MAV 134

Tester for safety equipment against siphoning 135

FUEL OIL FILTERS

Comparison of fuel oil filters 136

Single-line and dual-line filters for fuel oil 137

Spare parts for filters 138

FUEL OIL DE-AERATORS

Overview automatic fuel oil de-aerators 139

Fuel oil de-aerator Flow-Control 3/K 140

Fuel oil de-aerator Flow-Control 3/K HT 141

Fuel oil de-aerator FloCo-Top-2 142

Fuel oil de-aerator FloCo-Top-1K 145

ACCESSORIES

GWG filler cap, filler cap K, overpressure device 126

Vent caps, dip stick pipe cap/filler caps 127

Screw connections, vacuum gauges, adapters, filter spanners, hand-held suction pumps 146

Equipment for double-walled underground tanks

Leak monitoring with vacuum

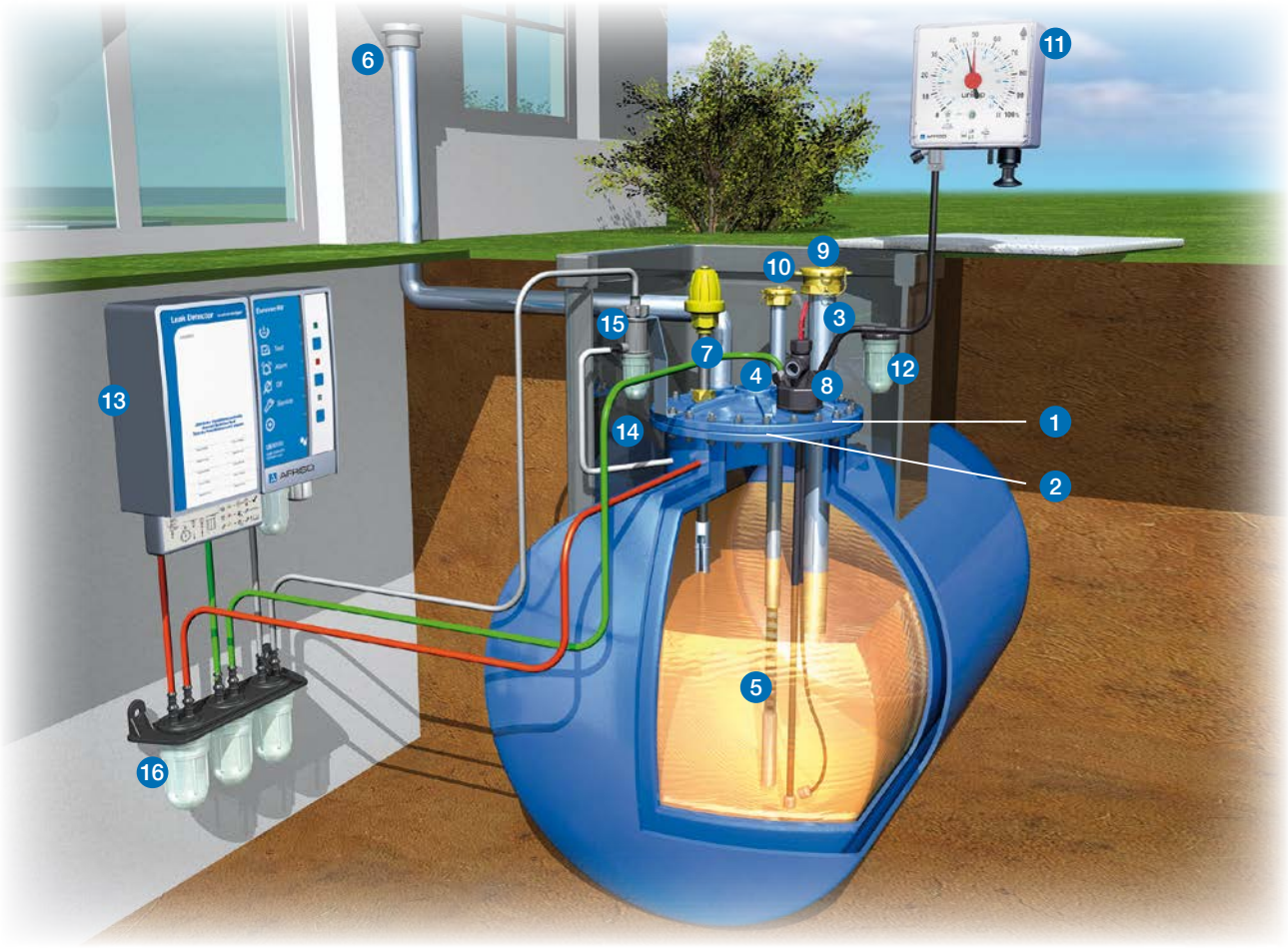

1. Manhole cover
2. Seal
3. Filling pipe with immersion pipe
4. Pipe for dipstick
5. Dipstick
6. Vent cap
7. Level sensor GWG 23
8. Combination fitting made of plastic, also acts as isolating piece
9. Filler cap
10. Cap for dipstick pipe
11. Level indicator Unitop
12. Condensate trap
13. Leak detector Eurovac
14. LAZ mounting kit
15. Liquid barrier
16. Condensate bar

Our product portfolio for the safe operation of fuel oil systems and fuel oil tanks reduces operating costs, helps make optimum use of fuels, provides timely warnings if hazardous situations arise and contributes to the protection of the environment. Irrespective of the tank size or the fuel to be stored.

Application areas
- Cylindrical steel or plastic (glass-fibre reinforced plastic) double-walled tanks
- Double-walled steel tanks
- Steel tanks welded on site
- Spherical tanks
- Tanks with inner lining
- Oil storage rooms/collection facilities
- Containers, cisterns, cesspits

Media
- Fuel oil EL
- Diesel fuel
- Biofuel with up to 100 % FAME
- Biodiesel with up to 100 % FAME
- AdBlue®
- AHL
- Rainwater
- Many other media

Equipment for double-walled underground tanks

Leak monitoring with leak detection fluid

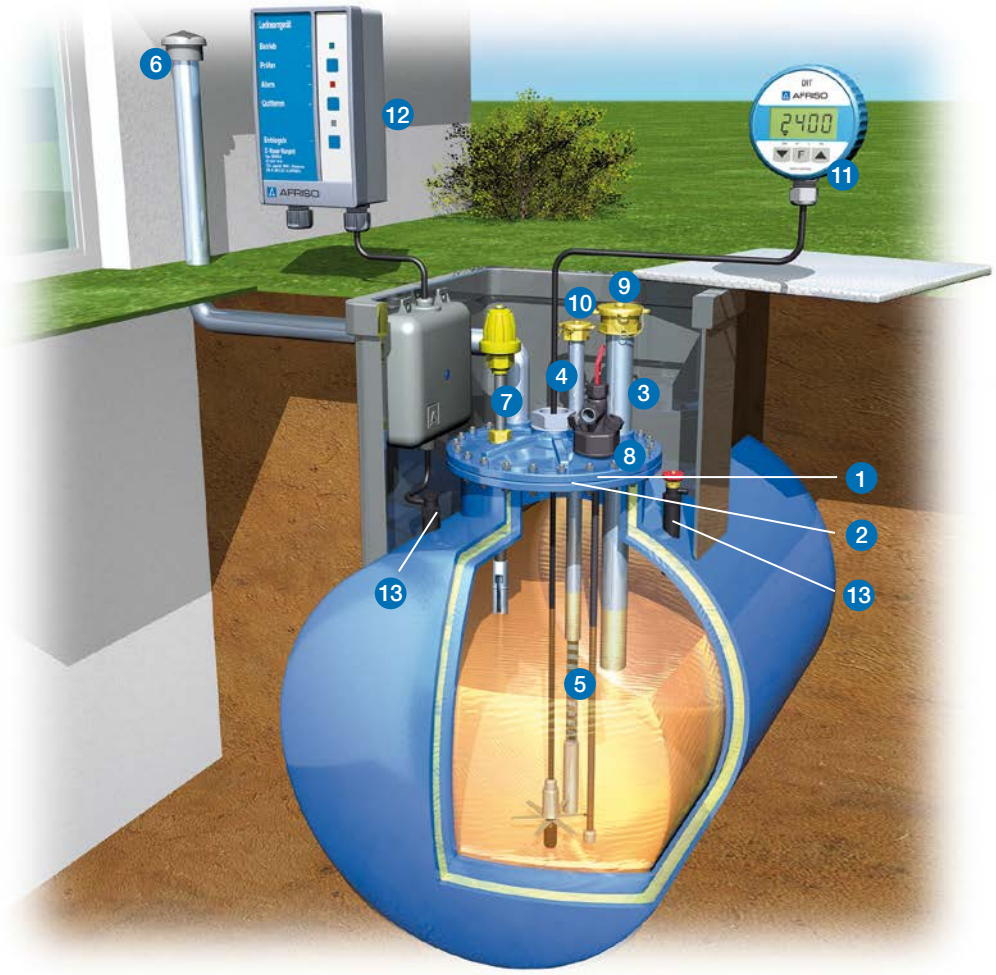

1. Manhole cover
2. Seal
3. Filling pipe with immersion pipe
4. Pipe for dipstick
5. Dipstick
6. Vent cap
7. Level sensor GWG 23
8. Combination fitting Euroflex 3 made of plastic, also acts as an isolating piece
9. Filler cap
10. Cap for dipstick pipe
11. Level indicator DIT
12. Leak detector
13. LAG mounting kit

Safety and protection of the oil storage system are the basis of our product development. Continuous adaptation to current standards and directives as well as intelligent products such as the piston type anti-siphon valve approved for use in manholes up to –25 °C ensure optimum safety concepts.

i

Since 2003, leak monitoring by means of systems with leak detection fluids is only permissible in the case of existing systems. New systems must be monitored with vacuum type or pressure type systems (such as Eurovac or Europress).

GWG filler caps, overpressure device

GWG filler cap

Application For facilities that may be operated with fuel oil EL standard and low-sulphur, diesel or biodiesel. Suitable for flood hazard areas.

Description GWG filler cap with bayonet connection G2 with integrated level sensor connection fitting. Brass male coupling as per EN 14420-6. Filler cap made of oil- and weather-resistant plastic. Watertight up to 10 m water column. Lockable with standard padlock.

Scope of delivery includes green label "Fuel oil EL low-sulphur" and red label "Also for fuel oil EL standard".

GWG filler cap

Filler cap K

Application For facilities that may be operated with fuel oil EL standard and low-sulphur, diesel or biodiesel.

Description Filler cap with bayonet connection G2. Brass male coupling as per EN 14420-6. Filler cap made of oil- and weather-resistant plastic. Lockable with standard padlock.

Scope of delivery includes green label "Fuel oil EL low-sulphur" and red label "Also for fuel oil EL standard".

Filler cap K

Overpressure device

Application To avoid overpressure of storage tanks during filling. Suitable for flood hazard areas

Description Overpressure device with male connection thread G1½. Opening pressure approx. 25 mbar.
Two or more overpressure devices must be installed for filling rates of more than 300 l/min. Watertight up to 10 m water column.

i GWG filler caps are also used in building renovation projects since the existing GWG wall fitting can no longer be fixed to the outside insulation.

DG: G	PG			Part no.	**Price €**
GWG filler cap	2	1	10	**20430**	
Overpressure device	1	1	25	**20466**	
Filler cap K	2	1	10	**20440**	

Vent caps, dip stick pipe caps/filler caps

Vent caps

Application To cover the vent line.

Description Cap for vent line.

Metal version: Zamak alloy, thread G1½ or G2.
Plastic version: Plug-in type with fixing by means of screw or G2 male thread

Dip stick pipe caps/filler caps

To close dip stick pipes and filling pipes. Suitable for flood hazard areas.

Dip stick pipe cap/filler cap made of Zamak alloy. Watertight up to 10 m water column.

Lockable with standard padlock.

DG: G	PG			Part no.	Price €
Vent cap 2", plastic – plug-in version	1	1	25	**20460**	
Vent cap 1½" plastic – plug-in version	1	1	25	**20450**	
Vent cap G2, plastic – male thread	1	-	200	20462	
Vent cap G2 metal	3	1	25	**20463**	
Vent cap G1½ metal	3	1	25	**20455**	
Cap for pipe for dipstick G1 x G1¼	2	1	140	**20464**	
Filler cap G2 x G2½ Fuel oil EL standard	3	1	55	**20445**	
Filler cap — green G2 x G2½ Low-sulphur fuel oil EL	3	1	25	**20452**	

i See page 6 for pipes for dipsticks.

Tank withdrawal system Euroflex

Suitable for use in flood hazard areas. Watertight up to 10 m water column.

Quick-action shut-off valve with lever for fast shutting off of the oil supply. Remote operation from outside of the tank room possible with pull cord.

Version Euroflex 3 with direct connection for pneumatic tank contents gauges. Ideal for retrofitting or for applications involving tanks with few connections.

Floating withdrawal as per DIN 4755 recommendation. Makes it possible to withdraw fuel oil in the clean area and thus supports optimum functionality of the downstream fittings (e.g. oil filters).

Version with special G1 screw connection to avoid twisting. Ideal for use with Euroflex with heating band for fast, simple mounting.

Fitting made of high-impact, weather-resistant plastic. Approved as an isolating piece.

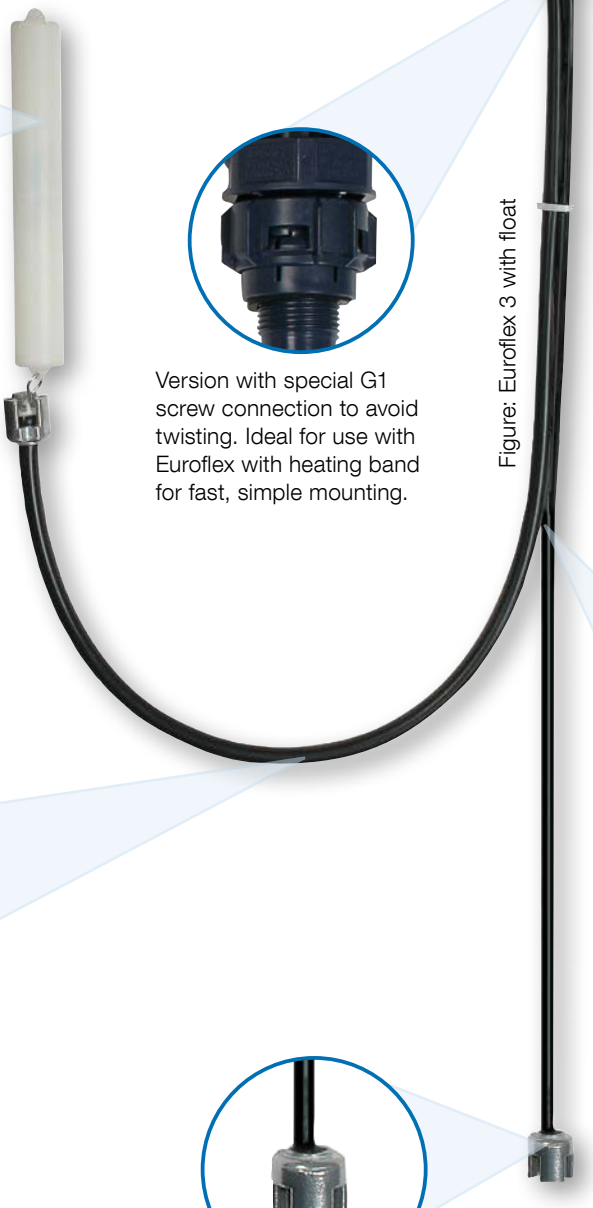

Figure: Euroflex 3 with float

Flexible suction line for maximum variability – also in terms of hose length. The standard lengths 2.15 m and 3.15 m can be shortened as required without any problems.

All materials resistant to biofuel and biodiesel with max. 20 % FAME (fatty acid methyl ester).

Measuring line with balance chamber (for Euroflex 3)

Tank withdrawal system Euroflex

- **Combination fitting made of high-impact plastic**
- **Integrated, TÜV-tested isolating piece**
- **Silent check valve**
- **Euroflex 3 for floating withdrawal, also for self-securing withdrawal**
- **Suitable for use in flood hazard areas**

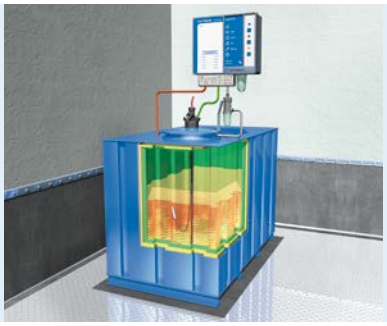

Application

For withdrawal of fuel oil from underground and aboveground tanks in single-line or dual-line mode. Suitable for the following media: fuel oil EL (DIN 51603-1) and diesel fuel (EN 590) as well as biofuel and biodiesel with max. 20 % FAME. Also for use in flood hazard areas. No floating withdrawal in the case of underground tanks.

Description

Combination fitting made of plastic as a withdrawal system with measuring line (not Euroflex 2) and TÜV-tested isolating piece that screws into the tank. G⅜ stainless steel threaded female connections for suction and return lines. Universal compression fittings for pipes with 8 and 10 mm outside diameters for connecting the suction line are enclosed. The integrated check valve with elastic valve seat keeps the oil column in the suction line from being interrupted when the burner is off. Quick-action shut-off valve with lever for remote closing in emergency situations. Pressure- and vacuum-tight up to 1 bar. Also available without check valve for self securing withdrawal.

Euroflex 3 with float and special G1 screw connection for withdrawing oil in the clean area (as per TRWS 791 not recommended in underground tanks). Measuring line connection for hose or pipe with 6 mm outside diameter. Suction hose length 2.15 m or 3.15 m with additional float at the suction hose end.

Euroflex 312 (GWG 12K/1C), combination of level sensor and withdrawal system. With measuring line connection for hose or pipe with 6 mm outside diameter. For battery tanks as per DIN 6620 and tanks as per DIN 6625 manufactured on site. Specially useful if there is no connection socket at the tank. Connection G1½.

Technical specifications

Connection
Tank: G1 male thread
(Euroflex 312: G1½ male thread)
Suction/return line: G⅜ female thread
Measuring line: 6 mm

Length
Suction hose: 2.15 m or 3.15 m
Measuring hose: 2.15 m or 3.15 m (not Euroflex 2)

Test pressure
Max. 6 bar

Flow rate
Max. 150 l/h

Material
Screw fitting: Plastic (POM), blue
Suction hose: NBR/PVC
Balance chamber: Zamak (ZnAl4Cu1)

Approval for construction products
Conformity certificate as per EN 12514-2, ÜHP
Euroflex 312: CE marking as per EC Construction Products Regulation 305/2011, EC 574/2014, EN 13616:2004

DG: G, PG: 1			Part no.	**Price €**
Euroflex 2 (2.15), suction hose 2.15 m, without measuring line connection	1	25	**20162**	
Euroflex 3 (2.15), suction hose 2.15 m	1	25	**20160**	
Euroflex 3 (3.15), suction hose 3.15 m	1	25	**20164**	
Euroflex 3 with float, suction hose 2.15 m	1	25	**20130**	
Euroflex 3 with float, suction hose 3.15 m	1	20	**20131**	
Euroflex 3 (3.15) without check valve, suction hose 3.15 m for self-securing suction line	1	25	**20129**	
Euroflex 312 (GWG 12 K/1C), suction hose 2.15 m	1	10	**20190**	
Conversion kit float kit G1 for Euroflex and Miniflex	1	25	**20125**	
Conversion kit float kit G1½ for single tanks and communicating withdrawal systems	1	-	**20120**	
Conversion kit shut-off valve for Euroflex (10/98 and later), Miniflex and communicating AFRISO withdrawal systems for battery tanks for conversion to automatically safeguarding suction lines	1	-	**74305**	

i Pull cord for remote closing see page 131.

Euroflex with heating band, Miniflex

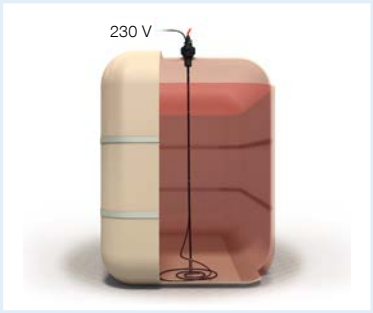

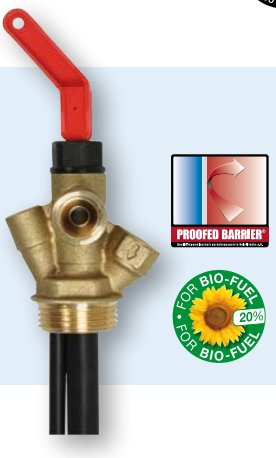

Euroflex TH

Application

For withdrawal of fuel oil EL or diesel fuel in single-line mode from tanks that may be subjected to temperatures of less than 5 °C (cloud point, paraffin). Suitable for flood hazard areas.

Description

Combination fitting Euroflex 2 as a withdrawal system with heating band that screws into the tank. A heating band is attached to the suction line; at the bottom of the tank the band forms a spiral around the suction point. The required length depends on the tank type and size as well as the installation site. The self-controlling heating band is designed to avoid overheating and burning out. The band is connected to AC 230 V via a connection cable (2 m) and a residual current device. Adaptation to the tanks with special screw connection to avoid twisting. Watertight up to 10 m water column.

Technical specifications

Connection
Tank: G1 male thread
Suction line: G⅜ female thread

Length
Heating band: 5 m, or 7.5 m
Suction hose: 2.15 m

Heating capacity
At 10 °C: 25 W/m

Miniflex

Application

For withdrawal of fuel oil from underground and aboveground tanks in single-line or dual-line mode. Suitable for the following media: fuel oil EL (DIN 51603-1) and diesel fuel (EN 590) as well as biofuel and biodiesel with max. 20 % FAME. Also for use in flood hazard areas.

Description

Combination fitting made of brass as a withdrawal system with measuring line that screws into the tank. Threaded female connection for suction and return lines. Universal compression fittings for pipes with 8 and 10 mm outside diameters for the suction line are enclosed. Measuring line connection for hose or pipe with 6 mm outside diameter. The integrated check valve with elastic valve seat keeps the oil column in the suction line from being interrupted when the burner is off. Quick-action shut-off valve with lever for remote closing in emergency situations. Pressure- and vacuum-tight up to 1 bar.

Technical specifications

Connection
Tank: G1 male thread
Suction/return line: G⅜ female thread
Measuring line: 6 mm

Length
Suction hose: 2.15 m or 3.15 m
Measuring hose: 2.15 m or 3.15 m (not Miniflex 2)

Test pressure
Max. 6 bar

Flow rate
Max. 150 l/h

Material
Screw fitting: brass
Suction hose: NBR/PVC
Balance chamber: Zamak (ZnAl4Cu1)

DG: G	PG			Part no.	Price €
Euroflex TH, suction hose 2.15 m, 5 m heating band	1	1	-	21010	
Euroflex TH, suction hose 2.15 m, 7.5 m heating band	1	1	-	21011	
Miniflex 2, suction hose 2.15 m, without measuring line connection	2	1	25	74200	
Miniflex 3, suction hose 2.15 m	2	1	25	74300	
Miniflex 3, suction hose 3.15 m	2	1	25	74310	

i See Euroflex ordering table for conversion kit for Miniflex

Pull cord, pressure compensation unit

Pull cord

Description

Pull cord with handle and a sealable case for the remote activation of quick-action shut-off valves (e.g. Euroflex or Miniflex). TÜV-tested. Consisting of:

- Pull cord (steel, plastic-coated), 10 m long
- Handle
- 4 eyelet screws for deflecting the pull cord
- Sealable case with wire and lead seal
- Dowels and screws

Pull cord

Pressure compensation unit DAE

Application

Used to limit pressure increases in closed pipe sections resulting from expansion caused by temperature changes. Suitable for fuel oil pipe sections which are closed at both ends (e.g. by means of solenoid valves or check valves) and which are subject to considerable temperature differences (e.g. due to pipe heating). Suitable for use in flood hazard areas.

Description

G⅜ female thread connections at both ends. A pipe volume of 725 cm^3 can be buffered at a temperature difference of 40 °C. This corresponds to the following max. line lengths (depending on the line diameter):

- 25.5 m ≥ Ø 8 x 1
- 14 m ≥ Ø 10 x 1
- 9 m ≥ Ø 12 x 1

Watertight up to 10 m water column.

Approval for construction products
Conformity certificate (ÜHP)
As per EN 12514-2

Pressure compensation unit DAE

6

DG: G	PG	Part no.	**Price €**
Pressure compensation unit DAE	2	**20800**	
Pull cord	1	**20475**	

Protection equipment against siphoning: anti-siphon valves

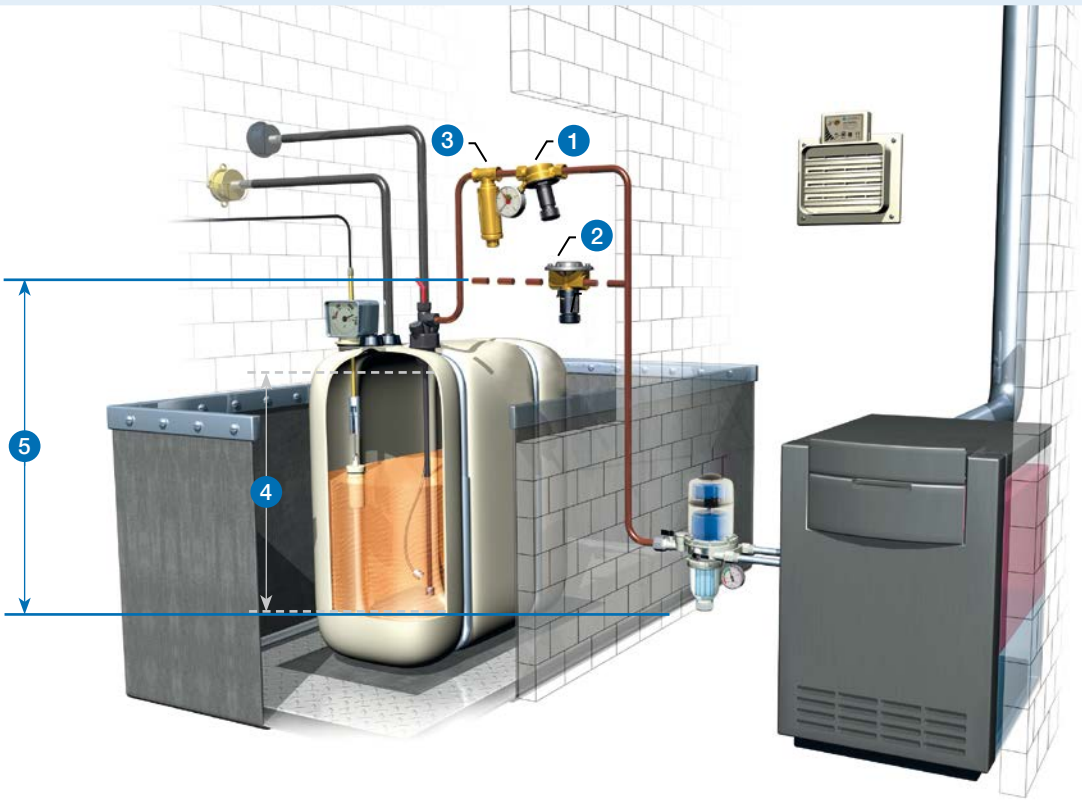

1. Piston type anti-siphon valve KAV*
2. Diaphragm type anti-siphon valve MAV*
3. Pressure compensation unit DAE
4. For KAV: Set actual safe height
5. For MAV: Set max. height difference between MAV and the lowest line point at the system

* Mounting position (example), arrangement is variable and must be adapted to suit local conditions.

Legal and technical requirements concerning fuel oil consuming systems

Legislation for water pollution control (German Water Act WHG) stipulates that any adverse modification of the characteristics of water must be avoided. For example, § 62 and § 63 of the German Water Act specify the handling of water-polluting substances in facilities.
The regulations may be national and/or local.

In the case of oil consuming systems operating in suction mode where a pipe section is below the maximum tank level, fuel oil can be siphoned out if a leak occurs. Therefore, protection equipment against siphoning must be installed. Anti-siphon valves are used for this purpose; they are available as solenoid, diaphragm or piston type anti-siphon valves. Diaphragm or piston type anti-siphon valve are usually installed in smaller and medium sized facilities; the piston type anti-siphon valve offers a number of decisive advantages.

Depending on the applicable regulations, the valves must be approved.

Notes on installation

It must be ensured that the vacuum at the suction end at the oil burner pump does not exceed 0.4 bar.

Factors to be considered include:
- The maximum suction lift at minimum oil level
- The suction line length
- The viscosity of the oil in the storage tank at extreme winter temperatures
- Additional pressure losses caused by fittings (such as oil filters, shut-off valves, etc.) and lines

Piston type anti-siphon valve KAV

- **Piston instead of diaphragm – for maximum safety even in case of pollution, ice or system overpressure**
- **Adjusted value corresponds to the safe height (reduced line resistance)**
- **Also for outdoor use (manhole)**
- **Sealed system for error-free operation**
- **Pressure relief mechanism in both directions**

Page 135

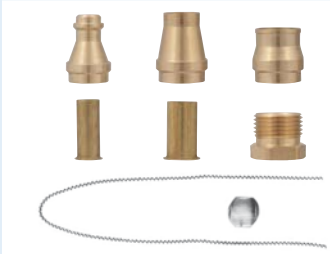

With universal screw connections 6/8/10 mm and lead sealing kit

Application

For oil carrying suction pipes in oil consuming systems where a pipe section is below the maximum tank level. KAV keeps fuel oil from being siphoned out of the tank in the case of leaks in the suction line. Suitable for the following media: fuel oil (DIN 51603-1) and diesel fuel (EN 590) as well as biofuel and biodiesel with up to 100 % FAME. Also for use in flood hazard areas.

Description

Vacuum-controlled shut-off system with a completely new function principle. KAV is closed when the burner pump is not in operation. When the burner pump starts, a vacuum is generated in the suction line. This opens the KAV and fuel oil is pumped from the tank. If the suction line has a leak or if the burner pump stops, KAV closes and the suction line between the tank and the burner pump is shut off. KAV features a pressure relief mechanism, i.e. if the fuel oil contained in the suction line heats up and therefore expands, KAV opens. The fuel oil can flow back into the tank (provided that a tank withdrawal fitting without backflow preventer is installed). The pressure relief is independent of the adjusted safe height and operates reliably at a response pressure as low as 300 mbar. KAV is continuously adjustable from 1–4 m. The adjusted value corresponds to the actual safe height and not the installation height (as, for example, in the case of diaphragm type anti-siphon valves).This results in reduced line resistance, which has a positive effect on the service life of the burner and the pump. KAV is designed as a sealed system. Therefore, no vent is required and water or dirt cannot get into the system. Since the sensitive diaphragm as the main actuating element has been replaced by a piston, malfunctions caused by pollution, ice or system overpressure (rupture of the diaphragm) are practically impossible. Watertight up to 10 m water column.

Technical specifications

Adjustment of safe height
Corresponds to actual safe height 1–4 m, continuously adjustable

Connection thread
$^3/_8$ female thread at both ends

Mounting position
Any

Oil flow rate
Max. 220 l/h

Operating temperature range
Medium/ambient: -25/+40 °C

Vacuum-tight
Up to -1 bar

Test pressure
Max. 10 bar

Response pressure
300 mbar

Housing material
Brass

Approval for construction products,
DIBt: Z-65.50-415

Scope of delivery
Piston type anti-siphon valve with screw connector kit for pipes Ø 6, 8 and 10 mm and lead sealing kit

DG: G, PG: 2			Part no.	**Price €**
Piston type anti-siphon valve KAV	1	20	**20240**	
Pressure gauge (-0.7/+0.9 bar) for indicating the KAV opening pressure	1	10	**70030**	

Diaphragm type anti-siphon valve MAV

- **Safe height 1–4 m**
- **With shutoff and vent function**

A
Page 135

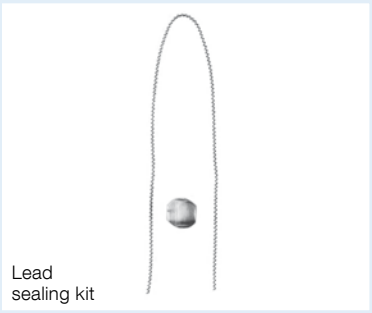
Lead sealing kit

6

Application

For oil carrying suction pipes in oil consuming systems where a pipe section is below the maximum tank level. MAV keeps fuel oil from being siphoned out of the tank in the case of leaks. Suitable for the following media: fuel oil (DIN 51603-1) and diesel fuel (EN 590) as well as biofuel and biodiesel with max. 20 % FAME. Also for use in flood hazard areas.

Description

MAV is continuously adjustable to a safe height of 1–4 m for optimum adaptation to suit local conditions. The adjusted value corresponds to difference between the installation height and the lowest point of the oil line. MAV shuts off under spring pressure and opens under the vacuum caused by the pump. Watertight up to 10 m water column. If necessary, install a pressure compensation unit.

Technical specifications

Adjustment of safe height
1–4 m (corresponds to installation height), continuously adjustable

Connection thread
3/8 female thread at both ends

Mounting position
Any

Oil flow rate
Max. 220 l/h

Operating temperature range
Medium/ambient: -25/+40 °C

Vacuum-tight
Up to -1 bar

Test pressure
Max. 6 bar

Housing material
Brass

Approval for construction products
DIBt: Z-65.50-415

Scope of delivery
Diaphragm type anti-siphon valve with lead sealing kit

DG: G	PG			Part no.	Price €
Diaphragm type anti-siphon valve MAV	2	1	-	20139	
Screw connections with Cu flat gasket G⅜ x 6 (dual)	3	1	-	20507	
Screw connections with Cu flat gasket G⅜ x 8 (dual)	3	1	-	20504	
Screw connections with Cu flat gasket G⅜ x 10 (dual)	3	1	-	20505	
Screw connections with Cu flat gasket G⅜ x 12 (dual)	3	1	-	20506	

Tester for safety equipment against siphoning

- **Reliable tests of all diaphragm type/piston type anti-siphon valves**
- **Simple check and assessment of the system safety**
- **Test can be performed easily at all systems with standard filter combinations**

Application

Tester for function tests of built-in mechanical "safety equipment against siphoning" (diaphragm type or piston type anti-siphon valves) in oil carrying pipes or withdrawal systems. Test can be performed at all systems with standard filter combinations. If no AFRISO filter cup with test and drain system is available, it is sufficient to replace the existing filter cup with the filter cup of the tester. AFRISO recommends to replace all filter cups without drain system so that the fuel oil filter can be drained rapidly and the function test performed easily during servicing. Suitable for tests with the following media: fuel oil EL (DIN 51603-1) and diesel fuel (EN 590) as well as biofuel and biodiesel with up to 100 % FAME.

Description

The tester for "safety equipment against siphoning" allows to quickly come to a sound conclusion concerning the correct operation of anti-siphon valves. Mounting is simple: Screw the filter cup of the tester into the fuel oil filter of the facility (not necessary in the case of oil filter cups with test and drain system), plug the hose into the tester drain unit, connect an oil suction pump to the other end of the tester and you are ready for testing. For the test, a vacuum is generated which sucks in oil; the oil flows into the tester cup. The vacuum is maintained in the tester cup via the shut-off fitting and displayed by the pressure gauge. When no more oil flows into the tester cup, there is pressure equilibrium. The vacuum can now be read at the test pressure gauge and you can determine whether the siphoning protection works.

Technical specifications

Dimensions (W x H x D)
Tester: 180 x 286 x 71 mm
Case: 395 x 106 x 295 mm

Range
-0.6/0 bar

Connection
G$^{3}/_{8}$ with 60° cone

Operating temperature range
Ambient: -25/+40 °C
Storage: -25/+60 °C

Scope of delivery
- Tester with long filter cup
- Vacuum gauge
- Hose
- Long tester cup with drain system
- Plastic case

i

Safety equipment against siphoning must be checked for correct operation at least every 5 years according to the approval.

See www.afriso.com > INFOTHEK > downloads for test reports.

DG: G, PG: 1			Part no.	**Price €**
Tester anti-siphon valve	1	-	**20239**	
Accessories				
Filter cup short with drain system	1	-	**20257**	
Filter cup long with drain system	1	-	**20262**	

Comparison of fuel oil filters

Paper filters

- Optimum ultra-fine filtration
- Specially for small and very small burner capacities
- Preferably for single-line mode

Opticlean MS-5/MC-7 ultra-fine filter
Optimum filter surface due to folded paper filter.

Mesh size
- 20–35 µm (MS-5)
- 5–20 µm (MC-7)

Filter surface: 500 cm² (MS-5)
700 cm² (MC-7)

Opticlean MC-18 ultra-fine filter
Optimum filter effectiveness and long service life.

Mesh size: 5–20 µm
Filter surface: 1,850 cm²

Can be used with long filter cup.

Replaceable filter cartridge
Excellent filtration. Also suitable for pressure mode and temperatures of up to 80 °C.

Mesh size: 12–30 µm
Filter surface: 967 cm²

Can be used for all AFRISO filter types with additional adapter.

6

Sintered plastic sieves

- Excellent filtration
- For small and medium burner capacities
- Suitable for single- and dual-line mode
- Suitable for almost all standard filter combinations.

Sintered plastic sieve, short
Star shape for large filter surface.

Colour code: Blue
Mesh size: 50–70 µm
Filter surface: 115 cm²

Optimum replacement characteristics: Filter base does not swell

Sintered plastic sieve Optimum
Excellent filtration and long service life.

Colour code: Blue
Mesh size: 50–70 µm
Filter surface: 200 cm²

Can be used with long filter cup, preferably for single-line mode.

Filter cup Optimum
Extra long filter cup provides for sedimentation volume and space for all standard, long filter inserts.

Version with drain system
- Removing the oil from the oil filter quickly
- No oil odour caused by oil dripping

Felt and Stainless steel sieve

- Proven filtration technology

Felt sieve with internal tubular sieve
For medium and high burner capacities. Suitable for single- and dual-line mode.

Mesh size: 50–75 µm
Filter surface: 15.3 cm² below the felt rings

Disadvantage: Filter fibres may come loose and get into the burner nozzles.

Stainless steel sieve
Good filtration, pollution visible. For medium and high burner capacities. Suitable for single- and dual-line mode.

Mesh size: 100 µm
Filter surface: 48 cm²

Single-line/dual-line filters for fuel oil

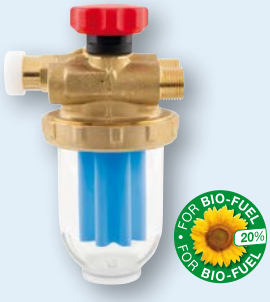

	Dual-line filter Z 500 Si//St/Fi	Single-line filter R 500 Si/St/Fi	Single-line filter V 500 Si/St
Application	For dual-line systems. Suitable for fuel oil EL (DIN 51603-1) and diesel fuel (EN 590).	For single-line systems with return supply. Suitable for the following media: fuel oil EL (DIN 51603-1), diesel fuel (EN 590), biofuel and biodiesel with max. 20 % FAME.	For single-line systems. Suitable for the following media: fuel oil EL (DIN 51603-1), diesel fuel (EN 590), biofuel and biodiesel with max. 20 % FAME.
Description	Brass filter housing, filter cup made of transparent, impact-resistant plastic. With check valve in the return line and shut-off valve in the flow line. Universal compression fittings for pipes with 8/10 mm outside diameters included. Watertight up to 10 m water column.	Brass filter housing, filter cup made of transparent, impact-resistant plastic. With shut-off valve in the flow line, vent valve with hose connector in the return line. Universal compression fittings for pipes with 8/10 mm outside diameters included.	Brass filter housing, filter cup made of transparent, impact-resistant plastic. With shut-off valve. Universal compression fittings for pipes with 8/10 mm outside diameters included. Watertight up to 10 m water column.
Approval for construction products	Conformity certificate (ÜHP) as per EN 12514-2.	Conformity certificate (ÜHP) as per EN 12514-2.	Conformity certificate (ÜHP) as per EN 12514-2.

DG: G, PG: 2	Connection		Universal screw connection	Filters	*Oil throughput Δp=100 mbar			Part no.	**Price €**
	Tank	Burner							
Dual-line filter Z 500 Si	2 x G⅜ female	2 x G⅜ male	2 x 8/10 mm	Sintered plastic	200 l/h	1	25	**20429**	
Dual-line filter Z 500 Fi	2 x G⅜ female	2 x G⅜ male	2 x 8/10 mm	Felt	200 l/h	1	25	**20428**	
Dual-line filter Z 500 St	2 x G⅜ female	2 x G⅜ male	2 x 8/10 mm	Steel	220 l/h	1	25	**20425**	
Single-line filter R 500 Si (return)	1 x G⅜ female	2 x G⅜ male	1 x 8/10 mm	Sintered plastic	210 l/h	1	20	**20281**	
Single-line filter R 500 Fi (return)	1 x G⅜ female	2 x G⅜ male	1 x 8/10 mm	Felt	240 l/h	1	20	**20282**	
Single-line filter R 500 St (return)	1 x G⅜ female	2 x G⅜ male	1 x 8/10 mm	Steel	250 l/h	1	20	**20283**	
Single-line filter V 500 Si	1 x G⅜ female	1 x G⅜ male	1 x 8/10 mm	Sintered plastic	250 l/h	1	25	**20292**	
Single-line filter V 500 St	1 x G⅜ female	1 x G⅜ male	1 x 8/10 mm	Steel	320 l/h	1	25	**20294**	
Dual-line filter Z ½-500 Si	2 x G½ female	2 x G½ female	---	Sintered plastic	310 l/h	1	25	20480	
Dual-line filter Z ½-500 St	2 x G½ female	2 x G½ female	---	Steel	500 l/h	1	25	20482	
Single-line filter V ½-500 Si	1 x G½ female	1 x G½ female	---	Sintered plastic	390 l/h	1	25	20485	
Single-line filter V ½-500 St	1 x G½ female	1 x G½ female	---	Steel	560 l/h	1	25	20487	

* At filter insert pollution degree of 50 %.

Spare parts for filters

DG: G	Description		PG			Part no.	Price €
	Opticlean MC-7 * Ultra-fine filter 5–20 µm, short, filter surface: 700 cm²		1	1	240	**20319**	
	Opticlean MC-18 * Ultra-fine filter 5–20 µm, long, filter surface: 1,850 cm²		1	1	120	**20318**	
	Opticlean MS-5 * Ultra-fine filter 20–35 µm, short, filter surface: 500 cm²		1	-	25	**20308**	
	Replaceable filter cartridge Mesh size: 12–30 µm, filter surface: 967 cm²		3	1	-	**70010**	
	Adapter replaceable filter cartridge to AFRISO filter		1	1	-	**70020**	
	Sintered plastic sieve short, 50–70 µm blue Filter base ABS white, engraving "Made in Germany" Box of 25 pieces		1	-	25	**20038**	
	Sintered plastic sieve short, 50–70 µm blue Filter base ABS white, engraving "Made in Germany" Box of 100 pieces		1	-	100	**20045**	
	Sintered plastic sieve Optimum, 50–70 µm blue Filter base ABS white, engraving "Made in Germany"		1	1	-	**20053**	
	Felt sieve Individually packed in re-sealable bag, in box of 25 pieces		1	-	25	**20034**	
	Stainless steel sieve 100 µm Box of 250 pieces		1	1	250	**20032**	
	Filter cup short Plastic, for suction mode	Standard	1	1	10	**20254**	
		With drain system and transparent drain hose Ø 6 x 500 mm	1	1	-	**20257**	
	Filter cup Optimum Plastic, for suction mode	Standard	1	1	10	**20258**	
		With drain system and transparent drain hose Ø 6 x 500 mm	1	1	-	**20262**	
	Filter cup, brass for pressure mode, without union nut		1	1	-	**20261**	
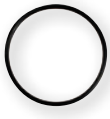	**O ring** For filter cup		1	-	10	**20422**	
	Service box Optimum in cardboard box, 4 x o rings (part no. 20422) and part no. 20053, 20258		1	1	-	**20260**	

6

i

* The filter surface of **Opticlean ultra-fine filters** is up to 37 times greater than that of conventional filter inserts; they excel with an extremely high degree of filtration. Filter fineness of nominal 5 µm (absolute 20 µm) separation are possible. Even the smallest drops of water and emulsion are retained with high reliability. Opticlean filter cartridges can be used in any standard fuel oil filter, they are metal-free and can be recycled in an environmentally protective way.

Automatic fuel oil de-aerator comparison

	Automatic fuel oil de-aerators		Automatic fuel oil de-aerators with filter		
Version	Flow-Control 3/K	Flow-Control 3/K HT	FloCo-Top-1K	FloCo-Top-2 KM Si	FloCo-Top-2 Optimum MC-18
Catalogue page	See page 140.	See page 141.	See page 145.	See page 142.	See page 144.
Application area	Single-line systems with return line				
Media	▪ Fuel oil EL ▪ Diesel fuel ▪ Biofuel or bio-diesel with up to 20 % FAME	▪ Fuel oil EL ▪ Diesel fuel ▪ Biofuel or bio-diesel with up to 100 % FAME ▪ Vegetable oils (colza oil)	▪ Fuel oil EL ▪ Diesel fuel ▪ Biofuel or bio-diesel with up to 20 % FAME	▪ Fuel oil EL ▪ Diesel fuel ▪ Biofuel or biodiesel with up to 20 % FAME	
Function	Continuous de-aeration		Continuous de-aeration and oil filtration	Continuous de-aeration and multiple oil filtration	
Filters	-	-	Sintered plastic filter	Sintered plastic filter	Opticlean ultra-fine filters
Vacuum gauge	-	-	-	-0.7/+0.9 bar	
Approval for construction products	Conformity certificate (ÜHP) as per EN 12514-2				

6

i

Nomograph for determining the internal pipe diameter (NW) of the fuel oil suction line in order to keep gas from accumulating in higher pipe sections and sections with downward gradients, or gas formation resulting from excessively high flow speeds.

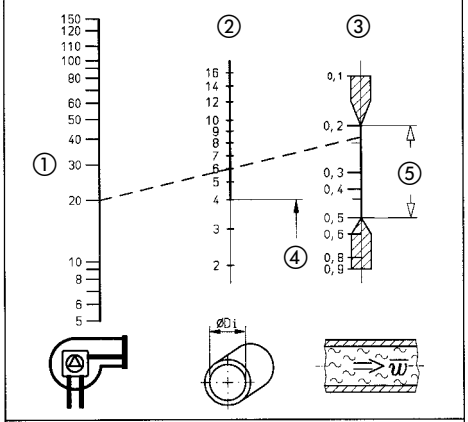

Example: A pipe with Ø 8 x 1 mm (NW 6) is required for a volume of 20 l/h and an average flow rate of approx. 0.23 m/s.

Our tip

Only installation by expert companies certified according to the applicable regulations ensures optimum operation of the automatic de-aerators. For optimum combustion, longer nozzle and filter service life and reliable function, the expert determines the following prior to installation and compares the values with the nomograph:

- Oil throughput per hour at burner nozzle
- Inside diameter of the (installed) oil suction line
- Vacuum (overpressure) in the oil carrying pipe upstream of the burner

The oil suction line is often too large. The flow rates of 0.2/0.5 m/s, required according to DIN 4755-2, are often not reached in systems converted from dual-line to single-line mode. The nomograph shows the proper values for sizing the suction line.

① Nozzle consumption l/h
② Inside diameter of the suction line in mm
③ Flow rate of the fuel oil in m/s
④ < Ø 4 not advisable
⑤ Recommended range as per DIN 4755-T2

Automatic fuel oil de-aerator Flow-Control 3/K TÜV-tested

- **Trouble-free operation due to automatic de-aeration**
- **Dual float safety system keeps oil foam from escaping**
- **Considerably increased fuel oil filter service life – the amount of oil drawn from the tank corresponds exactly to the oil actually burnt**
- **The suction line can usually have a smaller cross section**

"PROOFED BARRIER" if installed with vent hose

6

Application

For single-line systems with return line in oil fired systems for continuous de-aeration. Suitable for the following media: fuel oil EL (DIN 51603-1) and diesel fuel (EN 590) as well as biofuel and biodiesel with max. 20 % FAME. Also for use in flood hazard areas. The risk of a leak in the return line going unnoticed is removed with Flow-Control. It is no longer necessary to regularly check the return line for leaks.

Description

Automatic fuel oil de-aerator consisting of a diecast zinc housing with female G¼ connection thread at the tank end and male G⅜ connection threads with 60° cone at the burner end for connection of the burner hoses. De-aerator hood made of transparent plastic. Flow-Control 3/K features two separate float chambers. The lower float chamber contains the operating float; the upper float chamber contains the safety float. The upper float chamber keeps oil foam from escaping via the vent opening (e.g. during commissioning/filter exchange) and indicates malfunctions of the vent valve. An oil hose with ball-shaped sealing for 60° cone and a G⅜ union nut is supplied for connection to the fuel oil filter. Watertight up to 10 m water column. All Flow-Control versions are TÜV-tested.

Flow-Control 3/K (G¼) with G¼ female thread instead of G⅜ male thread.

Technical specifications

Burner connection
G⅜ male with 60° cone for burner hose or G¼ female (part no. 69978)

Tank connection
G¼ female or oil hose G¼male x G⅜ union nut for connection to filter

Nozzle capacity
Max. 100 l/h

Return flow
Max. 120 l/h

Separating capacity air/gas
Approx. 4 l/h

Mounting position
Float housing vertical to the top

Operating temperature range
Medium: Max. 60 °C
Ambient: Max. 60 °C

Operating overpressure
Max. 0.7 bar
corresponds to static oil column of approx. 8 m

Test pressure
6 bar

Dimensions
W x H x D: 95 x 147 x 95 mm

Approval
TÜV-tested (S 133 2013 E2)

Approval for construction products
Conformity certificate (ÜHP)
as per EN 12514-2

i

The devices must not be subjected to undiluted additives, alcohol and acids.

DG: G, PG: 1			Part no.	**Price €**
Flow-Control 3/K	1	-	**69930**	
Flow-Control 3/K (G¼)	1	-	69978	

Automatic fuel oil de-aerator Flow-Control 3/K HT TÜV-tested

- **High temperature version: Up to a temperature of the medium of 80 °C**
- **Dual float safety system keeps oil foam from escaping**
- **Considerably increased fuel oil filter service life – the amount of filtered oil drawn from the tank corresponds exactly to the oil burnt**
- **No unnoticed leakage in the return line**

"PROOFED BARRIER" if installed with vent hose

Application

For single-line systems with return line in oil fired systems for continuous de-aeration. Suitable for the following media: fuel oil EL (DIN 51603-1) and diesel fuel (EN 590) as well as biofuel and biodiesel with up to 100 % FAME as well as vegetable oils (colza oil). Also for use in flood hazard areas. Flow Control 3/K HT is recommended for mounting below the max. fuel oil level in the tank and for any application requiring particular safety.

Description

Automatic fuel oil de-aerator consisting of a diecast zinc housing with female G¼ connection thread at the tank end and male G⅜ connection threads with 60° cone at the burner end for connection of the burner hoses. An oil hose with ball-shaped sealing for 60° cone and a G⅜ union nut is supplied for connection to the fuel oil filter. The de-aerator hood consists of glass-fibre reinforced plastic (not transparent), all seals are made of FKM. Flow-Control 3/K HT features 2 separate float chambers. The lower float chamber contains the operating float; the upper float chamber contains the safety float. The upper float chamber keeps oil foam from escaping via the vent opening (e.g. during commissioning/filter exchange) and also indicates malfunctions of the vent valve. The risk of a leak in the return line going unnoticed is removed with the single-line system.It is no longer necessary to regularly check the return line for leaks. Also suitable for pressure mode up to 0.7 bar. Watertight up to 10 m water column.

Technical specifications

Burner connection
G⅜ male with 60° cone for burner hose or G¼ female (part no. 70014)

Tank connection
G¼ female or oil hose G¼ male x G⅜ Union nut for connection to filter

Nozzle capacity
Max. 100 l/h

Return flow
Max. 120 l/h

Separating capacity air/gas
Approx. 4 l/h

Mounting position
Float housing vertical to the top

Seals
FKM

Operating temperature range
Medium: Max. 80 °C
Ambient: Max. 60 °C

Operating overpressure
Max. 0.7 bar
(corresponds to static oil column of approx. 8 m)

Test pressure
6 bar

Dimensions
W x H x D: 95 x 147 x 95 mm

Approval
TÜV-tested (S 133 2013 E2)

Approval for construction products
Conformity certificate (ÜHP)
as per EN 12514-2

i

The devices must not be subjected to undiluted additives, alcohol and acids.

DG: G, PG: 1			Part no.	**Price €**
Flow-Control 3/K HT	1	-	**69929**	

Automatic fuel oil de-aerator FloCo-Top-2 TÜV-tested

Advantages – your benefits

- **Multiple filtration for maximum separation of dirt particles**
- **Reduced height facilitates installation if mounting space is limited**
- **Vacuum gauge indicates when it is time to replace the filter**
- **Easy installation with click system and AFRISO universal screw connection or standard screw connection**
- **PROOFED BARRIER if installed with vent hose**
- **Suitable for use in flood hazard areas**

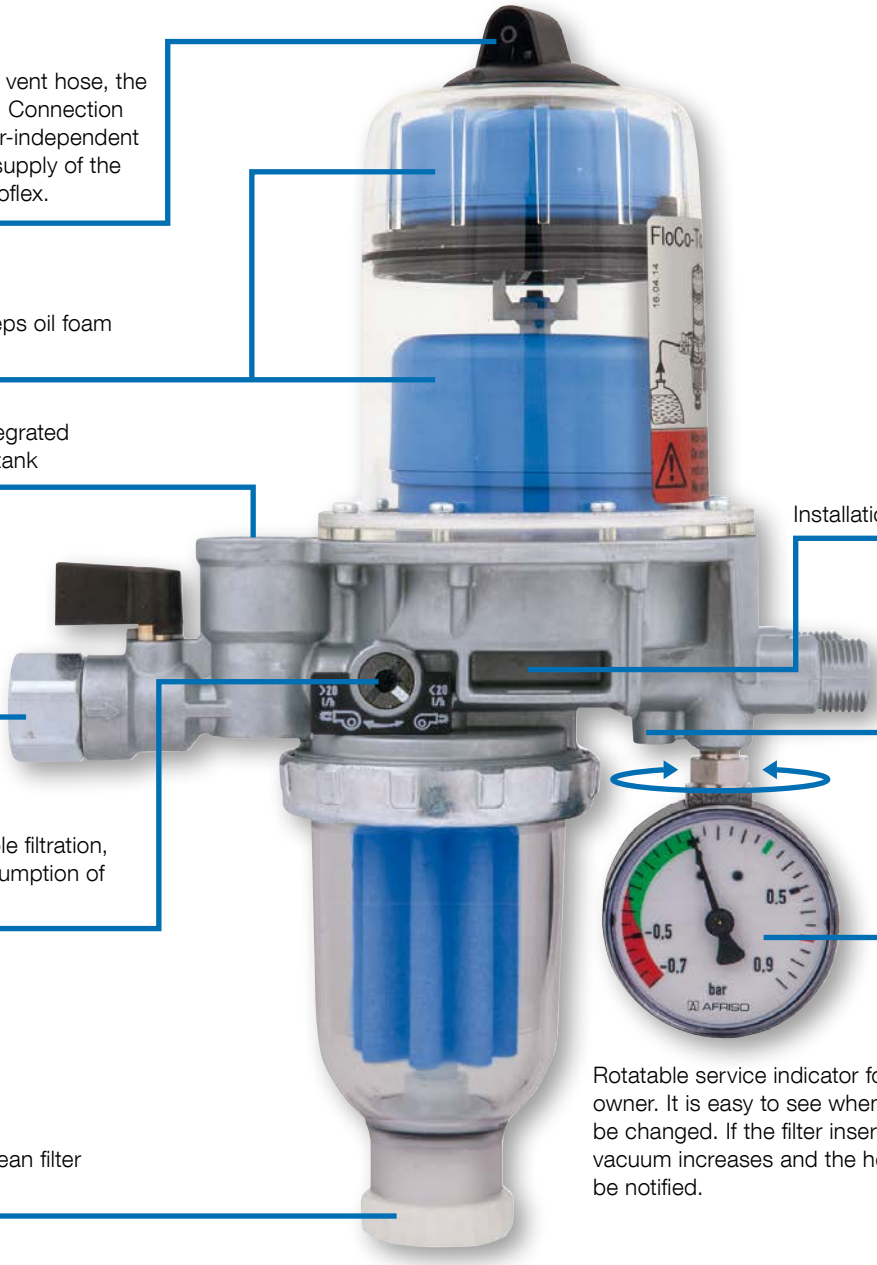

The oil is de-aerated via the vent hose, the system remains odour-tight. Connection via supply air of the room air-independent ventilation of via the return supply of the tank withdrawal system Euroflex.

Dual float safety system keeps oil foam from escaping

Backflow preventer with integrated pressure relief towards the tank

Pipe connection via universal screw connection or standard screw connection

Changeover valve for multiple filtration, e.g. for burners with a consumption of < 20 l/h

Drain system for fast and clean filter change

Installation with click system

Bypass valve for draining the oil, e.g. for burner hose replacement

Rotatable service indicator for the system owner. It is easy to see when the filter needs to be changed. If the filter insert is polluted, the vacuum increases and the heating expert can be notified.

Opticlean MC-7

Innovative multiple filtration

With an Opticlean filter insert, 50 % of the particles in the circulated oil are removed with a filter rating of 5 µm (99 % separation of particles > 20 µm) per filtration. This means that several filtration processes result in a genuine 5 µm filtration! The quality of the fuel oil continuously improves.

Automatic fuel oil de-aerator FloCo-Top-2 TÜV-tested

- **Multiple filtration for maximum separation of dirt particles**
- **Backflow preventer with integrated pressure relief towards the tank**
- **Drain system for fast and clean filter change**
- **Bypass valve for easy and clean burner hose replacement**

A Page 146
A Page 138

Application

For single-line systems with return line in oil fired systems for continuous de-aeration. Suitable for the following media: fuel oil EL (DIN 51603-1) and diesel fuel (EN 590) as well as biofuel and biodiesel (EN 14214) with max. 20 % FAME. Also for use in flood hazard areas. FloCo-TOP-2 can be installed in any system. Multiple filtration is recommended for burners with an oil consumption of < 20 l/h while larger systems should be operated with single filtration.

Description

Automatic fuel oil de-aerator, safety version, with integrated filter, shut-off valve and vacuum gauge. Housing with changeover valve for multiple filtration as well as backflow preventer with integrated pressure relief towards the tank. Compact de-aerator hood made of transparent plastic with dual float safety system to keep oil foam from escaping via the de-aerator opening. The vent hose is connected at the side in an unobtrusive way. For venting, the oil is guided via the float chamber and can then be added directly to the flow or it can be filtered again by switching a valve. In the case of multiple filtration, the return oil increases the flow rate so that the filter bowl is permanently filled with de-aerated oil. In service mode, the vacuum gauge indicates the pump vacuum. The shut-off valve can be closed to check the suction capacity of the burner pump.Increased vacuum provides information on the degree of pollution of the filter. The drain unit ensures that replacing the filter is easy and clean: Connect the hose, open the drain valve, loosen the union nut of the filter cup and drain the oil in a controlled way. When the burner hose needs to be replaced, it is sufficient to open a bypass valve so that the oil is drained from the float chamber via the filter cup and the drain unit. Watertight up to 10 m water column.

Technical specifications

Burner connection
G⅜ with 60° cone for burner hoses

Tank connection
G⅜ female

Nozzle capacity
Max. 100 l/h

Return flow
Max. 120 l/h

Separating capacity air/gas
> 4 l/h

Mounting position
Float housing vertical to the top

Operating temperature range
Medium/ambient: Max. 60 °C

Operating overpressure
Max. 0.7 bar (corresponds to static oil column of approx. 8 m)

Test pressure
6 bar

Vacuum gauge
Range: -0.7/+0.9 bar

Dimensions (W x H x D)
Short cup: 183 x 254 x 103 mm
Long cup: 183 x 348 x 103 mm

Material
Housing: Zinc die cast
De-aerator hood: Transparent plastic
Filter cup: Transparent plastic

Approval
TÜV-tested (S 133 2013 E2)

Approval for construction products
Conformity certificate (ÜHP)
as per EN 12514-2

Scope of delivery
- Fuel oil de-aerators
- Universal screw connections for pipes Ø 6/8/10 mm
- Bracket with mounting material
- Cover for connection of the vent hose
- Drain hose

Automatic fuel oil de-aerator FloCo-Top-2 TÜV-tested

DG: G, PG: 1		Filters	Filter surface			Part no.	Price €
	FloCo-Top-2KM Si	Sintered plastic sieve short, 50 µm	115 cm²	1	-	**70110**	
	FloCo-Top-2KM MS-5	Opticlean MS-5 short, 20–35 µm	500 cm²	1	-	**70134**	
	FloCo-Top-2KM Optimum Si	Sintered plastic sieve Optimum, 50 µm	200 cm²	1	-	70115	
	FloCo-Top-2KM MC-7	Opticlean MC-7 short, 5–20 µm	700 cm²	1	-	70112	
	FloCo-Top-2KM Optimum MC-18	Opticlean MC-18 long, 5–20 µm	1,850 cm²	1	-	**70114**	
Spare parts			PG				
	Vacuum gauge	-0.7/+0.9 bar	2	1	10	**70030**	
	Bracket for FloCo-Top-2 series	-	1	1	-	**70127**	

Automatic fuel oil de-aerator FloCo-Top-1K TÜV-tested

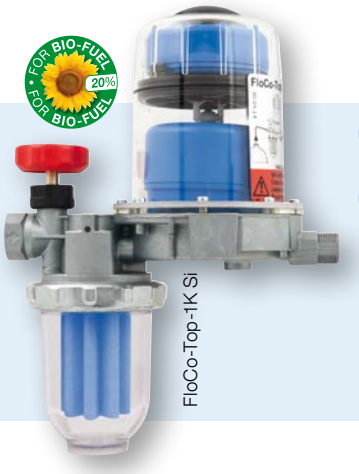

- **Fuel oil de-aerator, filter and shut-off valve in a single, compact unit.**
- **Safety system keeps oil foam from escaping**

A Page 146

A Page 138

Application

For single-line systems with return line in oil fired systems for continuous de-aeration. Suitable for the following media: fuel oil EL (DIN 51603-1) and diesel fuel (EN 590) as well as biofuel and biodiesel with max. 20 % FAME. Also for use in flood hazard areas.

Description

Automatic fuel oil de-aerator, safety version, with integrated filter and shut-off valve. Metal zinc die cast with G⅜ connection thread at the tank end and male G⅜ connection threads at the burner end with female cone at the burner end to connect the burner hoses. The de-aerator hood is made of transparent plastic and features two separate float chambers. The lower float chamber contains the operating float; the upper float chamber contains the safety float. The upper safety float chamber keeps oil from escaping through the vent opening. In addition, it is possible to detect malfunctions in the de-aeration system. Watertight up to 10 m water column.

Technical specifications

Burner connection
G⅜ male with 60° cone for burner hoses

Tank connection
G⅜ female

Nozzle capacity
Max. 100 l/h

Return flow
Max. 120 l/h

Separating capacity air/gas
Approx. 4 l/h

Mounting position
Float housing vertical to the top

Operating temperature range
Medium: Max. 60 °C
Ambient: Max. 60 °C

Operating overpressure
Max. 0.7 bar
corresponds to static oil column of approx. 8 m

Test pressure
6 bar

Dimensions
W x H x D: 165 x 221 x 99 mm

Material
Housing: Zinc die cast
De-aerator hood: Transparent plastic
Filter cup: Transparent plastic

Approval
TÜV-tested (S 133 2013 E2)

Approval for construction products
Conformity certificate (ÜHP)
as per EN 12514-2

Scope of delivery
- Fuel oil de-aerators
- Bracket with mounting material
- Cover for connection of the vent hose

DG: G, PG: 1	De-aerator hood	Filters	Filter cup	Part no.	**Price €**
FloCo-Top-1K Si	Plastic	Sintered plastic sieve short, 50 µm	Short	**69960**	
Spare part					
Bracket FloCo-Top-1 series	-	-	-	**69946**	

Accessories for fuel oil de-aerators/oil filters

Screw connections

Description For installation in the oil pipe. See ordering table for versions.

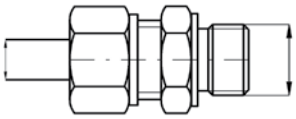

Screw connection

Vacuum gauge

Description For indication of the filter condition. Available for direct mounting to standard fuel oil filters. G⅜ union nut at filter end, G⅜ male thread with sealing cone 60° at burner end for burner hose. Or with G⅜ female thread x G⅜ male thread for mounting to filter with G⅜ female thread at tank end. Suitable for use in flood hazard areas. Watertight up to 10 m water column.

Vacuum gauge

Replaceable filter adapter

Description The replaceable fine filter cartridge can be fitted to all AFRISO filter types (except Z ½-500 and V ½-500) by means of an adapter and can then be operated both in pressure and suction mode.

Replaceable filter adapter

Oil filter spanner

Description To loosen the union nut of the filter cup and the replacement system fine filter cartridge of automatic fuel oil de-aerators and fuel oil filters

Open end spanner

Description For easy and fast operation of the replaceable filter adapter.

Oil filter spanner Open end spanner

Hand-held suction pump for fuel oil

Description For commissioning and after faults in the suction line system. With check valve/vent valve.

Hand-held suction pump for fuel oil

DG: G	PG			Part no.	**Price €**
Screw connection G⅜ x 6 mm	3	1	-	**20509**	
Screw connection G⅜ x 8 mm	3	1	-	**20508**	
Screw connection G⅜ x 10 mm	3	1	-	**20510**	
Screw connection G⅜ x 12 mm	3	1	-	**20512**	
Vacuum gauge G⅜ with 60° cone, -0.7/+0.9 bar	2	1	-	**20400**	
Hand-held suction pump for fuel oil	1	1	-	**70058**	
Replaceable filter adapter	2	1	10	**70020**	
Open end spanner for replaceable filter adapter	3	1	-	**70065**	
Oil filter spanner	1	1	25	**70060**	

solar

Pump assemblies for heating and solar thermal systems

Boiler safety group assemblies

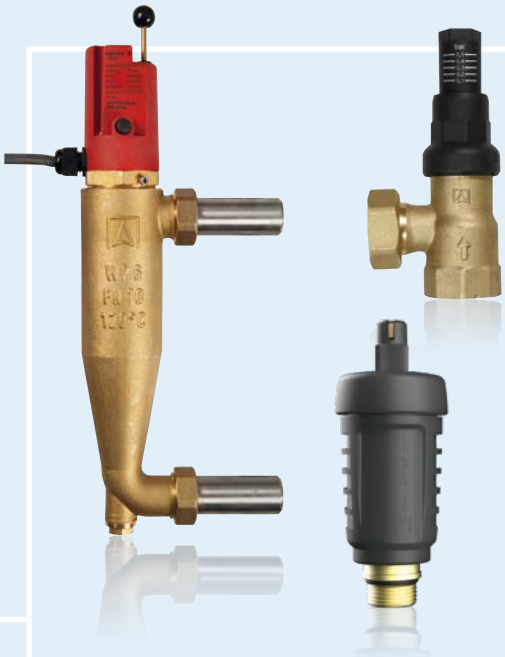

Safety equipment for heating systems

Motorised boiler room vent

CHAPTER 7

Equipment for heating systems, boiler rooms and chimneys

OVERVIEW

Equipment for safe operation of heating systems 150

SUPPLY AND EXHAUST AIR

Motorised boiler room vent Air-Control 152

Draft stabiliser WZB-1 153

SAFETY EQUIPMENT

Boiler water low level alarms WMS 154

Thermal safety valve TAS 03 156

Combustion controller FR 1 156

Quick air vent PrimoVent 157

Boiler safety group assemblies KSG 160

Connection assembly for expansion vessel GAK 162

Air separators 163

Sludge separator 164

Flow filters, combined air/flow filters 165

Anti-tamper cap valves 166

Diaphragm safety valves MS, MSM 167

Differential pressure bypass valve DÜ 168

Boiler filling and drain valves KFE, filling fittings FA, FAM 169

FLOW MEASUREMENT

Flow meters DFM 10-1M, 15-2M, 20-2M 170

HEATING PUMP ASSEMBLIES

3-way/4-way mixing valves ARV 173

Actuators ARM 175

Boiler manifolds KSV 176

Pump assemblies PrimoTherm® 180 DN 25 177

Heating pump assembly PrimoTherm® 180-1/2 DN 25 179

Heating pump assembly PrimoTherm® 180-3 DN 25 for increased return temperature 183

Charging unit RTA 60 DN 25 185

Heating pump assembly PrimoTherm® 180-1/2 DN 32 187

Heating pump assembly PrimoTherm® 180-3 DN 32 for increased return temperature 191

SOLAR THERMAL EQUIPMENT

Solar pump assemblies PrimoSol® 130 193

Filling and flushing unit, diaphragm safety valve MSS, connection kit 196

Quick air vents for solar systems, air separators 197

Collector tank for solar liquid 198

SINGLE ROOM CONTROLLER

Single room temperature controllers CosiTherm® 199

Single room temperature controller CosiTherm® - wired 201

Single room temperature controller CosiTherm® - wireless 204

Room temperature sensor FT - wireless 207

Room temperature sensor D - wired 208

Room thermostat TA 03 209

Single room controller RTL-Box 324 Vario 212

MANIFOLD SYSTEMS

Thermal actuators TSA-02/03 211

Heating circuit manifolds ProCalida® MC, EF, VA 215

Geothermal manifold ProCalida® GT, Drinking water manifold 216

Equipment for safe operation of heating systems

AFRISO offers a broad range of products for the safe operation of heating systems. Irrespective of whether the heating system uses renewable energy or fossil fuels.

Anti-siphon valves, withdrawal systems, level sensors, leak detectors and overfill prevention systems increase the safety of fuel oil storage facilities. Boiler safety group assemblies, solar and heating pump assemblies, connection assemblies for expansion vessels, anti-tamper cap valves, boiler safety group assemblies, diaphragm safety valves, control thermostats, thermal safety valves and boiler water low level alarms are provided as equipment for heating systems.

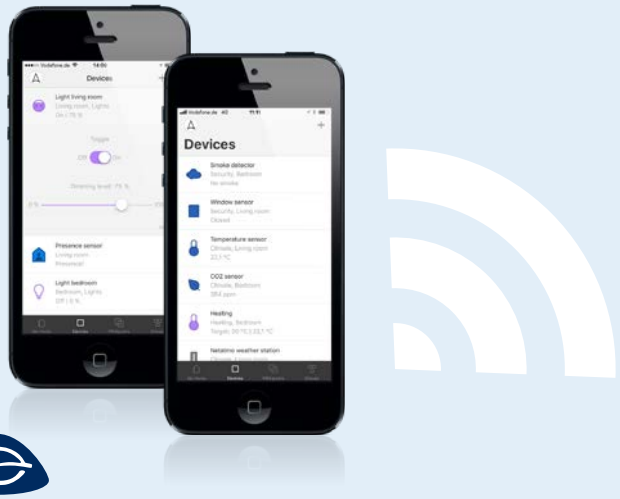

enocean®

The EnOcean® wireless technology allows you to easily integrate alarm units and sensors into building automation systems and operate them conveniently via smartphones or tablets.

AFRISO products in a heating system with oil burner and solar thermal system

1. Motorised boiler room vent Air-Control
2. Water valve WaterControl 01 for wireless control
3. Wireless conductivity water sensor WaterSensor BWS
4. Water filter WAF 04-R
5. Boiler safety group assembly BFK 12
6. Solar pump assembly PrimoSol® 130-4
7. Collector tank for solar liquid
8. Heating pump assembly PrimoTherm®
9. Boiler water low level alarm WMS-WP6
10. Boiler safety group assembly KSG
11. Sludge separator
12. Air separator
13. Connection assembly for expansion vessels GAK
14. Automatic fuel oil de-aerator FloCo-Top-2
15. Piston type anti-siphon valve KAV
16. Tank contents gauge MT-Profil
17. Level sensor GWG with metallised sleeve
18. Withdrawal system Euroflex
19. Vent cap
20. Level sensor filler cap and GWG fitting for wall mounting type 905
21. Oil/water alarm unit OM 5
22. Digital tank contents indicator DTA 20 E (wireless)
23. Pneumatic level indicator for water
24. Pull cord

Oil tank conversion kits

25 Calmed inlet
26 Manhole cover
27 Cartridge filter

28 Combination block for compact radiator with valve VarioQ Kombi
29 Thermostat control head 323
30 Door/Window contact AMC 20
31 Wireless window blind actuator
32 Indoor siren AIS 10
33 Single room temperature controller CosiTherm® Wireless
34 Manifold ProCalida® for underfloor heating systems
35 Room air monitoring: Wireless CO_2 sensor
36 Battery-less mechanical water alarm WaterSensor eco
37 Wireless room temperature sensor FT
38 Wireless rocker switch FT4F-rw
39 AFRISOhome gateway HG 01
40 Wireless heat detector AHD 10
41 Thermostat combination block Vario THK
42 Wireless smoke alarm ASD 10
43 Air separator combination Solar LKS

Motorised boiler room vent Air-Control

- **Saves heating costs, is reliable and silent**
- **System or room cannot cool down**
- **Sturdy, impact-resistant plastic**
- **Complete with accessories for easy installation**

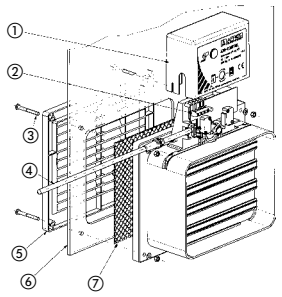

① Hood PVC
② Terminal block
③ Fixing screw
④ Connection cable (4-wire)
⑤ Protective grille
⑥ Window/wall (by client)
⑦ Insect screen stainless steel mesh

Application

Suitable for installation in basement windows or ventilation ducts for burner-controlled oxygen supply of boiler rooms with oil and gas fired burners of up to 50 kW. System or room cannot cool down.

Description

Burner-controlled motorised boiler room vent, consisting of a robust, impact-resistant plastic housing with injection-moulded mounting flange, a mating flange with a protective grille and a gear motor for actuating the slide. Can also be operated manually; with function indication.
Boiler rooms which are equipped with oil or gas fired burners must be supplied with a sufficient amount of oxygen (e.g. in accordance with the German FeuVo). This is often achieved by constantly open boiler room windows or by inlet air ducts. The cold air which constantly flows into the boiler room causes the boiler and the water supply as well as the pipes to cool down. As a result, the burner is switched on more frequently and consumes unnecessarily high amounts of fuel.
Air-Control is mounted onto the pane and is electrically connected to the boiler thermostat. Air-Control can also be mounted onto air ducts. The window remains closed and keeps the warmth inside. As soon as the boiler temperature drops, the boiler thermostat switches on Air-Control. Opening the vent activates a microswitch which closes the burner circuit. The burner starts to operate only when the motorised boiler room vent is open and is supplied with pre-warmed ambient air in the ignition phase. The motorised boiler room vent remains open during the entire combustion process and provides the boiler room with enough fresh air. The burner switches off when the preset temperature is reached. Air-Control closes automatically.

Technical specifications

Housing
Plastic (ABS)
W x H x D: 260 x 300 x 115 mm
Weight 1.0 kg
Degree of protection IP 20 (EN 60529)

Installation opening
216 x 166 mm

Cross section fresh air supply
150 cm²

Supply voltage
AC 230 V

Contact rating
AC 250 V, 2 A

Burner capacity
Max. 50 kW. For larger installations, several Air-Control units can be installed.

DG: G, PG: 1	Part no.	**Price €**
Air-Control	**69964**	

Draft stabiliser WZB-1

- **Saves heating costs, optimises combustion and keeps the chimney draft constant**
- **Stabilises the chimney draft**
- **For oil, gas or solid fuel systems**

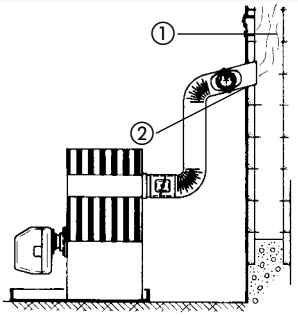

① "Chimney connection" always above flue connection
② "Flue gas connection" with pipe connection piece

Application

The draft stabiliser for oil, gas or solid fuel systems keeps chimney draft constant and the chimney dry. Suitable for connection to flue gas pipes with Ø 120 to 200 mm by means of pipe connection pieces or to brickwork chimneys or chimneys with several walls by means of special connection pieces.

Description

Draft stabiliser made of galvanised sheet steel with flap. The flap is set by means of a rotary knob acting on a weight for precise adjustment. Depending on the adjustment of the weight, the flap admits more or less secondary air into the chimney when the vacuum gets too high.

The natural chimney draft is approx. 20 to 50 Pa, depending on the height and the cross section of the chimney as well as the weather conditions. These values increase when the temperature increases. The draft stabiliser allows for setting the vacuum required by the manufacturer of the heating system (oil or gas burner/boiler combination, oil or gas furnace, etc.) and keeps this vacuum almost constant. Correct chimney draft is a prerequisite for an optimum combustion process and contributes to a reduction in heating costs.

The draft stabiliser performs the following functions:
- It limits the vacuum to the required value.
- It keeps the chimney dry and prevents soot deposits.

Technical specifications

Adjustment range (draft requirements):
10/26 Pa

Application area
Heights of up to 20 m and chimney group I/II up to 400 cm², chimney group III up to 500 cm²

Operating temperature range
Flue gas: Max. 400 °C

Mounting position
Flap axis horizontal
Flap vertical

Tightness at Δp 10 Pa
< 3 m³/h

DG: G, PG: 3			Part no.	**Price €**
Draft stabiliser WZB-1	1	-	**69760**	
Mounting sleeves				
Chimney sleeve for WZB-1	1	-	**69761**	
Pipe connection piece Ø 120/130 mm	1	-	**69762**	
Pipe connection piece Ø 150/160 mm	1	-	**69764**	
Pipe connection piece Ø 180 mm	1	-	**69765**	
Pipe connection piece Ø 200 mm	1	-	**69766**	

Boiler water low level alarm WMS-WP6 – mechanical

- **For protection of the boiler when the water level is too low**
- **TÜV-tested as a water level switch**
- **Direct mounting via welding socket or connection thread**
- **With test button for function check**

Version with connection R2 AG

Application

For sealed heating systems to protect the boiler as per EN 12828 in the case of low water levels.

Description

Mechanical boiler water low level alarm with float. Consisting of a cast brass body with welding sockets and a float mechanism, an electrical switch, test and unlock buttons. TÜV-tested as a water level switch. If the water level in the boiler drops below a minimum level, a float activates a switch. The power supply to the boiler is interrupted. A locking mechanism keeps the burner from switching back on automatically. The test button allows the float to be lowered to simulate a low water alarm condition.

Version WMS-WP6-R2 with male connection thread R2 for direct installation in the boiler.

Technical specifications

Operating temperature range
Medium: Max. 120 °C
Ambient: Max. 120 °C

Housing
Cast brass
Height: 358 mm
Degree of protection IP 54 (EN 60529)

Float
Plastic

Connection
Welding socket DN 20
or male thread R2

Operating pressure
Max. 10 bar

Test pressure
15 bar

Contact rating
AC 250 V, 6 (2) A

Type approval mark
TÜV.HWB.15-232

Dimensions (mm)

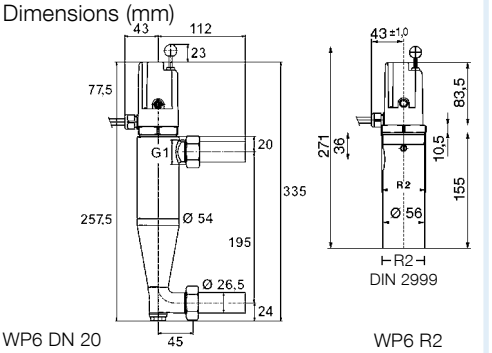

i

According to EN 12828, sealed heating systems with capacities of more than 300 kW must be equipped with a TÜV-tested boiler water low level alarm.

DG: G, PG: 2			Part no.	Price €
WMS-WP6 with welding socket DN 20	1	15	42300	
WMS-WP6 without locking, with welding socket DN 20	1	15	42305	
WMS-WP6-R2 with connection thread R2 male	1	-	42319	
Spare parts				
Upper part WMS-WP6 with locking	1	-	42310	
Upper part WMS-WP6 without locking	1	-	42311	
Probe body for WMS-WP6 DN 20	1	-	42368	

Boiler water low level alarm WMS 2-1/3-1 – electronic

- For protection of the boiler when the water level is too low
- Electronic version with visual alarm and power outage lock.
- TÜV-tested as a water level switch
- Direct mounting via welding socket

A Page 83

Application

For sealed heating systems to protect the boiler as per EN 12828 and VdTÜV sheet "Water Level 100" (edition 07, 2006) in the case of low water levels.

Description

This self-monitoring electronic boiler water low level alarm with integrated power outage lock operates on the basis of the conductivity principle (resonant circuit). Consisting of control unit in wall mounting housing with test and unlock buttons, visual alarm, angled probe with welding sockets, electrode and electrode test facility. TÜV-tested as a water level switch.
If the water level in the boiler drops below a minimum level, the electrode is no longer submerged. The electronic system de-energises a relay which switches off the power supply for the burner and activates the alarm lamp. The electrical locking mechanism keeps the burner from switching back on automatically. The test button allows you to simulate a low water alarm condition.

Version WMS 3-1 for external power outage lock.

Technical specifications

Operating temperature range
Medium: Max. 120 °C
Ambient: 0/55 °C

Supply voltage
AC 230 V

Switching output
Relay contact: 1 x changeover contact
Contact rating: AC 250 V, 2 A

Housing control unit
Wall mounting housing made of impact-resistant plastic (ABS)
W x H x D: 100 x 188 x 65 mm
Degree of protection: IP 40 (EN 60529)

Housing probe
Probe body: Cast brass
Housing: Thermoplast GV
Electrode rod: Stainless steel 1.4571
Degree of protection: IP 54 (EN 60529)

Probe cable
H0 5 RN-F 2 x 1 mm²; length: 1.5 m

Connection
Welding sockets, steel, DN 20
W x H x D: 130 x 270 x 44 mm

Pressure range: Max. 10 bar

Probe voltage: Max. 12 V

Mark of conformity
WMS 2-1: TÜV HWB 14-345
WMS 3-1: TÜV HWB 14-348

Maße (mm)

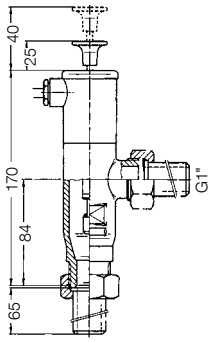

DG: G, PG: 2			Part no.	Price €
WMS 2-1, brass with welding socket DN 20	1	5	42351	
WMS 3-1, brass with welding socket DN 20	1	5	42352	
Spare parts				
Control unit for WMS 2-1	1	1	42356	
Control unit for WMS 3-1	1	1	42357	
Probe WMS brass with welding socket DN 20	1	1	42362	

i

According to EN 12828, sealed heating systems with capacities of more than 300 kW must be equipped with a TÜV-tested boiler water low level alarm.

Thermal safety valve
Combustion controllers

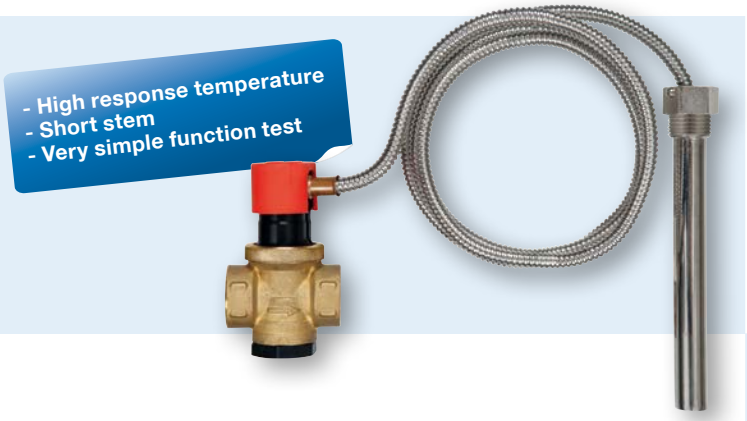

Thermal safety valve TAS 03

Application

To protect sealed or open solid fuel heating systems as per EN 12828 with a heating capacity of up to 86,000 kcal. Also required for dual-fuel boilers which can be operated with solid fuels.

Description

Thermal safety valve with two independent sensor systems. TAS consists of a valve housing, a valve, two independent bellow type displacement probes with liquid-filled temperature probes and a pocket. The capillary tube is protected by a flexible metal hose. TAS is connected to the water outlet of the water heater or to the inlet of the safety heat exchanger. If the response temperature is exceeded, the valve is opened by the thermal probe and cooling water is supplied to keep the system from exceeding the maximum operating temperature. Correct operation of TAS can be verified quickly and easily by simply pressing the valve head.

Technical specifications

Operating pressure: Max. 10 bar

Operating temperature range: Ambient: 80 °C

Response temperature: 99 °C

Blow-off capacity
At 110 °C and Δp = 1 bar > 2.4 m³/h

Connections: 2 x G¾ **female thread**

Connection pocket: G½ male thread

Dimensions
Pocket length: 146 mm
Capillary tube length: 1,300 or 4,000 mm

Housing: Hot-pressed brass

Combustion controller FR 1

For temperature-dependent adjustment of the air supply damper of solid fuel and dual-fuel boilers. Controls correct air supply for optimum combustion.

Installation option FR 1

1 Air supply damper
2 Chain

The FR 1 combustion controller controls the combustion air supply. The temperature in the heat generator is detected by an integrated thermostat. The thermostat is connected to the air supply damper by means of a lever and a chain. The air supply is controlled by means of opening or closing the air supply damper, depending on the boiler flow temperature.

Operating temperature range
Medium: Max. 115 °C
Ambient: Max. 70 °C (at switching button)

Connection: G¾

Dimensions: Pocket length: 53 mm, chain length: 1.2 m

Chain load: 100 to 600 g

Mounting position: Horizontal or vertical

Materials
Housing: Plastic
Stem: Brass
Lever/chain: Galvanised steel

DG: G, PG: 2			Part no.	Price €
Thermal safety valve TAS 03, capillary tube 1.3 m	1	-	42415	
Thermal safety valve TAS 03, capillary tube 4 m	1	-	42418	
Screw connector kit for TAS 03	1	20	42450	
Pocket G½ for TAS 03	1	10	42449	
Combustion controller FR 1	1	10	42294	

i See chapter 11 for the complete range of temperature measuring instruments and controllers.

Automatic quick air vents PrimoVent

Air in the system is a frequent cause of malfunctions of heating, cooling and solar systems. The cause of "air in the system" should be able to removed. However, there are no systems that are always 100 % tight. The AFRISO PrimoVent product family continuously and automatically removes air from heating and solar systems, thus helping to avoid corrosion caused by air and inclusion of air in systems. AFRISO quick air vents are available as brass, plastic or hybrid versions and are always subjected to a 100 % function test prior to shipment.

Universal application for water and water-glycol mixtures (max. 50 % glycol)

Cover with patented nozzle geometry: The slot-shaped vent opening provides for a high venting capacity

Integrated aqua stop for reliable operation without water leakage. The protective cap does not need to be removed even during initial filling or maintenance.

Protective cap for vent, cannot be lost

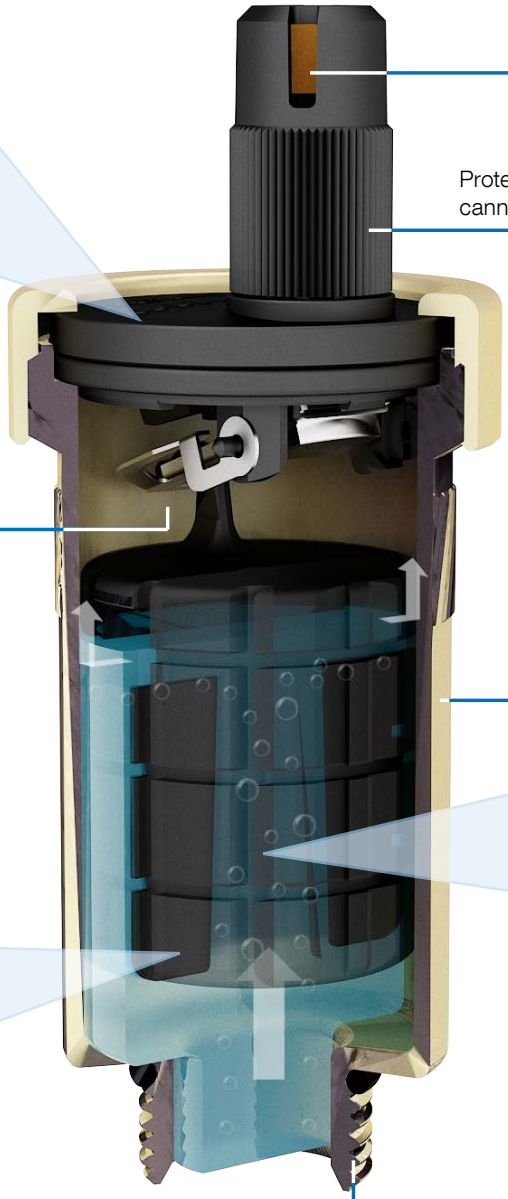

Multifunctional lever for dependable opening and closing of the valve – directly connected to the float so that disconnection is not possible

Slim design for low heat loss – ideal for installations where space is limited

Two-way venting principle: Separated air escapes via the central hole in the float in a defined way without taking along water

Patented float geometry for minimum capillary effect – avoids the formation of an air cushion to suppress undefined "jumps" of the float

Depending on the version: Brass or plastic connection, G⅜ or G½ with O ring seal

i

Mounting valves for quick air vents ensure easy, fast installation. Dismounting is possible at any time without draining the system.

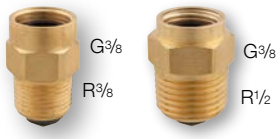

Quick air vent PrimoVent

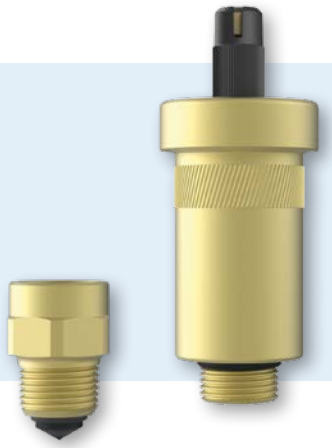

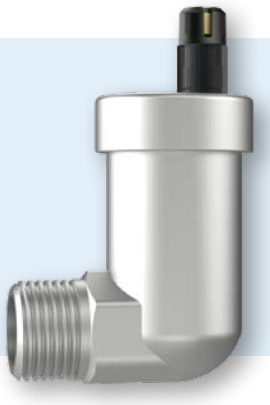

Quick air vent 12 bar

Application

For automatic venting of sealed heating systems as per EN 12828. Suitable for up to 12 bar/110 °C for water and water/glycol mixtures with up to 50 % glycol.

Description

Automatic quick air vent with mounting valve and aqua stop. The vent cap does not have to be removed during operation of the quick air vent, not even for initial filling or servicing. Its high, narrow design is perfect in terms of appearance and function. Self-sealing connection thread.

Technical specifications

Connection
G⅜ or G½

Operating temperature range
Max. 110 °C

Nominal pressure
Max. 12 bar

Housing
Brass

Cover
Glass-fibre reinforced plastic

Union ring
Brass

Angled quick air vent 12 bar

For automatic venting of radiators. Suitable for up to 12 bar/110 °C for water and water/glycol mixtures with up to 50 % glycol.

Automatic quick air vent with aqua stop. The vent cap does not have to be removed during operation of the quick air vent, not even for initial filling or servicing.

Connection
R½ as per DIN 3858

Operating temperature range
Max. 110 °C

Nominal pressure
Max. 12 bar

Housing
Brass, nickel-plated

Cover
Glass-fibre reinforced plastic

Union ring
Brass, nickel-plated

7

DG: G, PG: 2	Mounting valve			Part no.	Price €
Quick air vent G⅜	R⅜	1	25	**77700**	
Quick air vent G⅜	R½	1	25	**77706**	
Quick air vent G⅜	Without	1	25	**77710**	
Quick air vent G½	Without	1	25	**77752**	
Angled quick air vent R½, with aqua stop	Without	1	10	**77753**	
Accessories					
Mounting valve R⅜ x G⅜		–	25	77720	
Mounting valve R½ x G⅜		–	25	77723	

i

Mounting valves as accessories for quick air vents:

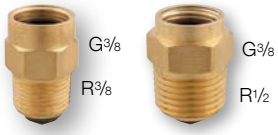

Quick air vent PrimoVent

Plastic quick air vent

Application
For automatic venting of sealed heating systems as per EN 12828. Suitable for water and water/glycol mixtures with up to 50 % glycol.

Description
Automatic quick air vent made of high-grade glass-fibre reinforced plastic (with aqua stop). The vent cap does not have to be removed during operation of the quick air vent, not even for initial filling or servicing. Its high, narrow design is perfect in terms of appearance and function. Sealing by means of O ring. Mounting valves available as accessories.

Technical specifications

Connection
G3/8 or G1/2 with O ring

Operating temperature range
Depending on nominal pressure
Max. 95/120 °C
See operating instructions

Nominal pressure
At 95 °C: Max. 8 bar
At 120 °C: Max. 3.5 bar

Housing
Glass-fibre reinforced plastic

Latching ring
Glass-fibre reinforced plastic

Quick air vent Hybrid

Application
For automatic venting of sealed heating systems as per EN 12828. Suitable for water and water/glycol mixtures with up to 50 % glycol.

Description
Automatic quick air vent made of high-grade glass-fibre reinforced plastic (with aqua stop). Its high, narrow design is perfect in terms of appearance and function. Sealing by means of O ring. Mounting valves available as accessories.

Technical specifications

Connection
G3/8, brass with O ring

Operating temperature range
Depending on nominal pressure
Max. 95/120 °C
See operating instructions

Nominal pressure
At 95 °C: Max. 8 bar
At 120 °C: Max. 3.5 bar

Housing
Glass-fibre reinforced plastic

Latching ring
Glass-fibre reinforced plastic

7

i

Mounting valves as accessories for quick air vents:

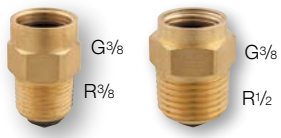

DG: G	Mounting valve	PG			Part no.	Price €
Plastic quick air vent G3/8	Without	1	1	25	**77766**	
Plastic quick air vent G1/2	Without	1	1	25	**77761**	
Quick air vent Hybrid G3/8	Without	1	1	25	**77729**	
Quick air vent Hybrid G3/8	R3/8	1	1	25	**77730**	
Accessories						
Mounting valve R3/8 x G3/8		2	–	25	77720	
Mounting valve R1/2 x G3/8		2	–	25	77723	

Boiler safety group assemblies KSG

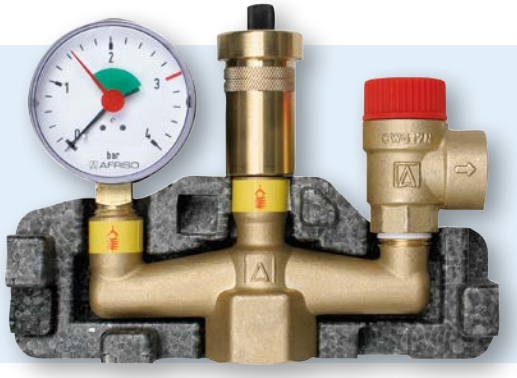

KSG Mini – 2.5 bar/3 bar

Application

For sealed heating systems as per EN 12828 with a capacity of up to 50 kW.

Description

Complete, pre-assembled, tightness-tested boiler safety group assembly, lightweight design. Consisting of carrier, pressure gauge for indicating the system pressure, quick air vent and diaphragm safety valve MS, including form-fit insulation. With self-sealing mounting valves for easy replacement of pressure gauge and quick air vent.

Technical specifications

Boiler connection
G1 female thread

Operating temperature range
Max. 120 °C

Dimensions
W x H x D: 140 x 150 x 75 mm

Insulation
Polystyrene EPS

Carrier
Brass

Diaphragm safety valve MS
Inlet x outlet: G½ x G¾
Seal: PTFE sealing ring, can be rotated
Response pressure: 2.5 bar or 3 bar

Pressure gauge for heating installations
Range: 0/4 bar
Diameter: 50 mm–G¼ bottom back

Quick air vent
Inlet: G⅜
Nominal pressure: 12 bar

KSG – 3 bar

Application

For sealed heating systems as per EN 12828 with a capacity of up to 50 kW.

Description

Complete, pre-assembled, tightness-tested boiler safety group assembly. Consisting of carrier, pressure gauge for indicating the system pressure, quick air vent and diaphragm safety valve MS, including form-fit insulation. With self-sealing mounting valves for easy replacement of pressure gauge and air vent.

Technical specifications

Boiler connection
G1 female thread

Operating temperature range
Max. 120 °C

Dimensions
W x H x D: 183 x 144 x 70 mm

Insulation
Expanded polypropylene EPP

Carrier
Brass

Diaphragm safety valve MS
Inlet x outlet: G½ x G¾
Seal: PTFE sealing ring, can be rotated
Response pressure: 3 bar

Pressure gauge for heating installations
Range: 0/4 bar
Diameter: 63 mm–G⅜ bottom

Quick air vent
Inlet: G⅜
Nominal pressure: 12 bar

DG: G, PG: 2	kW	bar	Connection	Insulation			Part no.	**Price €**
KSG Mini, 2.5 bar	Max. 50	2.5	G1	Yes	1	10	**77620**	
KSG Mini, 3 bar	Max. 50	3	G1	Yes	1	10	**77623**	
KSG	Max. 50	3	G1	Yes	1	10	**77938**	

Boiler safety group assemblies KSG

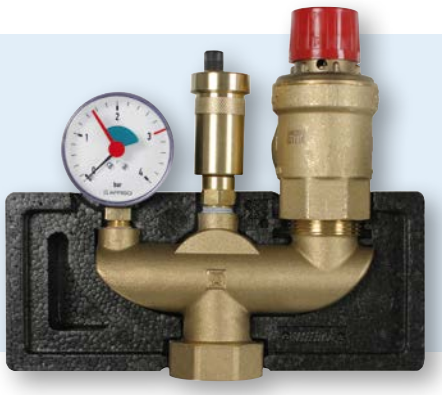

KSG Maxi – 3 bar

Application

For sealed heating systems as per EN 12828 with a capacity of up to 100 kW.

Description

Complete, pre-assembled, tightness-tested boiler safety group assembly. Consisting of carrier, pressure gauge for indicating the system pressure, quick air vent and diaphragm safety valve MS. With self-sealing mounting valves for easy replacement of pressure gauge and quick air vent. With insulation.

Technical specifications

Boiler connection
G1 female thread

Operating temperature range
Max. 120 °C

Dimensions
W x H x D: 183 x 144 x 70 mm

Carrier
Brass

Diaphragm safety valve MS
Inlet x outlet: G¾ x G1
Seal: PTFE sealing ring, can be rotated
Response pressure: 3 bar

Pressure gauge for heating installations
Range: 0/4 bar
Diameter: 63 mm – G⅜ centre back

Quick air vent
Inlet: G⅜
Nominal pressure: 12 bar

KSG Magnum – 3 bar

For sealed heating systems as per EN 12828 with a capacity of up to 200 / 350 kW.

Complete, pre-assembled, tightness-tested boiler safety group assembly. Consisting of carrier designed as multi-way union, pressure gauge for indicating the system pressure, quick air vent and diaphragm safety valve MS. With self-sealing mounting valves for easy replacement of pressure gauge and quick air vent. The form-fit insulation is also used to package the product for safe transport.

Boiler connection
Up to 200 kW: G1¼ female thread
Up to 350 kW: G1½ female thread

Operating temperature range
Max. 120 °C

Dimensions
W x H x D: 230 x 175 x 104 mm

Insulation
Polypropylene EPP

Carrier
Brass

Diaphragm safety valve MS
Up to 200 kW (inlet x outlet): G1 x G1¼
Up to 350 kW (inlet x outlet): G1¼ x G1½
Seal: PTFE sealing ring, can be rotated
Response pressure: 3 bar

Pressure gauge for heating installations
Range: 0/4 bar
Diameter: 63 mm – G⅜ bottom

Quick air vent
Inlet: G⅜
Nominal pressure: 12 bar

DG: G, PG: 2	kW	bar	Boiler connection	Insulation			Part no.	Price €
KSG Maxi	Max. 100	3	G1 female	Yes	1	10	**77581**	
KSG Magnum	Max. 200	3	G1¼ female	Yes	1	10	**77627**	
KSG Magnum	Max. 350	3	G1½ female	Yes	1	10	**77628**	

Connection assembly for expansion vessel GAK

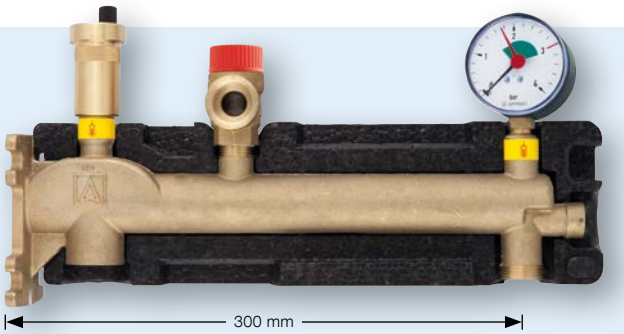

- **Time-saving installation with pre-assembled, tightness-tested assembly**
- **Service-friendly: Pressure gauge, air vent and expansion vessel can be replaced without draining**
- **Safe venting due to top-mounted connection for quick air vent**

Application

For connection of diaphragm expansion vessels up to 50 l for sealed heating systems as per EN 12828 up to a capacity of 50 kW.

Description

Pre-assembled combination fitting consisting of:
- Carrier made of solid cast brass with integrated anti-tamper cap valve for connection of the diaphragm expansion vessel
- Safety valve with type approval
- Pressure gauge for heating installations with red reference pointer, mounted via self-sealing mounting valve
- Quick air vent (12 bar), mounted via self-sealing mounting valve
- Two form-fit insulation shells

Technical specifications

Connections
Boiler: G¾ female thread
Expansion vessel: G¾ female thread

Operating temperature range
Medium: Max. 120 °C

Dimensions (with insulation)
W x H x D: 360 x 185 x 100 mm

Insulation
Expanded polypropylene EPP

Carrier
Brass, protrusion 300 mm

Diaphragm safety valve MS
Inlet x outlet: G½ x G¾
Seal: Teflon ring, rotatable
Response pressure: 3 bar
Heat capacity: 50 kW

Pressure gauges for heating installations
Bourdon tube pressure gauge with self-sealing mounting valve
Range: 0/4 bar, with red reference pointer
Diameter: 63 mm – G⅜ bottom

Quick air vent
Inlet: G⅜
Nominal pressure: 12 bar

Scope of delivery
- GAK
- 2 insulation shells
- Mounting accessories: Screws, washers, dowels

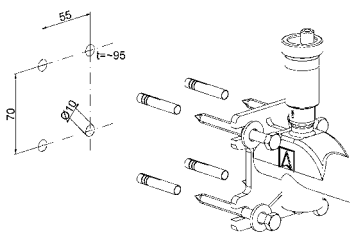

Easy wall mounting of the robust console with mounting accessories (included)

DG: G, PG: 2			Part no.	**Price €**
GAK 3 bar with insulation	1	-	77932	

Air separator

- **Pre-assembled, tightness-tested and heat-insulated assembly**
- **Continuous, automatic venting of the system**
- **Cost savings due to fewer malfunctions and longer service life of the system**
- **Fast and easy integration into existing pipes via reducer unions**

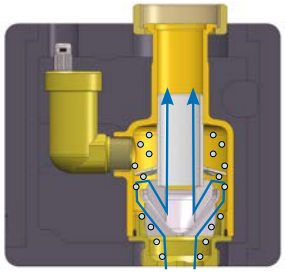

Function principle

Application

For removing air from heating systems. The air separator ensures reliable operation, better and faster heat transfer and thus contributes to reduced fuel consumption and emissions. Suitable for hot water heating systems and underfloor heating systems. Air is removed from the system without chemical additives.

Description

Compact air separator with integrated quick air vent in form-fit insulation. The new function principle with two separation chambers ensures a reduced flow speed for effective separation of air and water. The lower the flow rate in the separator, the better the air bubbles can be removed from the water due to the difference in density. The air bubbles rise, collect in the upper area in a calm zone and are automatically removed by means of the quick air vent without taking along water. The quick air vent features an aqua stop to keep water from escaping. The air separator can be installed in the flow (preferred) or return line. Reducer unions G1 female and G¾ female are available for renovation or retrofitting in existing pipes.

Technical specifications

Housing
Brass

Insulation
EPP

Operating pressure
Max. 10 bar

Operating temperature range
Max. 95 °C

Connections
Top G1½ female (union nut)
Bottom G1½ male

Mounting position
Vertical

Dimensions (mm)

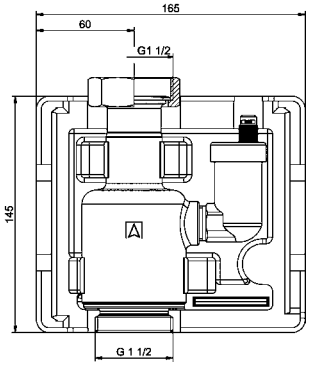

DG: G, PG: 2	Part no.	Prices €
Air separator G1½	**40682**	
Accessories		
Reducer union kit G1 female	**40684**	
Reducer union kit G¾ female	**40685**	

Sludge separator

- **Pre-assembled, tightness-tested and heat-insulated assembly**
- **Single-operation cleaning while the system is running**
- **Energy savings due to improved heat transfer at system components**
- **Fast and easy integration into existing pipes via reducer unions**

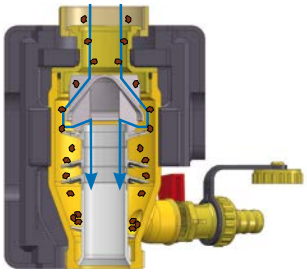

Function principle

Application

For removing dirt particles from heating systems. Particles can cause problems in fittings and control units. The sludge separator ensures clean water, reliable operation, better and faster heat transfer and thus contributes to reduced fuel consumption and emissions. Suitable for hot water heating systems and underfloor heating systems. Rust, lime particles, calcium, magnesium, oxides, carbonates and sludge as well as larger particles such as chips or construction residues are removed from the water – without the use of chemicals. Excellent for the renovation of system parts subject to sludge accumulation.

Description

Compact sludge separator with drain valve in form-fit insulation. The highly efficient concept removes sludge from the water. Plates in the separator deflect the particles into a separate area. From there, the dirt particles can be flushed out during normal operation by means of a valve. The sludge separator can be combined with the air separator and can be installed in the flow (preferred) or return lines. Reducer unions G1 female and G¾ female are available for renovation or retrofitting in existing pipes.

Technical specifications

Housing
Brass

Insulation
EPP

Operating pressure
Max. 10 bar

Operating temperature range
Max. 95 °C

Connections
Top G1½ female (union nut)
Bottom G1½ male

Mounting position
Vertical

Dimensions (mm)

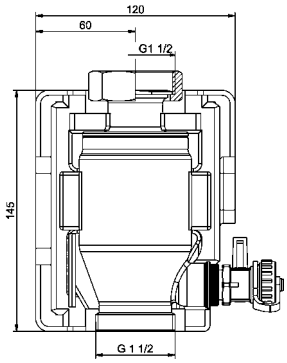

DG: G, PG: 2	Part no.	Prices €
Sludge separator G1½	**40683**	
Accessories		
Reducer union kit G1 female	**40684**	
Reducer union kit G¾ female	**40685**	

Flow filters, combined air/flow filters

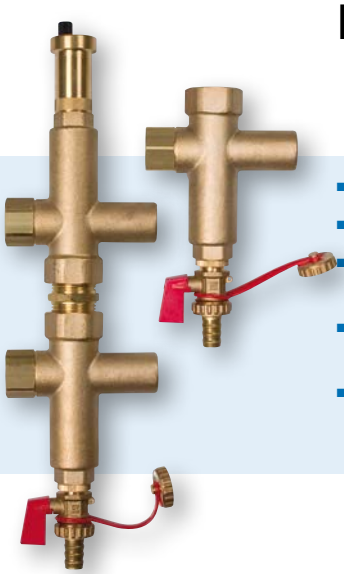

- Dirt particle separator
- Suitable for open and sealed circuits
- Flushing possible during operation of the system
- Cost savings due to fewer malfunctions and longer service life of the system
- Energy savings due to improved heat transfer at clean system components

Application

Flow filters and combined air/flow filters remove lime, rust, sludge, dirt and gas from heating systems to provide clean water and trouble-free operation. Suitable for hot water heating systems, underfloor heating systems, fuel cells and renovation of system components (sludge removal). Also suitable for removing lime particles in the circulation circuit of drinking water facilities.

Description

Most advanced heating systems use water for heat transmission. This water may also transport unwanted substances such as lime, calcium, magnesium, oxide, carbonates as well as larger particles such as welding or soldering residue, metal chips and dirt. These substances may cause malfunctions in fittings and control units. A compact flow filter (particle separator) removes these particles from the water. The particles settle in the collection chamber of the filter and can be flushed out via a valve with small amounts of water. Clean water supports trouble-free operation of systems and reduces the fuel and maintenance costs.

Clean system components have better thermal conduction, they provide for faster heating up and thus contribute to reduced fuel consumption and emissions.

The combined air/flow filter was developed for heating systems which are subject to problems caused by oxygen or other gases. The vent valve automatically removes the gases

In the case of drinking water systems, the flow filter is installed in the circulation circuit. Lime particles settle in the flow filter and can be flushed out. This reduces the deposits in pipes and fittings. Special materials which are suitable for drinking water are used for this application.

Technical specifications

Housing
Brass

Operating pressure
Max. 10 bar

Operating temperature range
Max. 95 °C

Dimensions (W x H x D)
Flow filter: 120 x 194 x 60 mm
Combined air/flow filter: 120 x 394 x 60 mm

Connections
Flow filter: Inlet G¾
Outlet G1
Combined air/flow filter: 2 x G¾

Scope of delivery
Flow filters and combined air/flow filters are delivered with form-fit insulation.

DG: G, PG: 2				Part no.	**Price €**
Flow filter – heating	28 kW	1	5	**78210**	
Flow filter – heating	50 kW	1	5	**78211**	
Combined air/flow filter – heating	28 kW	1	5	**78212**	
Combined air/flow filter – heating	50 kW	1	5	**78213**	
Flow filter – drinking water	---	1	5	**78214**	

Anti-tamper cap valves

High draining capacity for easy and fast draining

Anti-tamper cap valve with integrated boiler filling and drain valve KFE

Anti-tamper cap valve with drain valve

Application

For connection, maintenance and checks of diaphragm expansion vessels in heating systems as per EN 12828 and in solar systems. To be installed at the water inlet of the expansion vessel.

Description

Anti-tamper cap valve with screw connection G¾ x G¾ or G1 x G1. The shut-off valve is secured against inadvertent closing by means of a cap and a lead seal. The integrated boiler filling and drain valve KFE (connection: G¾ eurocone) allows for easy draining of the expansion vessel. For this purpose, a hose can be connected by means of a union nut. The expansion vessel can be shut off from the heating system and drained with a high draining capacity (time saving) via the drain valve for the required function check or for replacement.

Anti-tamper cap valve with screw connection G¾ x G¾ or G1 x G1. The shut-off valve is secured against inadvertent closing by means of a cap and a lead seal. Valve operation via standard square spanner AF 5 for radiator vent valves. The expansion vessel can be shut off from the heating system and drained via the drain valve for the required function test or for replacement.

Technical specifications

Operating pressure
Max. 10 bar

Operating temperature range
Operation: 0/120 °C

Drain capacity
Flow coefficient NS: 1.5 m³/h

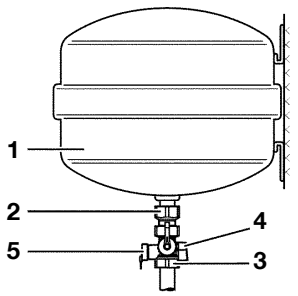

① Diaphragm expansion vessel
② Screw connection
③ Anti-tamper cap valve
④ Boiler filling and drain valve KFE, G¾ eurocone
⑤ Cap with seal and wire

Operating pressure
Max. 10 bar

Operating temperature range
Operation: 0/120 °C

Drain capacity
Flow coefficient NS: 0.5 m³/h

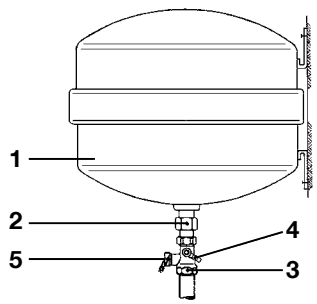

① Diaphragm expansion vessel
② Screw connection
③ Anti-tamper cap valve
④ Drain valve with hose connection
⑤ Cap with seal and wire

DG: G, PG: 2			Part no.	Price €
Anti-tamper cap valve G¾ x G¾ with integrated boiler filling and drain valve KFE G¾	1	25	77949	
Anti-tamper cap valve G1 x G1 with integrated boiler filling and drain valve KFE G¾	1	25	77950	
Anti-tamper cap valve G¾ x G¾ with drain cock	1	25	77924	
Anti-tamper cap valve G1 x G1 with drain cock	1	25	77934	

Diaphragm safety valves MS, MSM

- **For protection against overpressure in heating systems**
- **For water, water/glycol mixtures, liquids of fluid groups 1 and 2**
- **MSM with pressure gauge for indication of the system pressure**

MSM with pressure gauge for heating systems

Application

For sealed heating systems as per TRD 721; VdTÜV sheet Safety Valve 100 and 100/4 sheet 1; EN 12828. Also for water heating systems as per DIN 4751-2 with flow temperatures up to 120 °C and DIN 4751-3 with flow temperatures up to 95 °C. Suitable for water, water/glycol mixtures and liquids of fluid groups 1 and 2 (Pressure Equipment Directive, Art. 9).

Description

Safety valve with factory-adjusted opening pressure. MSM with pressure gauge for indicating the system pressure. The size of the valve inlet determines the unit type, the outlet is ¼" larger.

7

Technical specifications

Connection
See selection table

Operating temperature range
-20/+120 °C

Opening pressure
See selection table

Dimensions
W x H x D: 35 x 60 x 45 mm

Housing
Brass

Cap
PA6, red

Pressure gauge for heating installations (for MSM)
Diameter: 50 mm–G¼ back
Range: 0/4 bar
Connection: bottom back

DG: G, PG: 2	Maximum heating capacity	Opening pressure	Pressure gauge			Part no.	**Price €**
MS G½ x Rp¾	50 kW	2.5 bar	–	1	84	**42385**	
MS G½ x Rp¾	50 kW	3.0 bar	–	1	84	**42390**	
MS G¾ x Rp1	100 kW	2.5 bar	–	1	84	**42386**	
MS G¾ x Rp1	100 kW	3.0 bar	–	1	84	**42391**	
MS Rp1 x Rp1¼	200 kW	2.5 bar	–	1	-	42383	
MS Rp1 x Rp1¼	200 kW	3.0 bar	–	1	-	42378	
MS Rp1¼ x Rp1½	350 kW	3.0 bar	–	1	-	42495	
MSM Rp½ x Rp¾	50 kW	3.0 bar	0/4 bar	1	30	**42382**	

* Enquire for other pressure ratings and connections.

i
See pages 196, 272 for safety valves for solar liquid and drinking water.

Differential pressure bypass valves DÜ

- **For constant pump pressure in heating systems**
- **Reduction of flow noise**
- **With adjustment scale**
- **Differential pressure fully adjustable**
- **Either space-saving angled version or straight version**

Application

For keeping the pump pressure in sealed heating systems as per EN 12828 constant and for reducing flow noise in the heating system.

Description

Differential pressure bypass valve with directly readable adjustment scale. Housing made of brass. Available as straight version or angled version for space-saving installation.
The differential pressure in the heating system at full load is set directly at the bypass valve. If the volume flow is reduced, the valve opens to keep the head of the circulation pump constant.

7

Technical specifications

Operating temperature range
Max. 95 °C, (short-term 120 °C)

Operating pressure
Max. 6 bar

Differential pressure
Fully adjustable 0.1/0.5 bar

Housing
Angled version or straight version
Material: Brass

Connection angled version
Inlet: G¾ female thread
Outlet: Screw connection, flat-sealing with union nut G¾

Connection straight version
Screw connection at both sides, flat-sealing with union nut G¾

Differential pressure bypass valve angled version

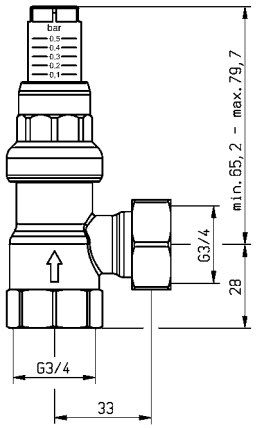

Differential pressure bypass valve straight version

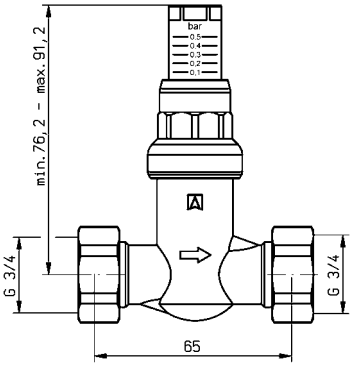

DG: G, PG: 2			Part no.	**Price €**
DÜ with screw connection, angled version	1	10	**42379**	
DÜ with screw connection, straight version	1	-	42384	

Filling and drain fittings

Filling fitting FAM

Filling fittings FA/FAM

Application

For sealed heating systems as per EN 12828.

Description

Filling fitting with housing and spring cap made of brass. Inlet for hose inside diameter 12 mm, outlet G½ female thread. With G¼ connection for pressure gauge for heating installations. With pressure reducer, shut-off valve and backflow preventer. Inlet pressure 6 up to 10 bar, outlet pressure adjustable between 0.5 and 3 bar.
Version FAM with pressure gauge for heating installations
Ø 63 mm, 0/4 bar, G¼ bottom.

Filling fitting FA

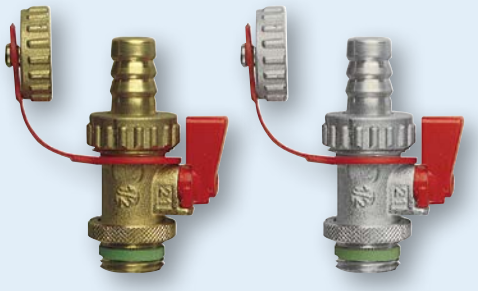

Boiler filling and drain valve KFE, brass plain

Boiler filling and drain valve KFE, brass nickel-plated

For sealed heating systems as per EN 12828.

Boiler filling and drain valve. Ball valve version made of brass. One side G½ male thread with PTFE sealing ring, other side ½" hose connector with G¾ union nut and blind cap with chain or strap. Available in plain brass (drinking water) or nickel-plated brass (heating circuit water).

7

DG: G, PG: 2			Part no.	**Price €**
Filling fitting FA	1	5	**42405**	
Filling fitting FAM	1	5	**42406**	
Boiler filling and drain valve KFE, brass plain, in cardboard box	12	72	**42401**	
Boiler filling and drain valve KFE, brass nickel-plated, in cardboard box	12	72	**42407**	

Flow meter DFM 10-1M

- **Direct indication of the flow rate in l/min**
- **Compact design**

Dimensions (mm)

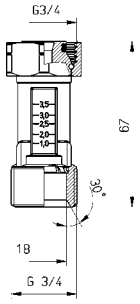

Application

For monitoring the flow in heating/cooling systems. Specially for direct mounting to heating circuit manifolds. Suitable for heating and cooling water as well as water mixtures with standard corrosion protection and antifreeze agents.

Description

Compact flow meter with scale. The flow meter can be installed in pipes in a horizontal, tilted or vertical position. The reading mark corresponds to the lower edge of the rotameter/float.

7

Technical specifications

Operating temperature range
Max. 100 °C

Operating pressure
Max. 10 bar

Measuring principle
Rotameter type with counter spring

Measuring range
1–3.5 l/min

Nominal diameter
DN 10

Housing
Brass

Connection
G¾ x G¾ (eurocone)
male thread x union nut

Mounting position
Horizontal, tilted or vertical

i Please enquire for other versions.

DG: G, PG: 2			Part no.	**Price €**
DFM 10-1M	-	10	**78619**	

Flow meters
DFM 15-2M / DFM 20-2M

- **Integrated ball valve for adjustment and shutting off**
- **Direct indication of the flow rate in l/min**
- **Adjustment without diagram, table or measuring instrument**
- **Available with numerous connection versions**

Application

For hydraulic balancing and flow monitoring in heating/cooling systems, air conditioning systems, solar systems and geothermal systems. DFM allows for fast hydraulic balancing of the system or of system components without diagrams, tables or measuring instruments. Suitable for heating and cooling water as well as water mixtures with standard corrosion protection and antifreeze agents.

Description

Compact flow meter with scale and ball valve for shutting off and adjustment. The flow meter can be installed in pipes in a horizontal, tilted or vertical position. Adjustments are made by means of a screwdriver via the adjustment screw. The reading mark corresponds to the lower edge of the rotameter/float.
Systems with correct hydraulic balancing provide for optimum energy distribution and cost-efficient operation.

7

Technical specifications

Operating temperature range
120 °C, short-term 160 °C

Operating pressure
Max. 10 bar

Measuring principle
Rotameter type with counter spring

Measuring range
See ordering table

Nominal diameter
DN 15, DN 20

Housing
Brass

System connections
G¾ x G¾, G1 x G1, G1¼ x G1¼
Male thread x male thread,
male thread x union nut

Mounting position
Horizontal, tilted or vertical

Options
- Other nominal diameters
- Other connections
- Other measuring ranges

Flow coefficients NS

Nominal diameter	Measuring range	Flow coefficient NS
DN 15	1–6 l/min	2.1 m^3/h
DN 15	2–12 l/min	3.0 m^3/h
DN 15	8–28 l/min	4.8 m^3/h
DN 15	8–38 l/min	5.9 m^3/h
DN 20	5–42 l/min	9.7 m^3/h
DN 20	20–70 l/min	12.9 m^3/h

i
Please enquire for other versions.

Flow meters DFM 15-2M/DFM 20-2M

Types and dimensions (mm)

A

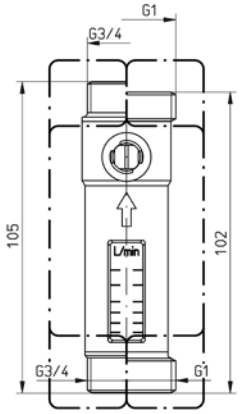

B

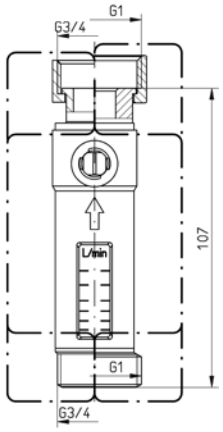

C

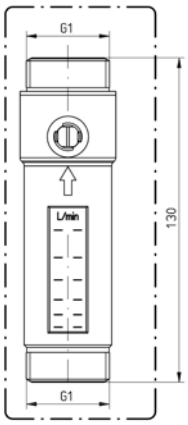

D

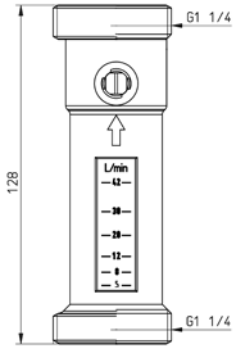

7

DG: G,
PG: 2

Male thread x male thread

Type	Nominal diameter	Connections	Measuring range	Part no.	Price €
DFM 15-2M					
A	DN 15	G¾ x G¾	1–6 l/min	80958	
	DN 15		2–12 l/min	**80963**	
	DN 15		8–28 l/min	80968	
	DN 15		8–38 l/min	80973	
	DN 15	G1 x G1	1–6 l/min	80959	
	DN 15		2–12 l/min	80964	
	DN 15		8–28 l/min	**80969**	
	DN 15		8–38 l/min	80974	
DFM 20-2M					
C	DN 20	G1 x G1	5–42 l/min	**80978**	
	DN 20		20–70 l/min	80983	
D	DN 20	G1¼ x G1¼	5–42 l/min	80979	
	DN 20		20–70 l/min	**80984**	

Male thread x union nut

Type	Nominal diameter	Connections	Measuring range	Part no.	Price €
DFM 15-2M					
B	DN 15	G¾ x G¾	1–6 l/min	80960	
	DN 15		2–12 l/min	80965	
	DN 15		8–28 l/min	80970	
	DN 15		8–38 l/min	80975	
	DN 15	G1 x G1	1–6 l/min	80961	
	DN 15		2–12 l/min	80966	
	DN 15		8–28 l/min	80971	
	DN 15		8–38 l/min	80976	

3-/4-way mixing valves ARV

- For distribution and mixing
- Compact design
- Rotary knob for precise adjustments
- Low torque for increased service life of actuator

Page 175

Application

Universal mixing application in water-based heating and cooling systems (radiators, panel heating systems). The 3-way mixer can also be used as a distribution or zone mixer. Suitable for water and water/glycol mixtures with up to 50 % glycol. Not suitable for drinking water.

Description

Compact, low-loss 3-way or 4-way mixing valves with brass base and easy-to-handle rotary knob made of high-strength plastic. The rotary knob with scale allows for easy and accurate manual adjustment of the mixing valve. The elevated mark allows for fast position determination. Two scales with "0 to 10" for horizontal installation and "10 to 0" for vertical installation are included for maximum flexibility.

3-way mixing valve for distribution and mixing: The desired flow temperature is obtained via the precise mixing ratio of hot boiler water and cold water from the return line.

4-way mixing valve for dual mixing. The return temperature to the boiler can be high in order to avoid corrosion damage, for example.

The mixing valves are easy to automate with the AFRISO ARM actuators. The low torque ensures a low load and a long service life.

Technical specifications

Angle of rotation
90°

Operating temperature range
Medium: -10 / +110 °C

Nominal pressure
Max. 10 bar

Flow rate
See ordering table

Leak rate
< 1.5 % flow coefficient NS

Required torque
DN 20 / DN 32: < 1 Nm
DN 40 / DN 50: < 2 Nm

Material
Housing: Brass (CW617N)
O rings: EPDM

DG: G, PG: 2	DN	Connection	Flow coefficient NS	Part no.	**Price €**
3-way mixing valve ARV 382	20	Rp ¾	6.3 m³/h	78234	
3-way mixing valve ARV 384	25	Rp 1	12 m³/h	78235	
3-way mixing valve ARV 385	32	Rp 1¼	15 m³/h	78236	
3-way mixing valve ARV 386	40	Rp 1½	26 m³/h	78237	
3-way mixing valve ARV 387	50	Rp 2	40 m³/h	78238	
4-way mixing valve ARV 484	25	Rp 1	12 m³/h	78239	
4-way mixing valve ARV 485	32	Rp 1¼	15 m³/h	78241	
4-way mixing valve ARV 486	40	Rp 1½	26 m³/h	78242	
4-way mixing valve ARV 487	50	Rp 2	40 m³/h	78243	

3-/4-way mixing valves ARV

Housing types and dimensions

3-way mixing valve DN 20, 25, 32

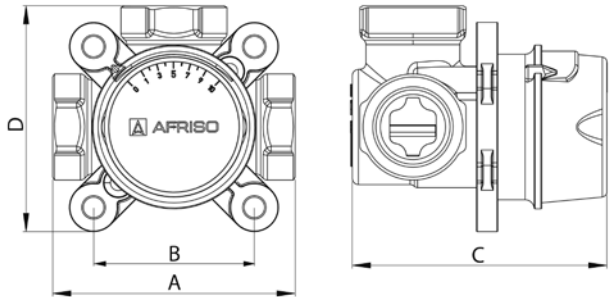

3-way mixing valve DN 40, 50

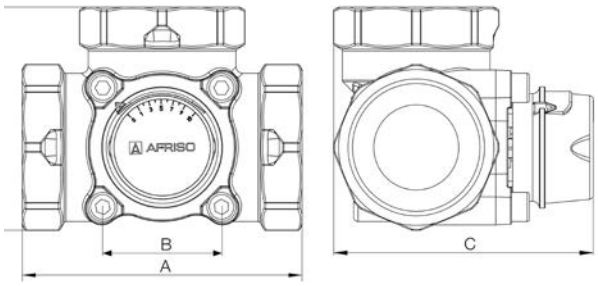

4-way mixing valve DN 25, 32

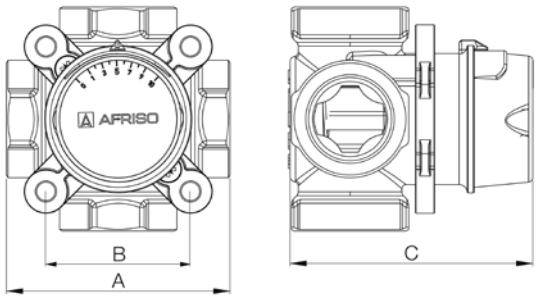

4-way mixing valve DN 40, 50

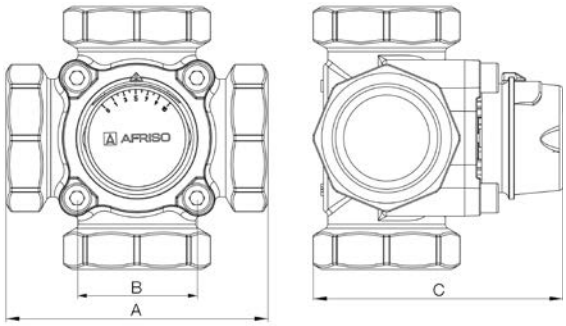

7

Dimensions (mm)

	DN	Connection (female thread)	A	B	C	D
ARV 382	20	Rp ¾	80	53	76.6	74.5
ARV 384	25	Rp 1	82	53	81.6	75.5
ARV 385	32	Rp 1¼	84	53	84.5	76.5
ARV 386	40	Rp 1½	116	53	100.5	92.5
ARV 387	50	Rp 2	125	53	106	99.5
ARV 484	25	Rp 1	82	53	81.6	-
ARV 485	32	Rp 1¼	84	53	83.5	-
ARV 486	40	Rp 1½	116	53	100.5	-
ARV 487	50	Rp 2	125	53	106	-

Actuator ARM

- **Rotary knob with scale**
- **Colour LEDs indicate direction of rotation**
- **Integrated protection unit**
- **Suitable for mixers of various manufacturers**

Application

Universal application for controlling mixing valves DN 20 to DN 50. Perfect solution for automated operation of water-based heating and cooling systems. Suitable for mixers from AFRISO, ESBE (except VRG), Seltron, Somatherm, Hora, WIP, PAW, LK, BRV, IMIT, IVAR, HOVAL and OLYMP. Please enquire for other mounting kits.

Description

Compact, silent actuator with an angle of rotation of 90°. Can be switched over from automatic mode to manual mode. A rotary knob with scale allows for fast and accurate manual adjustment of the mixing valve. Two yellow LEDs indicate the direction of rotation of the actuator, the red LED the switching state of the microswitch (ARM 443 only). Microswitch for controlling a pump. The pre-assembled connection cable with colour-coded wires simplifies installation. Two scales with "0 to 10" for horizontal installation and "10 to 0" for vertical installation are included for maximum flexibility. The integrated protection unit keeps the actuator and mixing valve from blocking for a long service life. A mounting kits allow for adaptation to mixers from a wide variety of manufacturers. ARM is maintenance-free.

Technical specifications

Angle of rotation
0/90°

Operating temperature range
Ambient: 0/50 °C

Cable length
2 m

Power input
AC 2.5/4 VA

Housing

Material:	Plastic (PC)
W x H x D:	84 x 102 x 89 mm
Protection class:	II
Degree of protection:	IP 42 (EN 60529)

ARM 323

Input signal:	3–point, digital
Supply voltage:	AC 230 V
Torque:	6 Nm
Running time:	60 s

ARM 343

Input signal:	3–point, digital
Supply voltage:	AC 230 V
Torque:	6 Nm
Running time:	120 s

ARM 443

Input signal:	3–point, digital
Output:	Microswitch
Supply voltage:	AC 230 V
Torque:	6 Nm
Running time:	120 s

ARM 994:

Input signal:	0–10 V, 2–0 V 0–20 mA, 4–20 mA analogue
Supply voltage:	AC/DC 24 V
Torque:	10 Nm
Running time:	Adjustable 60/90/120 s

Scope of delivery
Actuator with mounting kit for mixers from AFRISO, ESBE (except VRG series), Seltron, Somatherm, Hora, WIP, PAW, LK, BRV, IMIT, IVAR, HOVAL, OLYMP

Options
- 2-point signal control
- Mounting kits: ESBE VRG series
  Siemens VBI/VBF series
  Centra DR/ZR series
  Contra DRU series
  Meibes (all mixers)
  PAW (short axis)
  Honeywell V5442/V5433 series

DG: G, PG: 4	Inlet	Microswitch	Term	Torque	Part no.	**Price €**
ARM 323, 230 V	3-point signal	-	60 s	6 Nm	78205	
ARM 343, 230 V	3-point signal	-	120 s	6 Nm	**78208**	
ARM 443, 230 V	3-point signal	X	120 s	6 Nm	78215	
ARM 994, 24 V	0–10 V, 2–10 V, 0–20 mA, 4–20 mA	-	60/90/120 s	10 Nm	78233	

Boiler manifolds for heating pump assemblies PrimoTherm®

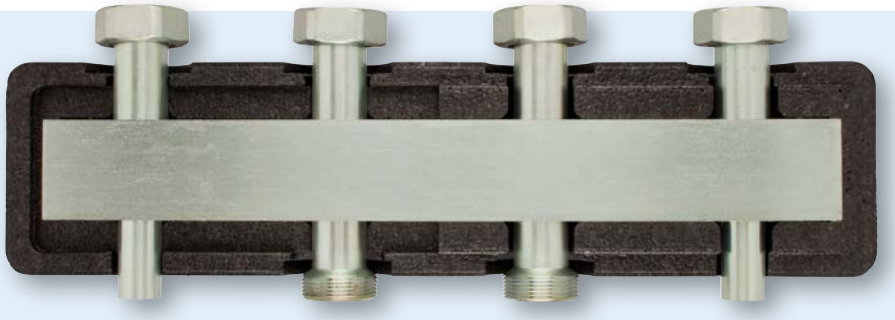
KSV 125-2

Wall mounting bracket

Application

For distribution of the heating circuit water in sealed heating systems as per EN 12828 from the boiler to the heating pump assemblies PrimoTherm®.

KSV 125-2/3

Description

Boiler manifold as combination supply and return manifold for two or three heating pump assemblies. Connection to boiler via G1½ threaded sockets, bottom. Connection to heating pump assembly via flat-sealing union nut G1½. AFRISO boiler manifolds are tightness-tested in the factory. The insulation is also used to package the product for safe transport.

Technical specifications

System connections
Boiler side: Threaded socket G1½
Pump assembly: Union nut G1½, flat-sealing

Axis distance
125 mm

Operating temperature range
Medium: Max. 110 °C

Flow
3.0 m^3/h

System pressure
Max. 4 bar

Insulation
Polypropylene EPP

Scope of delivery
Boiler manifold with 2 x wall mounting bracket and insulation

KSV 125-2/3 HW

Boiler manifold as combination supply and return manifold for two or three heating pump assemblies. With integrated hydraulic separator for separation of circuits. Connection to boiler via G1½ threaded sockets, bottom, two connections G½ for drain/temperature probe. Connection to heating pump assembly via flat-sealing union nut G1½. AFRISO boiler manifolds are tightness-tested in the factory. The insulation is also used to package the product for safe transport.

System connections
Boiler side: Threaded socket G1½
Pump assembly: Union nut G1½, flat-sealing

Axis distance
125 mm

Operating temperature range
Medium: Max. 110 °C

Flow
3.0 m^3/h

System pressure
Max. 4 bar

Insulation
Polypropylene EPP

Scope of delivery
Boiler manifold with 2 x wall mounting bracket and insulation

DG: G, PG: 3	Heating circuits	Hydraulic separator	Part no.	Price €
KSV 125-2	2	No	**77608**	
KSV 125-3	3	No	**77609**	
KSV 125-2 HW	2	Yes	**77621**	
KSV 125-3 HW	3	Yes	**77622**	

Heating pump assembly PrimoTherm® 180 DN 25

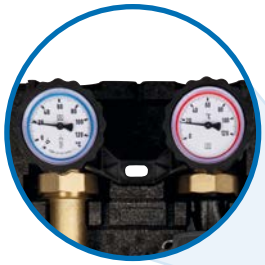

Combination valves with thermometer in the hand wheel, range 0/120 °C. Red/blue marking for easy identification of flow and return lines and function checks by owner.

System connection G1 female for rapid mounting in the heating circuit.

Integrated adjustable gravity brake.

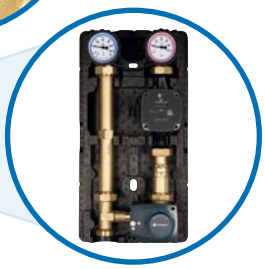

Pre-assembled, tightness-tested and heat-insulated assembly.

Modular system with pump and return line left or right.

Class A high energy efficiency pump

Sophisticated wall mounting kit for easy, fast installation.

Virtually any standard pump can be installed without reworking of the insulation

System connection G1½ male for fast mounting to the boiler supply/return by means of flange and union nut. Suitable for KSV.

Cable routing in the insulation for professional installation of pump and actuator cables.

High-grade, robust mixer with pre-adjustable bypass for maximum reliability.

Overview of versions
Heating pump assemblies PrimoTherm® 180

	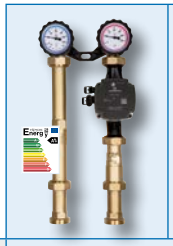	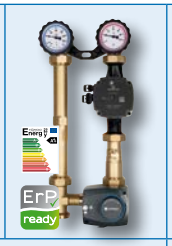			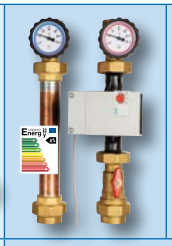	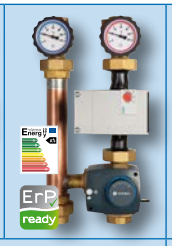	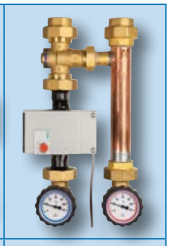
Nominal size	**DN 25**				**DN 32**		
Version	**180-1 Direct**	**180-2 3-way mixer**	**180-3 Fixed value mixing valve**	**RTA 60**	**180-1 Direct**	**180-2 3-way mixer**	**180-3 Fixed value mixing valve**
Without circulation pump	•	•	•		•	•	•
With Grundfos UPM3 HYBRID 25–70/180	•	•					
With Wilo YONOS Para 25/6 RKC		•	•	•			
With Wilo STRATOS Para 30 1-7 r. K.					•	•	•
Return temperature increase (RTA)		•	•	•		•	

Description The heating pump assembly PrimoTherm® excels with its versatility and great number of possible combinations. The system assembly for the heating circuit is pre-assembled, tightness-tested, heat-insulated and available in three versions and two sizes, each with or without high energy efficiency pump. All circulation pumps offered by AFRISO meet the requirements of the European Ecodesign Directive (stage 2 as of 2015). The universal insulation allows for the installation of virtually any standard pump without reworking of the insulation. In addition, the system is modular so that the flow line can be mounted at the left or the right side; due to the slim design, it is also possible to mount several pump assemblies next to each other on AFRISO boiler manifolds. In addition, each pump assembly comprises a fastening kit for wall mounting in any position. All PrimoTherm® heating pump assemblies feature a gravity brake to avoid incorrect circulation.The DN 25 versions have the brake in the combination valve; it can be deactivated for servicing. It is also possible to mount temperature probes in the combination valve.

The versions **PrimoTherm® 180-1 DN 25 and 32** are used in non-mixed heating circuits, specially for storage tank charging.

The versions **PrimoTherm® 180-2 DN 25 and 32** are used in mixed heating circuits. With the 3-way mixer and the actuator, the flow temperature can be adjusted to a desired temperature by adding water from the return. PrimoTherm® 180-2 can also be used to increase the return temperature with solid fuel burners which have a controller for increasing the return temperature. The opening temperature must be set at this controller.

i

We provide a great variety of customer-specific pump assemblies for OEMs. Please enquire.

The versions **PrimoTherm® 180-3 DN 25 and 32** automatically control the return temperature of the system water to the heat generator to the value adjusted in the valve. The integrated condensation protection valve is the connection between the solid fuel heating system or the buffer storage.

i

See the operating instructions of the pump assemblies for additional details, www.afriso.com/betriebsanleitungen

Heating pump assembly PrimoTherm® 180-1 DN 25

- **Pre-assembled, tightness-tested and heat-insulated assembly**
- **Modular system with flow at left or right**
- **Easy and fast installation**
- **With high-efficiency pump class A**

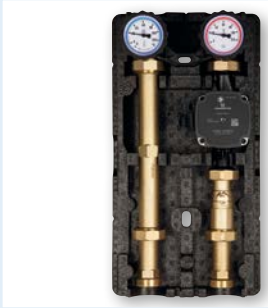

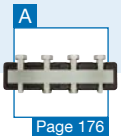

Page 176

Application

Heating pump assembly for use in non-mixed heating circuits, specially for storage tank charging. It connects the heating boiler and the pipe system.

Description

Complete, pre-assembled and tightness-tested heating pump assembly with all required functional components, form-fit insulation and wall mounting unit.

The pump line (flow/hot) consists of:
- Combination valve with thermometer in the hand wheel (red mark, range 0/120 °C)
- Ball valve below the pump
- Pipe for length compensation with screw connection
- System connection G1½ male (boiler), G1 female (heating circuit)
- Suitable for pumps DN 25 with G1½ x 180 mm.

The return line consists of:
- Combination valve with gravity brake, thermometer in the handle (blue mark, range 0/120 °C)
- Pipe for length compensation (pump/mixer) with screw connection
- System connection G1½ male (boiler), G1 female (heating circuit)

Technical specifications

Axis distance
125 mm

System connections
Boiler G1½ male, heating circuit G1 female

Operating temperature range
Medium: T_{max} = 110 °C

System pressure
Max. 10 bar

Flow coefficient NS
4.8 m^3/h

Insulation
Polypropylene EPP

Dimensions
W x H x D: 250 x 475 x 152 mm

Technical specifications circulation pump

Grundfos UPM3 HYBRID 25–70/180

Length
180 mm

Degree of protection
IP 44

Supply voltage
AC 230 V, 50 Hz

Energy efficiency class
A

Power input
2–52 W

Operating modes/settings
Proportional pressure (3), constant pressure (3), constant speed of rotation (4), AutoAdapt PP (1), AutoAdapt CP (1), PWM A (3), PWM C (3), on-off commutation (P1/Flow)

Options

- Mixer and actuator, can be retrofitted
- Other circulation pumps

Heating pump assembly PrimoTherm® 180-1 DN 25

Dimensions (mm)

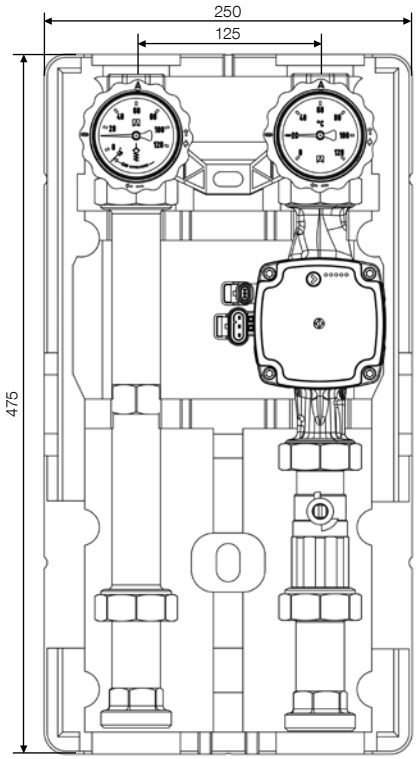

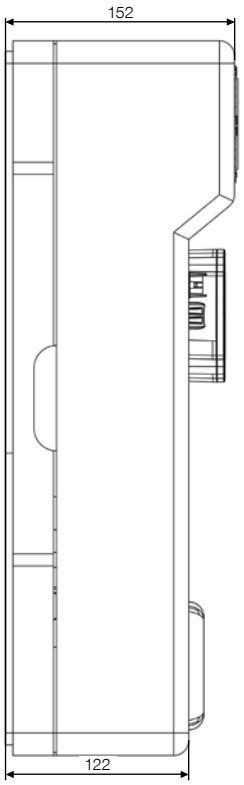

DG: G, PG: 2	Pump	Part no.	**Price €**
PrimoTherm® 180-1 DN 25 OM OP G1½ male x G1 female	Without pump	**77643**	
PrimoTherm® 180-1 DN 25 OM GP05 G1½ x G1 female	With Grundfos UPM3 HYBRID 25-70/180	**77645**	

Accessories and spare parts	Specification	Part no.	**Price €**
Connection kit G1½ female thread x 1 female thread	2 x connection piece G1 female thread, 2 x union nut G1½ female thread, 2 x flat gasket	77612	
Connection kit G1½ male thread x 1 male thread	2 x O ring ø 28 x 2.5 mm 2 x reducer G1½ male thread x 1 male thread	77613	
3-way mixer with T piece KV 10	Axis distance 125 mm	77589	

Heating pump assembly PrimoTherm® 180-2 DN 25

- **Pre-assembled, tightness-tested and heat-insulated assembly**
- **High-grade, robust mixer**
- **Virtually any standard pump can be installed without reworking of the insulation**
- **Easy and fast installation:**
  - **Sophisticated wall mounting kit**
  - **Cable routing integrated in insulation**

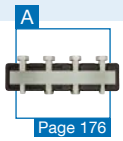

Page 176

Application

Heating pump assembly for use in mixed heating circuits. With the 3-way mixer and the actuator, the flow temperature can be adjusted to a desired temperature by adding water from the return. It connects the heating boiler and the pipe system. PrimoTherm® 180-2 is also available as version RTA. It can be used to increase the return temperature with solid fuel burners which have a controller for increasing the return temperature. The opening temperature must be set at this controller.

Description

Complete, pre-assembled and tightness-tested heating pump assembly with all required functional components, form-fit insulation.

The pump line (flow/hot) consists of:
- Combination valve with thermometer in the hand wheel (red mark, range 0/120 °C)
- Ball valve below the pump
- 3-way mixer KVS 10 with actuator ARM 343
- System connection G1½ male (boiler), G1 female (heating circuit)

Suitable for pumps DN 25 with G1½ x 180 mm.

The return line consists of:
- Combination valve with gravity brake, thermometer in the handle (blue mark, range 0/120 °C)
- Pipe for length compensation with screw connection
- T piece for mixer connection
- System connection G1½ male (boiler), G1 female (heating circuit)

Difference version RTA
- Interchanged colour codes of thermometers
- System connection (storage) with additional connection flanges G1 female
- Additional mounting bracket for upside down or lateral mounting
- High-efficiency pump WILO YONOS Para 25/6 RKC available

Technical specifications

Axis distance
125 mm

System connections
Boiler G1½ male, heating circuit G1 female

Operating temperature range
Medium: T_{max} = 110 °C

System pressure
Max. 10 bar

Flow coefficient NS
4.8 m^3/h

Insulation
Polypropylene EPP

Dimensions
W x H x D: 250 x 475 x 152 mm

Options

- Other circulation pumps

Heating pump assembly PrimoTherm® 180-2 DN 25

Dimensions (mm)

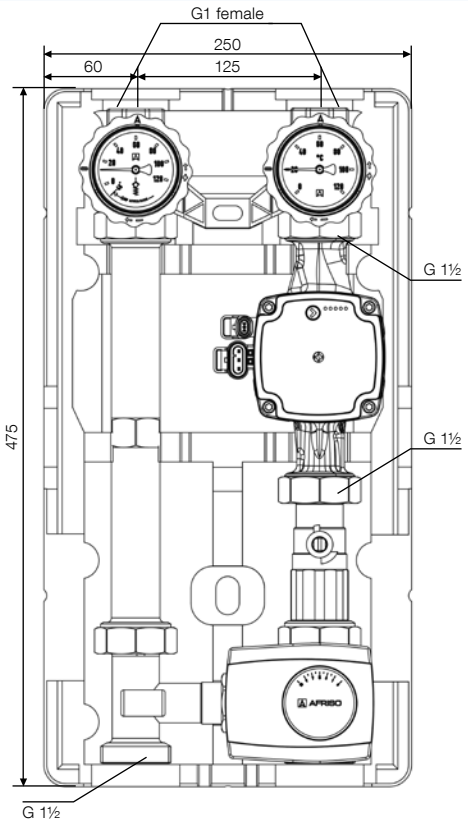

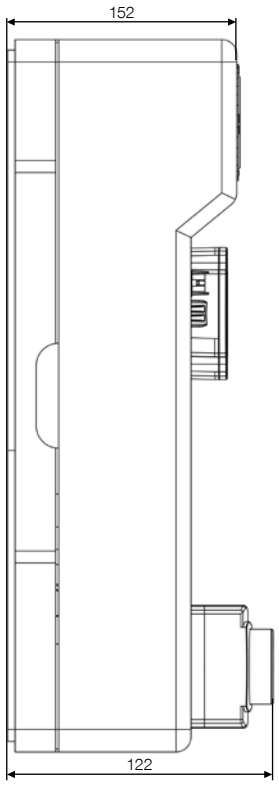

Technical specifications circulation pump

Grundfos UPM3 HYBRID 25–70/180

Length
180 mm

Degree of protection
IP 44

Supply voltage
AC 230 V, 50 Hz

Energy efficiency class
A

Power input
2–52 W

Operating modes/settings
Proportional pressure (3), constant pressure (3), constant speed of rotation (4), AutoAdapt PP (1), AutoAdapt CP (1), PWM A (3), PWM C (3), on-off commutation (P1/Flow)

DG: G, PG: 2	Pump	Part no.	**Price €**
PrimoTherm® 180-2 DN 25 3WM-SM OP G1½ male x G1 female	Without pump	**77615**	
PrimoTherm® 180-2 DN 25 3WM-SM GP04 G1½ x G1 female	With Grundfos UPM3 HYBRID 25–70/180	**77641**	
Versions RTA:			
PrimoTherm® 180-2 DN 25 RTA 3WM-SM OP G1 female x G1 female	Without pump	**77541**	
PrimoTherm® 180-2 DN 25 RTA 3WM-SM GP01 G1 female x G1 female	With Grundfos UPM3 HYBRID 25–70/180	**77542**	
PrimoTherm® 180-2 DN 25 RTA 3WM-SM WP02 G1 female x G1 female	With WILO YONOS PARA 25/6 RKC	**77543**	

Accessories and spare parts	Specification	Part no.	**Price €**
Connection kit G1½ female thread x 1 female thread	2 x connection piece G1 female thread, 2 x union nut G1½ female thread, 2 x flat gasket	77612	
Connection kit G1½ male thread x 1 male thread	2 x O ring ø 28 x 2.5 mm 2 x reducer G1½ male thread x 1 male thread	77613	
3-way mixer with T piece KV 10	Axis distance 125 mm	77589	

Heating pump assembly PrimoTherm® 180-3 DN 25 RTA

- **For increased return temperature with solid fuel boilers**
- **With temperature-controlled condensation protection valve**
- **For reduced amounts of condensate in the combustion process**
- **Avoids deposits in the boiler and in the smoke vent**

Application

Heating pump assembly for automatically controlling the return temperature of the system water to the heat generator to the value adjusted in the valve. An integrated, temperature-controlled condensation protection valve is the connection between the solid fuel heating system or the hot water storage tank. Using PrimoTherm® 180-3 RTA keeps the temperature in the heating boiler above the condensation point in all operating states. This avoids deposits in the boiler and in the smoke vent and increases the service life of the system; corrosion damage of the heating boiler and chimney fires caused by soot deposits are avoided.

Description

Complete, pre-assembled and tightness-tested heating pump assembly with all required functional components, form-fit insulation and wall mounting unit. With an additional mounting bracket, the unit can be mounted in any position (vertically/horizontally).

The pump line (return) consists of:
- Combination valve with thermometer in the hand wheel (blue mark, range 0/120 °C)
- Ball valve above the pump
- 3-way mixing valve with fixed mixing temperature 60 °C
- System connection G1 female (boiler), G1 female (storage)

Suitable for pumps DN 25 with G1½ x 180 mm.

The flow line (hot) consists of:
- Combination valve with gravity brake, thermometer in the handle (red mark, range 0/120 °C)
- Pipe for length compensation with screw connection
- System connection G1 female (boiler), G1 female (storage)

Function principle

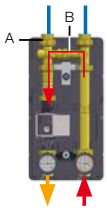

Start mode (heating up of boiler):
When the boiler heats up, the condensation protection valve is fully closed in the direction of the consumer. The liquid coming from the boiler is recirculated in the small circuit via the bypass, which causes the boiler temperature to increase more rapidly.

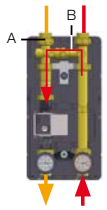

Transition phase:
When the opening temperature is reached (60 °C), the circuit to the consumer is opened proportionally and the bypass is reduced accordingly. However, the boiler temperature will not drop below the set temperature.

Regular operation:
During further operation, the temperature increases until the condensation protection valve is fully open (return storage A). The bypass (B) is closed correspondingly. If the inlet temperature (return storage A) drops to approx 10 °C above the set opening temperature, the admixture via the bypass (B) is increased proportionally and outlet A is closed proportionally.

Heating pump assembly PrimoTherm® 180-3 DN 25 RTA

Technical specifications

Axis distance
125 mm

System connections
G1 female thread at both ends

Operating temperature range
Medium: T_{max} 100 °C

System pressure
Max. 10 bar

Opening temperatures
60 °C (fixed values)

Nominal size
DN 25

System capacity
Max. 32 kW at a flow rate of 1,400 l/h and a temperature spread of Δt 20 K

Leak rate
Water-tight between connections A->AB, 3 % leak rate of flow coefficient NS between B->AB
PN 10. A-AB = Flow coefficient NS: 2.94; B-AB = 2.12

Insulation
Polypropylene EPP

Technical specifications circulation pump

WILO YONOS PARA 25/6 RKC

Length
180 mm

Supply voltage
AC 230 V, 50 Hz

Energy efficiency class
A

Power input
3–45 W

Pumping head/rate
Max. 6.2 m / max. volume flow 3.3 m³/h

Options

- Other opening temperatures
- Other circulation pumps

7

Dimensions (mm)

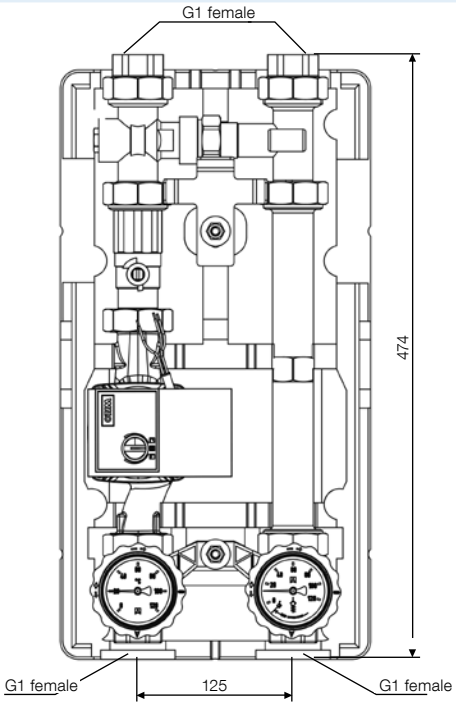

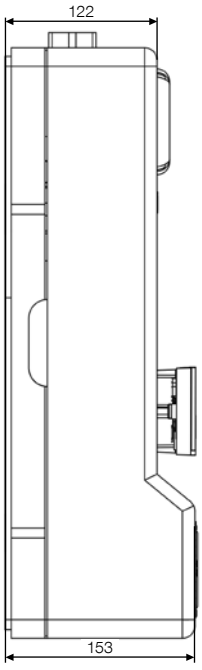

DG: G, PG: 2	Opening temperature	Pump	Part no.	Price €
PrimoTherm® 180-3 DN 25 RTA 60 OP G1 female x G1 female	60 °C	Without pump	**77576**	
PrimoTherm® 180-3 DN 25 RTA 45 OP G1 female x G1 female	45 °C	Without pump	77577	
PrimoTherm® 180-3 DN 25 RTA 55 OP G1 female x G1 female	55 °C	Without pump	77578	
PrimoTherm® 180-3 DN 25 RTA 60 WPO1 G1 female x G1 female	60 °C	WILO YONOS PARA 25/6 RKC	77570	
PrimoTherm® 180-3 DN 25 RTA 45 WPO1 G1 female x G1 female	45 °C	WILO YONOS PARA 25/6 RKC	77571	
PrimoTherm® 180-3 DN 25 RTA 55 WPO1 G1 female x G1 female	55 °C	WILO YONOS PARA 25/6 RKC	77572	

Charging unit RTA 60 DN 25 WP03 G1

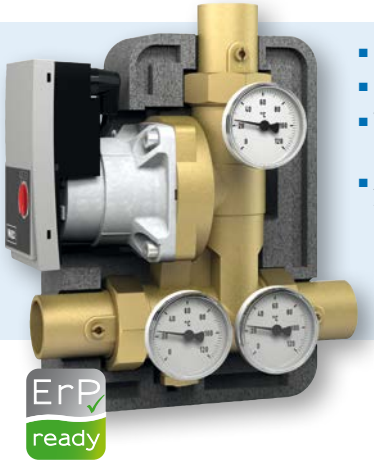

- **For charging the storage of solid fuel boilers**
- **Compact unit for limited space conditions**
- **With temperature-controlled condensation protection valve**
- **Avoids deposits in the boiler and in the smoke vent**

Application

Charging unit for direct connection between a solid fuel boiler and a heating system or a buffer storage. The compact design allows for mounting to the pipes between the solid fuel boiler and the storage even if space is limited. Using the charging unit RTA 60 DN 25 WP03 G1 RTA keeps the temperature in the heating boiler above the condensation point in all operating states. This avoids deposits in the boiler and in the smoke vent and increases the efficiency and the service life of the system. The risk of corrosion damage to the boiler and chimney fires resulting from soot deposits is reduced.

Description

Complete, pre-assembled and tightness-tested charging unit with all required functional components. The compact insulation contains a central carrier with a high energy efficiency pump. The probe systems of the three thermometers held by the insulation are in the corresponding receptacles of the carrier after mounting. The thermal condensation protection valve and a check valve that can be shut off are contained inside the carrier. Ball valves with connection threads G1 female are screwed to the three system connections.

Function principle

Start mode (heating up of boiler)
When the boiler heats up, the condensation protection valve is fully closed in the direction of the consumer. The liquid coming from the boiler is recirculated in the small circuit via the bypass, which causes the boiler temperature to increase more rapidly.

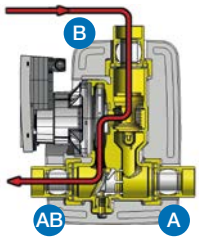

Transition phase
When the opening temperature is reached (60 °C), the circuit to the consumer is opened proportionally and the bypass is reduced accordingly. The boiler temperature increases and heat is provided to the consumer; however, the return temperature will not fall below the set temperature.

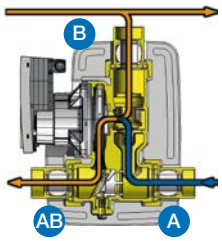

Regular operation
During further operation, the temperature increases until the condensation protection valve is fully open (return storage A). The bypass (B) is closed correspondingly. If the inlet temperature (return storage A) drops to approx 10 °C above the set opening temperature (e.g. 65 °C), the admixture via the bypass (B) is increased proportionally and outlet A is closed proportionally.

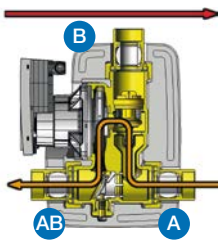

Charging unit RTA 60 DN 25 WP03 G1

Technical specifications

System connections
G1 female thread

Operating temperature range
Medium: T_{max} 100 °C

System pressure
Max. 6 bar

System capacity
Max. 60 kW at a flow rate of 2,600 l/h and a temperature spread of Δt 20 K

Insulation
Polypropylene EPP

Dimensions (mm)

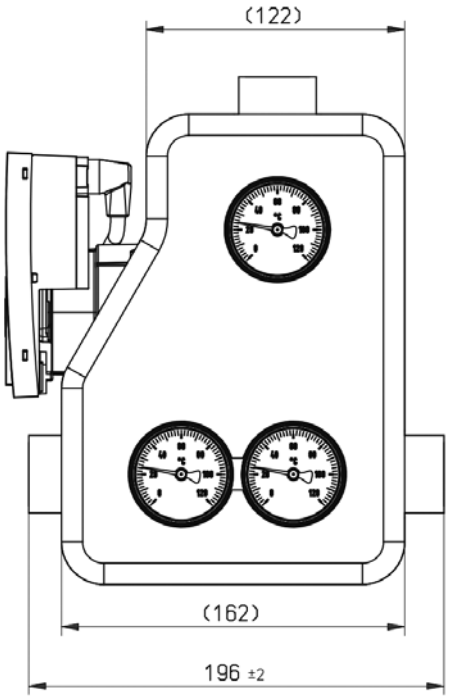

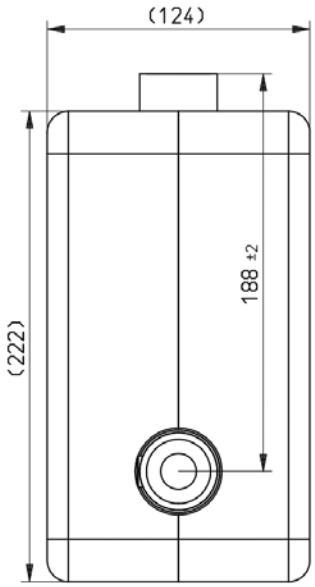

DG: G, PG: 2	Opening temperature	Pump	Part no.	**Price €**
Charging unit RTA 60 DN 25 WP 03 G1	60 °C	WILO YONOS PARA RS/7.5-RKC	77548	
Charging unit RTA 55 DN 25 WP 03 G1	55 °C	WILO YONOS PARA RS/7.5-RKC	77547	
Charging unit RTA 45 DN 25 WP 03 G1	45 °C	WILO YONOS PARA RS/7.5-RKC	77546	

Heating pump assembly PrimoTherm® 180-1 DN 32

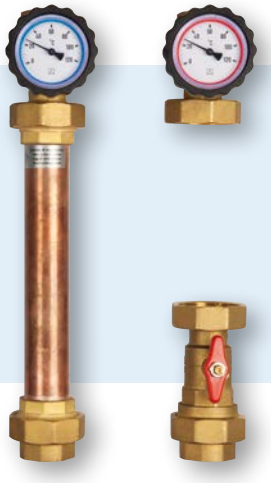

- **Pre-assembled, tightness-tested and heat-insulated assembly**
- **Compact design**
- **Available with high energy efficiency pump class A**
- **Easy and fast installation**

Application

Heating pump assembly for non-mixed heating circuits, specially for storage tank charging. It connects the heating boiler and the pipe system.

Description

Complete, pre-assembled and tightness-tested heating pump assembly with all required functional components, form-fit insulation and wall mounting unit.

The pump line (flow/hot) consists of:
- Combination valve with thermometer in the hand wheel (red mark, range 0/120 °C)
- Ball valve below the pump
- System connection G2 male (boiler) and additional screw connections G1¼ female x G1¼ female (heating circuit)

Suitable for pumps DN 32 with G2 x 180 mm.

The return line consists of:
- Combination valve, thermometer in the hand wheel (blue mark, range 0/120 °C)
- Pipe for length compensation with gravity brake and screw connection
- System connection G2 male (boiler) and additional screw connections G1¼ female x G1¼ female (heating circuit)

Technical specifications

Axis distance
125 mm

System connections
Boiler G1¼ female
Heating circuit G1¼ female

Operating temperature range
Medium: T_{max} 110 °C

System pressure
Max. 10 bar (observe maximum pressure of circulation pumps used)

Circulation pump
WILO STRATOS PARA 30/1-7 r. K.

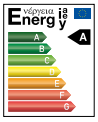

Length
180 mm

Degree of protection
IP 44

Supply voltage
AC 230 V, 50 Hz

Nominal size
DN 32

Flow coefficient NS
21.0 m³/h

Insulation
Polypropylene EPP

Power input
5–70 W

Pumping head/rate
7 m / 4.5 m³/h

Control
Constant differential pressure
Constant volume flow

DG: G, PG: 2	Pump	Part no.	**Price €**
PrimoTherm® 180-1 DN 32 OM OP G1¼ female thread	Without pump	77550	
PrimoTherm® 180-1 DN 32 OM WP02 G1¼ female thread	WILO STRATOS PARA 30/1-7 r. K.	77551	

Heating pump assembly PrimoTherm® 180-1 DN 32

Dimensions (mm)

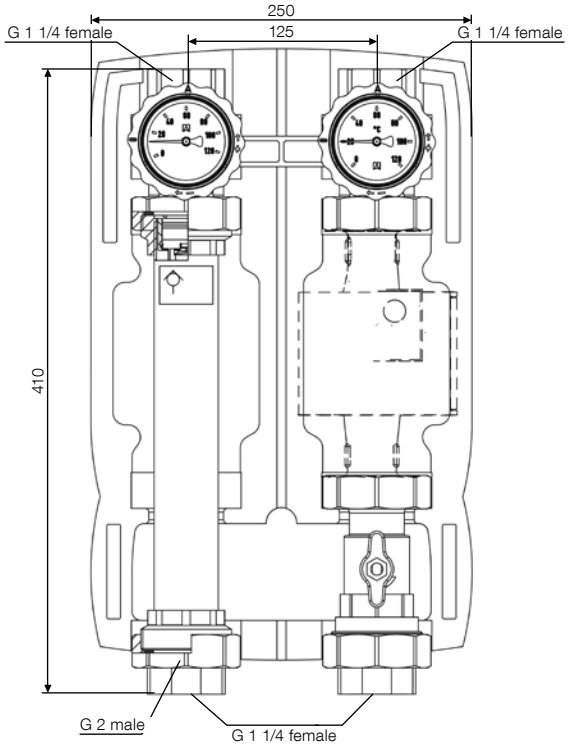

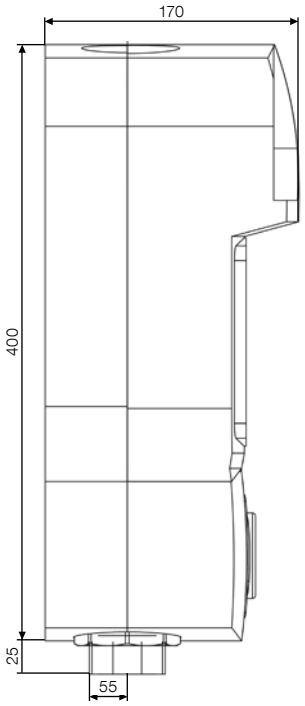

Heating pump assembly PrimoTherm® 180-2 DN 32

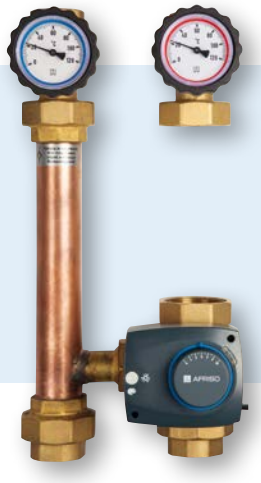

- **Pre-assembled, tightness-tested and heat-insulated assembly**
- **Compact design**
- **Available with high energy efficiency pumps class A and high-grade, robust mixer as well as actuator**
- **Easy and fast installation**

Application

Heating pump assembly for mixed heating circuits. It connects the heating boiler and the pipe system. With the 3-way mixer and the actuator, the flow temperature can be adjusted to a desired temperature by adding water from the return.
PrimoTherm® 180-2 is also available as version RTA. It can be used to increase the return temperature with solid fuel burners which have a controller for increasing the return temperature. The opening temperature must be set at this controller.

Description

Complete, pre-assembled and tightness-tested heating pump assembly with all required functional components, form-fit insulation and wall mounting unit.

The pump line (flow/hot) consists of:
- Combination valve with thermometer in the hand wheel (red mark, range 0/120 °C)
- 3-way mixer KVS 16 with actuator ARM 343
- System connection G2 male (boiler) and additional screw connections G1¼ female x G1¼ female (heating circuit)

Suitable for pumps DN 32 with G2 x 180 mm.

The return line consists of:
- Combination valve, thermometer in the hand wheel (blue mark, range 0/120 °C)
- Pipe for length compensation with gravity brake and screw connection
- System connection G2 male (boiler) and additional screw connections G1¼ female x G1¼ female (heating circuit)

Technical specifications

Axis distance
125 mm

System connections
Boiler G1¼ female
Heating circuit G1¼ female

Operating temperature range
Medium: T_{max} 110 °C

System pressure
Max. 10 bar (observe maximum pressure of circulation pumps used)

Nominal size
DN 32

Flow coefficient NS
13.0 m³/h

Insulation
Polypropylene EPP

Options

- High-efficiency pump WILO STRATOS Para 30 1-7 r. K.
- Other circulation pumps
- Mixer reduction kits for flow coefficient NS 12.5, 10 and 6.3 m³/h

DG: G, PG: 2	Pump	Part no.	**Price €**
PrimoTherm® 180-2 DN 32 3WM-SM OP G1¼ female thread	Without pump	77553	
PrimoTherm® 180-2 DN 32 3WM-SM WP02 G1¼ female thread	WILO STRATOS PARA 30/1-7 r. K.	**77554**	

Heating pump assembly PrimoTherm® 180-2 DN 32

Dimensions (mm)

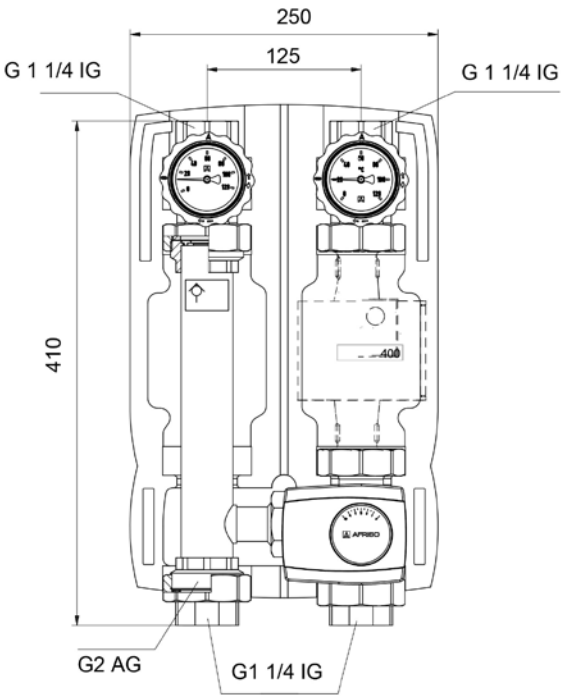

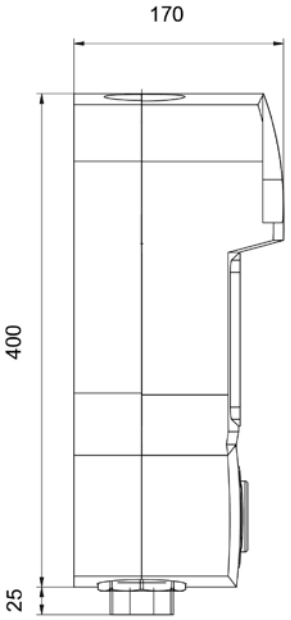

Heating pump assembly PrimoTherm® 180-3 DN 32 RTA

- **For increased return temperature with solid fuel boilers**
- **With temperature-controlled condensation protection valve**
- **For reduced amounts of condensate in the combustion process**
- **Avoids deposits in the boiler and in the smoke vent**

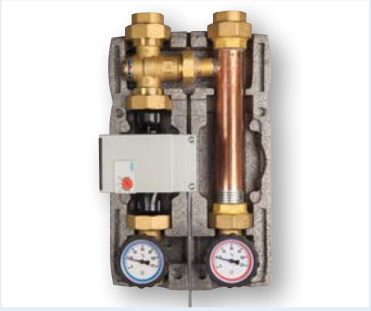

Application

Heating pump assembly for automatically controlling the return temperature of the system water to the heat generator to the value adjusted in the valve. An integrated, temperature-controlled condensation protection valve is the connection between the solid fuel heating system or the hot water storage tank. Using PrimoTherm® 180-3 RTA keeps the temperature in the heating boiler above the condensation point in all operating states. This avoids deposits in the boiler and in the smoke vent and increases the service life of the system; corrosion damage of the heating boiler and chimney fires caused by soot deposits are avoided.

Description

Complete, pre-assembled and tightness-tested heating pump assembly with all required functional components, form-fit insulation and wall mounting unit.

The pump line (return) consists of:
- Combination valve with thermometer in the hand wheel (blue mark, range 0/120 °C)
- Ball valve above the pump
- 3-way mixing valve with fixed mixing temperature 60 °C
- System connection G1¼ female (boiler), G1¼ female (storage)

Suitable for pumps DN 32 with G2 x 180 mm.

The flow line (hot) consists of:
- Combination valve with gravity brake, thermometer in the handle (red mark, range 0/120 °C)
- Pipe for length compensation with gravity brake and screw connection

Function principle

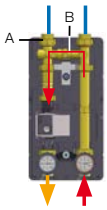

Start mode (heating up of boiler):
When the boiler heats up, the condensation protection valve is fully closed in the direction of the consumer. The liquid coming from the boiler is recirculated in the small circuit via the bypass, which causes the boiler temperature to increase more rapidly.

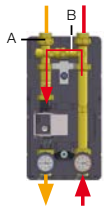

Transition phase:
When the opening temperature is reached (60 °C), the circuit to the consumer is opened proportionally and the bypass is reduced accordingly. However, the boiler temperature will not drop below the set temperature.

Regular operation:
During further operation, the temperature increases until the condensation protection valve is fully open (return storage A). The bypass (B) is closed correspondingly. If the inlet temperature (return storage A) drops to approx 10 °C above the set opening temperature, the admixture via the bypass (B) is increased proportionally and outlet A is closed proportionally.

Heating pump assembly PrimoTherm® 180-3 DN 32 RTA

Technical specifications

Axis distance
125 mm

System connections
G1¼ female thread at both ends

Operating temperature range
Medium: T_{max} 110 °C

System pressure
Max. 10 bar

Opening temperatures
60 °C (fixed values)

Nominal size
DN 32

System capacity
Max. 93 kW at a flow rate of 4,000 l/h and a temperature spread of Δt 20 K

Leak rate
Water-tight between connections A->AB,
3 % leak rate of flow coefficient NS between B->AB
A-AB = Flow coefficient NS: 7.2; B-AB = 4.8

Insulation
Polypropylene EPP

Technical specifications circulation pump

WILO STRATOS PARA 30/1-7 r. K.

Length
180 mm

Supply voltage
AC 230 V, 50 Hz

Energy efficiency class
A

Power input
5–70 W

Pumping head/rate
7 m / 4.5 m³/h

Options

- Other opening temperatures
- Other circulation pumps

7

Dimensions (mm)

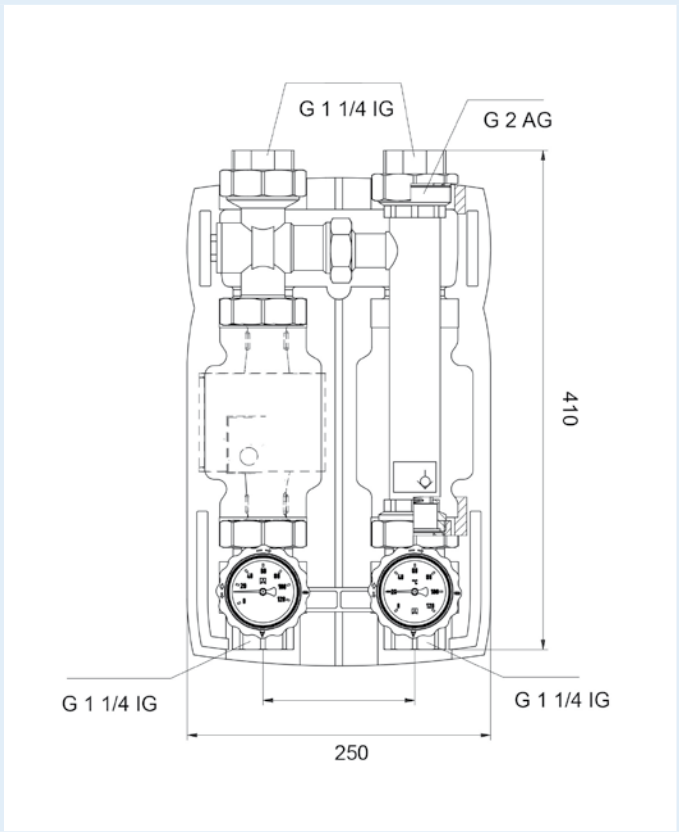

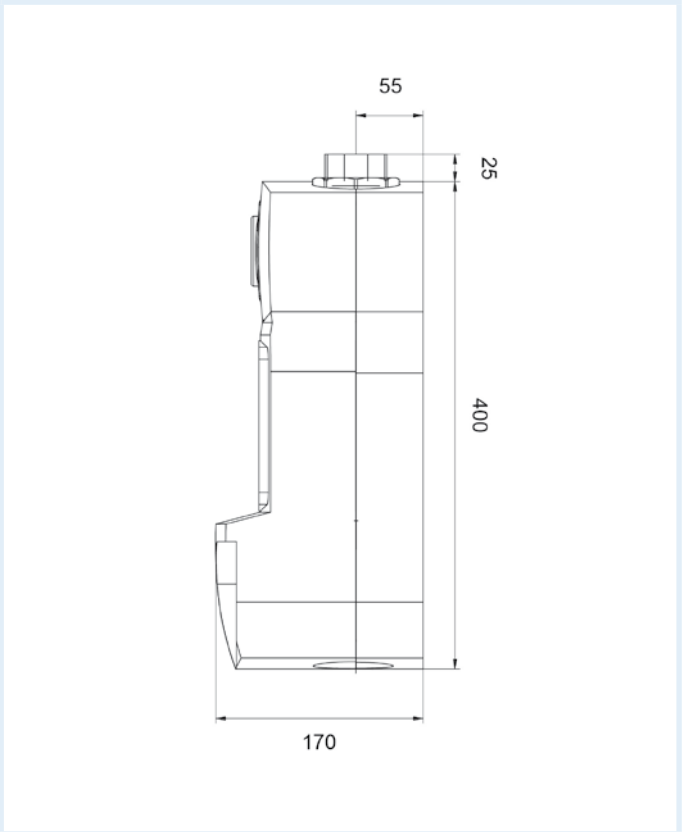

DG: G, PG: 2	Opening temperature	Pump	Part no.	**Price €**
PrimoTherm® 180-3 DN 32 RTA 60 OP G1¼ female x G1¼ female	60 °C	Without pump	77555	
PrimoTherm® 180-3 DN 32 RTA 60 WP02 G1¼ female x G1¼ female	60 °C	WILO STRATOS PARA 30/1-7 r. K.	77556	

Solar pump assemblies PrimoSol®

Efficient solar thermal systems are taking centre stage in heating system design as a result of rising energy costs, new legislation and, most important, increasing environmental awareness. Advanced solar thermal systems can be easily integrated into the heating system concepts for new buildings and for the conversion of existing systems.

AFRISO offers a comprehensive range of components for solar thermal systems for maximum reliability - all from a single supplier. The innovative solar pump assemblies PrimoSol® are made to meet the requirements of the solar systems available on the market.

The pre-assembled, tightness-tested and heat-insulated assemblies are extremely easy and fast to install. The offer is complemented by a comprehensive range of accessories.

i

We provide a great variety of customer-specific solar pump assemblies for OEMs.

Please enquire.

Solar pump assembly PrimoSol® 130

- **Pre-assembled, tightness-tested and heat-insulated assembly**
- **Available with flow meter with ball valve, integrated filling and flushing unit and vent pot for degassing the heat transfer fluid in the flow line**

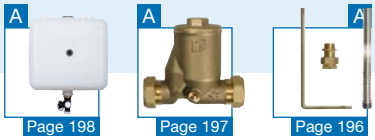

Page 198 Page 197 Page 196

PrimoSol® 130-1

Application

Solar pump assembly/line for connection of collector and storage tank in intrinsically safe, sealed solar thermal systems. PrimoSol® 130 circulates heat transfer fluids such as water/glycol mixtures in the system.

Description

Complete, pre-assembled and tightness-tested solar pump assembly/line with all required safety and functional components, including form-fit insulation.

Depending on the version, the pump line (return/cold) consists of:
- Circulation pump
- Flow meter with ball valve for shut-off, pump side with flange and union nut G1½. Measuring range: 2–12 l/min. With integrated filling and flushing unit, system connection: G¾ male thread.
- Combination valve with system connection G¾ male thread, pump side with flange and union nut G1½. With adjustable gravity brake and thermometer in the hand wheel (blue mark, range 0/120 °C)
- Safety group assembly with connection for expansion vessel. With solar safety valve 6 bar, outlet Rp¾ female thread, pressure gauge Ø 63 mm, 0/10 bar, mounting valve.

The flow line consists of (130-4 only):
- Combination valve with adjustable gravity brake and thermometer in the handle (red mark, range 0/120 °C) with system connection G¾
- Vent pot to remove the gas from the heat transfer fluid with system connection G¾. Transparent hose 200 mm as venting aid.

The insulation is also used to package the product for safe transport.
The safety valve of the safety group assembly complies with Pressure Equipment Directive 2014/68/EC.

Technical specifications

Axis distance
100 mm

System connections
G¾ male thread

Operating temperature range
Ambient: T_{max} = 40 °C
Medium: T_{max} = 120 °C,
short-term T_{max} = 160 °C

System pressure
Max. 6 bar

Flow meter
2–12 l/min

Insulation
Polypropylene EPP

Circulation pump
Grundfos UPM 3 Solar 25–75
Length: 130 mm
Degree of protection IP 42

Supply voltage
AC 230 V, 50 Hz

Power input/pumping head
19 W/4.5 m
28 W/5.5 m
35 W/6.5 m
45 W/7.5 m

DG: G, PG: 2	Part no.	**Price €**
PrimoSol® 130-1, 2-12 l/min	**77886**	
PrimoSol® 130-4, 2-12 l/min	**77889**	
PrimoSol® 130-4, 8-38 l/min	77018	

Solar pump assembly PrimoSol® 130

Dimensions (mm)

Solar pump line PrimoSol® 130-1

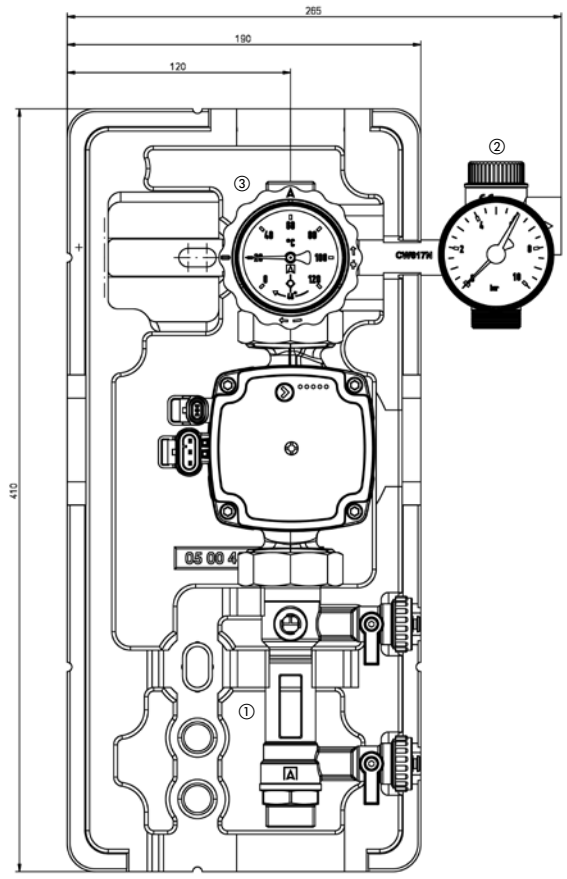

① Flow meter with ball valve as well as filling and flushing unit
② Safety group assembly
③ Combination valve with thermometer (return/cold)

Solar pump assembly PrimoSol® 130-4

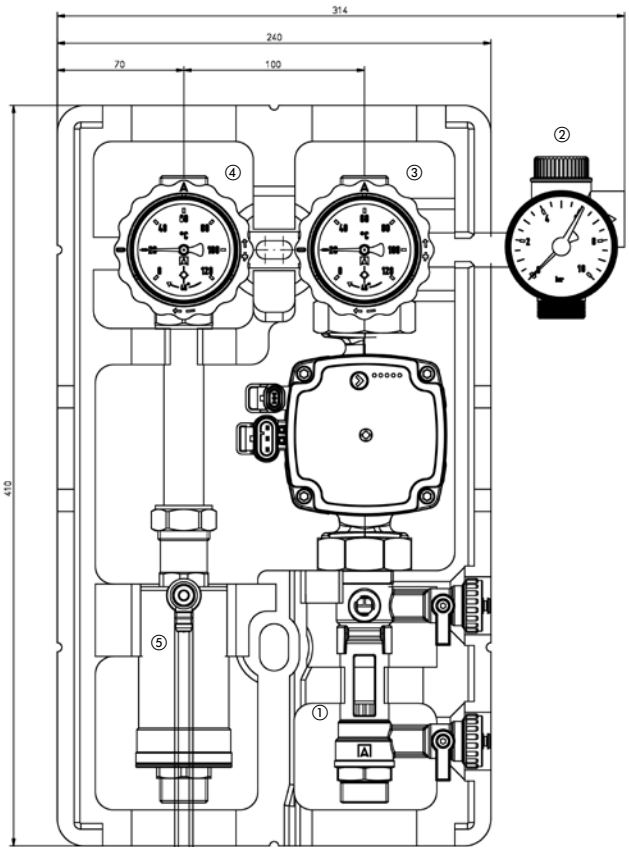

① Flow meter with ball valve as well as filling and flushing unit
② Safety group assembly
③ Combination valve with thermometer (return/cold)
④ Combination valve with thermometer (flow)
⑤ Vent pot for fast and easy venting, especially during filling of the system

Insulation 130-1 and 130-4

The insulation is also used to package the product for safe transport.

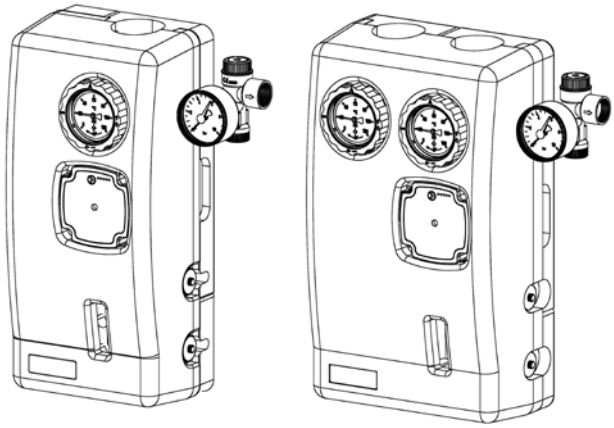

Scope of delivery

PrimoSol® completely pre-assembled with circulation pump and mounting accessories.

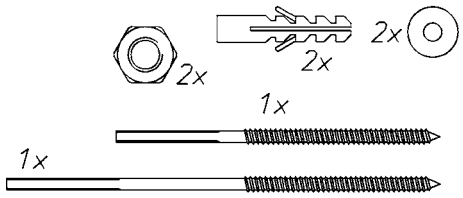

Accessories for solar thermal systems

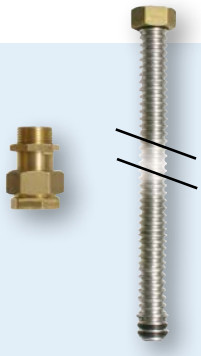

Filling and flushing unit

Description

For solar systems as filling and flushing unit. With ball valve, two boiler filling and drain valves KFE G¾, process connection G1 with union nut and compression fittings at both ends.

Technical specifications

Connections
G1, compression fitting at both ends Ø 22 mm

Dimensions
L: 108 mm

Housing
Brass

Diaphragm safety valve MSS

Description

For solar thermal systems to protect against overpressure. Suitable for water, water/Antifrogen mixtures, water/Tyfocor mixtures and liquids of fluid groups 1 and 2 (Pressure Equipment Directive, Art. 9).

Technical specifications

Connections
Inlet: Rp½
Outlet: Rp¾

Cap
PA6, black

Opening pressure
6 bar

Dimensions
W x H x D 35 x 60 x 45 mm

Housing
Brass CW617 N

Operating temperature range
Medium: -20/+160 °C

Heating capacity
Max. 50 kW

Connection kit

Description

For diaphragm expansion vessels (MAG) suitable for safety group assembly for PrimoSol®.

Consisting of:
- Bracket for wall mounting
- Flex pipe (500 mm, 1 union nut and seals)
- MAG mounting valve
- Mounting accessories

Technical specifications

Connections
Flex pipe: Union nut G¾ and mounting valve G¾

Dimensions
Flex pipe (L): 500 mm
Bracket (W x L): 220 x 110 mm

i Please enquire for diaphragm safety valves with other pressure ratings.

DG: G, PG: 2			Part no.	Price €
Filling and flushing unit	1	1	**77781**	
Diaphragm safety valve MSS	1	84	**42330**	
Connection kit G¾	1	1	77904	

Vents for solar thermal systems

Quick air vents for solar systems

Quick air vents for solar systems with ball valve

Air separator

Description

Quick air vent for use in solar thermal systems with operating temperatures of up to 150 °C and operating pressures of up to 6 bar. Housing made of high-precision turned brass, functional parts made of highly temperature-resistant plastic.
Connection G3/8 with O ring seal.

Quick air vent for use in solar thermal systems with operating temperatures of up to 150 °C and operating pressures of up to 6 bar. Housing made of high-precision turned brass, functional parts made of highly temperature-resistant plastic.
Completely assembled with ball valve as shut-off unit.
Connection G3/8.

Air separator for use in solar thermal systems or in sealed heating systems as per EN 12828 with operating temperatures of up to 150 °C and operating pressures of up to 6 bar.
The air separator removes the air from the heat transfer fluid. The air collects in the housing and can be released via a quick air vent or a manual vent valve connected at the G3/8 threaded connection.
Compression fitting for Cu pipe Ø 22 mm at both ends.

DG: G, PG: 2	Connection			Part no.	Price €
Quick air vents for solar systems	G3/8	1	25	**77900**	
Quick air vents for solar systems with ball valve	G3/8	1	25	**77996**	
Air separator	Compression fitting Ø 22	1	-	**77851**	

Air separator combination Solar LKS, collector tank for solar liquid

Air separator combination Solar LKS

Application

For use in thermal solar systems to remove air bubbles from the solar liquid.

Description

Air separator, completely pre-assembled with quick air vent for solar systems. The air separator removes the air contained in the heat transfer medium. The air collects in the housing and can be released via the quick air vent for solar systems connected at the G3/8 connection by actuating the ball valve.

Technical specifications

Operating temperature range
Medium: Max. 150 °C

System pressure
Max. 6 bar

System connections
Compression fitting for Cu pipe
Ø 22 mm at both ends.

Collector tank for solar liquid

Collects groundwater polluting solar liquid in the case of system overpressure.

Collector tank for solar liquid with integrated drain valve. Volume 10 l. In the case of system overpressure, it collects escaping solar liquid. A basic volume of 1 to 1.5 l of liquid is always contained in the collector tank to avoid overheating of the collector tank if solar liquid escapes suddenly from the solar thermal system.

Operating temperature range
Medium: Max. 95 °C
short-term 120 °C
(without basic liquid volume)

Dimensions
W x H x D: 300 x 390 x 145 mm

Weight
0.97 kg

Filling volume
Max. 10 l

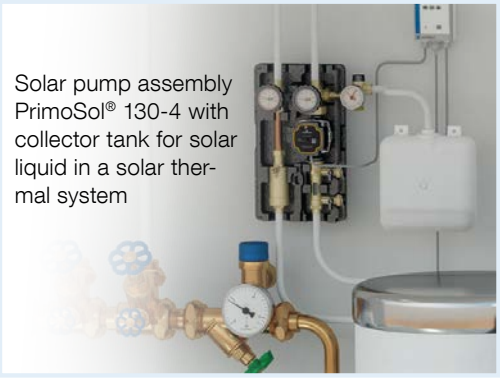

Solar pump assembly PrimoSol® 130-4 with collector tank for solar liquid in a solar thermal system

DG: G	PG			Part no.	Price €
Air separator combination Solar LKS, Connection: compression fitting Ø 22	1	1	1	**77850**	
Collector tank for solar liquid	1	1	1	**77796**	

Single room temperature controller CosiTherm®

Overview wired version

Base module with controller module for 6 control circuits

Base module with timer module and controller module for 8 control circuits

Base module with timer module and controller module for 12 control circuits

Room temperature sensor wired

Functions
- Adjustment of reference temperature 6/30 °C
- Measurement of actual temperature

7

i

The controller modules can be combined as required, subject to the conditions on site.

reddot award 2014 winner

enocean®

Overview wireless version

Base module with controller module for 6 control circuits

Base module with timer module and controller module for 8 control circuits

Base module with timer module and controller module for 12 control circuits

Room temperature sensor wireless

Functions
- Adjustment of reference temperature 6/30 °C
- Measurement of actual temperature
- Humidity measurement 0/100 % r.h. (option)

Functions and connections
Single room temperature controller CosiTherm®

Base module BM

Base module BM

1 LED green: Operation mains voltage
2 LED green: Operation DC 5 V
3 LED red: Pump "Heating"
4 LED blue: Pump "Cooling"
5 LED blue: Display program mode "Heating" or "Cooling"
6 Connection supply voltage AC 230 V
7 Relay contact pump "Heating"
8 Relay contact pump "cooling"
9 Cascading output "Heating/Cooling"
10 Input switchover "Heating/Cooling"

7

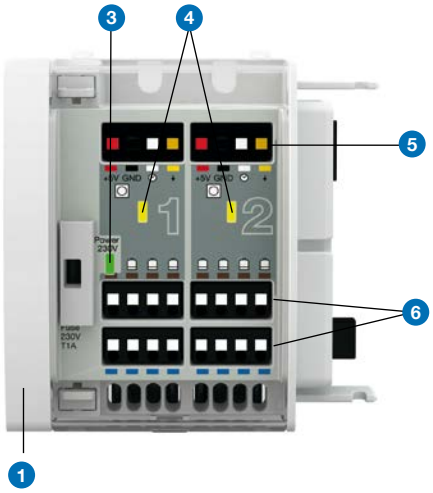

Controller module D2

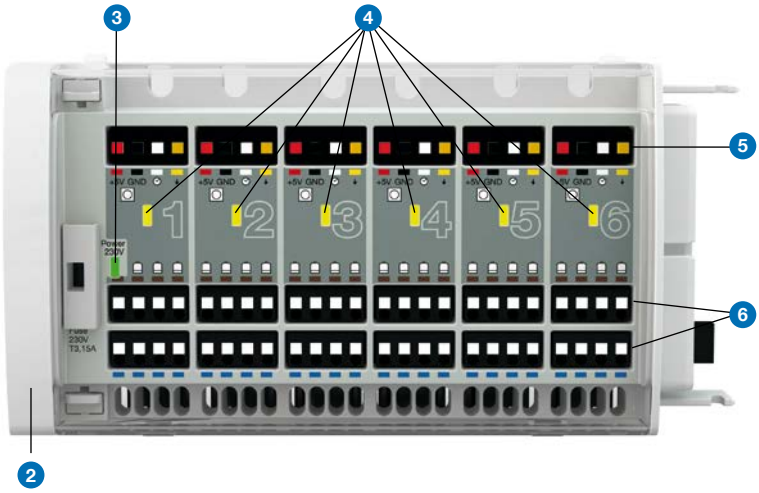

Controller module D6

Controller module wired

1 Controller module with two control circuits
2 Controller module with six control circuits
3 LED green:
Indication mains voltage for thermal actuators
4 LED yellow: Indication thermal actuator active
5 Terminal block for room temperature sensors
6 Terminal block for thermal actuators

Single room temperature controller CosiTherm® – wired

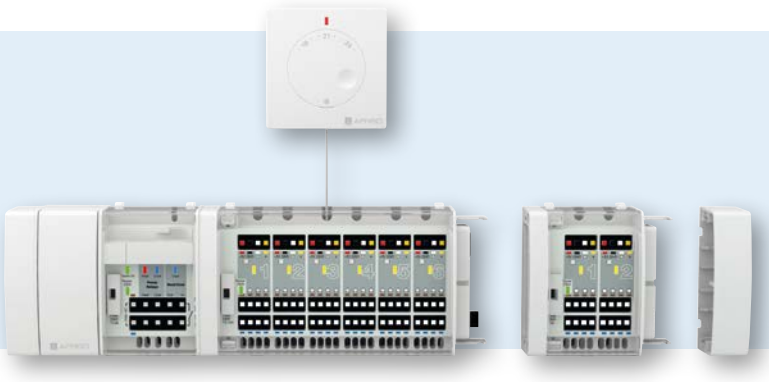

- **For manifold systems for heating and cooling**
- **Extremely flat room temperature sensor with a height of 12.5 mm**
- **Room temperature sensor with wire connection**
- **Timer module for programming temperature reduction, pump operating time and valve protection function**

Application

Controls the temperature of individual rooms in connection with manifold systems for heating and cooling.

Description

The base version of the single room temperature controller CosiTherm® wired consists of a base module, at least one controller module with two or six independent control circuits and a corresponding number of room temperature sensors. The controller modules can be interconnected in a modular way to account for the number of control circuits/rooms. One room temperature sensor is required per control circuit; it is wired to the controller module. The room temperature sensor measures the actual temperature in the room. The reference temperature is adjusted via the rotary knob of the room temperature sensor. The controller module compares the actual temperature and the reference temperature and controls the volume flow of the heating/cooling water via the thermal actuators of the manifold system.
An optional timer module with display and an integrated hundred-year calendar can be plugged into the base module. It features two independently programmable switching channels for temperature reduction, nine programmable memory blocks and a valve and pump protection function. The additional pump running time is adjustable. The terminals of the controller modules are colour-coded for easy assignment to the wires of the thermal actuators; in conjunction with the DIN rail snap connectors at the rear of the housing, this facilitates installation.

Functions

Base module BM
- Power supply of the room temperature sensors (DC 5 V) and thermal actuators (AC 230 V)
- Switchover of the system to "Heating" or "Cooling"
- Control of the heating/cooling pumps

Controller module
- Comparison of actual and reference temperatures
- Control heating/cooling water via connected thermal actuators
- Connection of two or six control circuits, extensible as required
- Wired connection of room temperature sensors

Timer module UM (option)
- Time data: Date, time, weekday (leap year detection)
- Automatic switching between daylight saving time and winter time (CEST)
- Temperature reduction adjustment
- Additional pump running time adjustment
- Valve and pump protection function adjustment

Timer module (option) for programming and display of date, time, weekday

Single room temperature controller CosiTherm® – wired

Technical specifications

Connections
Base module BM
Max. 9 controller modules D2 or
3 controller modules D6
Controller module D2
Max. 2 room temperature sensors and
8 actuators
Controller module D6
Max. 6 room temperature sensors and
24 actuators

Operating temperature range
Ambient/storage: -10/+60 °C

Base module BM

Supply voltage
AC 230 V, 50-60 Hz

Nominal power
1 VA

Housing
Plastic housing PC/ABS
W x H x D: 122 x 92 x 45 mm
Degree of protection: IP 20 (EN 60529)

Weight
215 g

Controller module

Supply voltage
AC 230 V, DC 5 V (via base module BM)

Nominal power
Controller module D2: 0.1 W
Controller module D6: 0.3 W

Housing (W x H x D)
Plastic housing PC/ABS
Controller module D2: 73 x 92 x 45 mm
Controller module D6: 162 x 92 x 45 mm
Degree of protection: IP 20 (EN 60529)

Weight
Controller module D2: 130 g
Controller module D6: 260 g

Timer module UM (option)

Automatic switching between daylight saving time and winter time (CEST)

Temperature reduction
4 K
Switching channels: 2, independently programmable
Memory blocks: 9, independently programmable

Valve and pump protection function/ additional pump running time
0/15 min, adjustable

Supply voltage
DC 3.3 V (via base module BM)

Nominal power
3 mW

Housing (W x H x D)
Plastic housing PC/ABS
Colour: Light grey, similar to RAL 7047
W x H x D: 37 x 93 x 28 mm
Degree of protection: IP 30 (EN 60529)

Weight
33 g

DG: G, PG: 4	Part no.	**Price €**
Base module BM	78112	
Controller module D2 for 2 control circuits	78114	
Controller module D6 for 6 control circuits	78115	
Options		
Timer module UM for base module BM	78113	
Wireless module timer FMA with external antenna, for timer module UM	78122	

Single room temperature controller CosiTherm® – wired

Types and dimensions (mm)

Base module BM

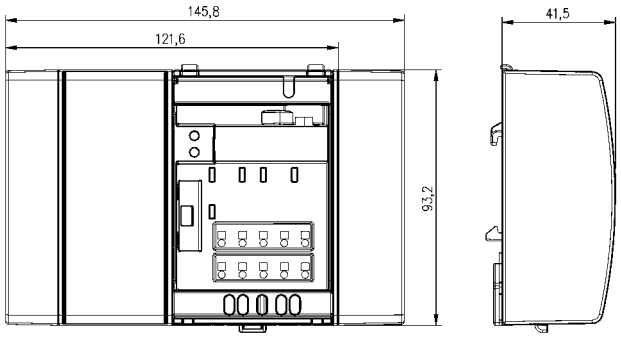

Controller module D2

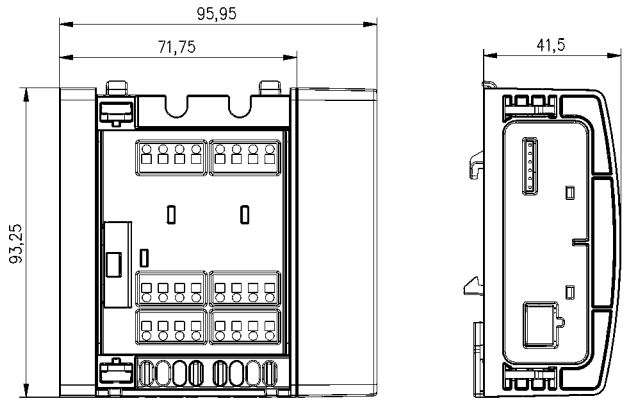

Controller module D6

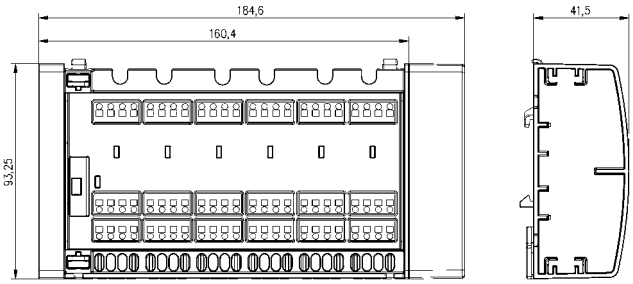

Timer module UM

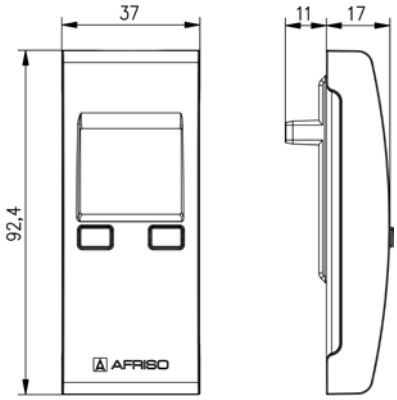

7

Single room temperature controller CosiTherm® Wireless

- Temperature controller for the connection of thermal actuators
- For manifold systems for heating and cooling
- Worldwide access via AFRISOhome gateway

A Page 116

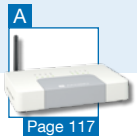

A Page 117

A Page 207

Application

Controls the temperature of individual rooms in connection with manifold systems for heating or cooling. EnOcean® wireless technology for integration into building automation systems.

Description

The base version of the single room temperature controller CosiTherm® Wireless consists of a base module, at least one controller module with two or six independent control circuits and a corresponding number of room temperature sensors. The controller modules can be interconnected in a modular way to account for the number of control circuits/rooms. One room temperature sensor is required per control circuit; the standard version is battery-less and connected to the controller module via the EnOcean® wireless technology. The room temperature sensor measures the actual temperature in the room. The reference temperature is adjusted via the rotary knob of the room temperature sensor or via the app AFRISOhome. The controller module compares the actual temperature and the reference temperature and controls the volume flow of the heating/cooling water via the thermal actuators of the manifold system.
The base module features two independently programmable switching channels for temperature reduction, nine programmable memory blocks and a valve and pump protection function. The additional pump running time is adjustable. The terminals of the controller modules are colour-coded for easy assignment to the wires of the thermal actuators; in conjunction with the DIN rail snap connectors at the rear of the housing, this facilitates installation.
With an AFRISOhome gateway, it is possible to remotely check and, if necessary, adjust the room temperatures via the AFRISOhome app (for example, when coming back from winter vacation). This flexible remote control of the room temperature combines multiple benefits: you can increase living comfort and reduce energy costs.
In conjunction with additional AFRISO products with EnOcean® wireless technology, the user can configure a whole range of fully customisable, extensible applications.

Functions

Base module BM
- Power supply of the thermal actuators (AC 230 V)
- Switchover of the system to "Heating" or "Cooling"
- Control of the heating/cooling pumps

Controller module
- Comparison of actual and reference temperatures
- Control heating/cooling water via connected thermal actuators
- Connection of two or six control circuits, extensible
- Connection to room temperature sensors EnOcean® wireless technology

Single room temperature controller CosiTherm® – wireless

Technical specifications

Connections
Base module BM
Max. 9 controller modules F2 or
3 controller modules F6
Controller module F2
Max. 2 room temperature sensors and
8 actuators
as well as external antenna
Controller module RM F6
Max. 6 room temperature sensors and
24 actuators as well as external antenna

Operating temperature range
Ambient/storage: -10/+60 °C

EnOcean® wireless
Frequency: 868.3 MHz
Transmission power: Max. 10 mW
Range: 10 to 30 m (depending on room arrangement and materials in the building)

Base module BM

Supply voltage
AC 230 V, 50–60 Hz

Nominal power
1 VA

Housing
Plastic housing PC/ABS
Colour: Light grey, similar to RAL 7047
W x H x D: 122 x 92 x 45 mm
Degree of protection: IP 20 (EN 60529)

Weight
215 g

Controller module

Supply voltage
AC 230 V, DC 5 V (via base module BM)

Nominal power
Controller module F2: 0.3 W
Controller module F6: 0.5 W

Housing (W x H x D)
Plastic housing PC/ABS
Controller module F2:73 x 92 x 45 mm
Controller module F6:162 x 92 x 45 mm
Degree of protection:IP 20 (EN 60529)

Weight
Controller module F2: 130 g
Controller module F6: 260 g

7

i See operating instructions for detailed information on the range of the EnOcean® wireless module.

DG: G, PG: 4	Part no.	**Price €**
Base module BM	**78112**	
Controller module F2A with external antenna, for 2 control circuits	**78123**	
Controller module F6A with external antenna, for 6 control circuits	**78124**	

Single room temperature controller CosiTherm® – wireless

Types and dimensions (mm)

Base module BM

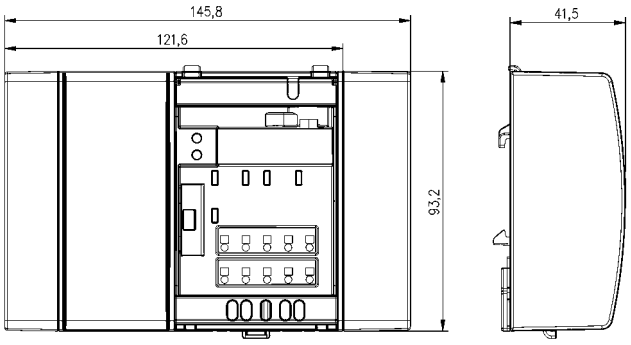

Controller module F2

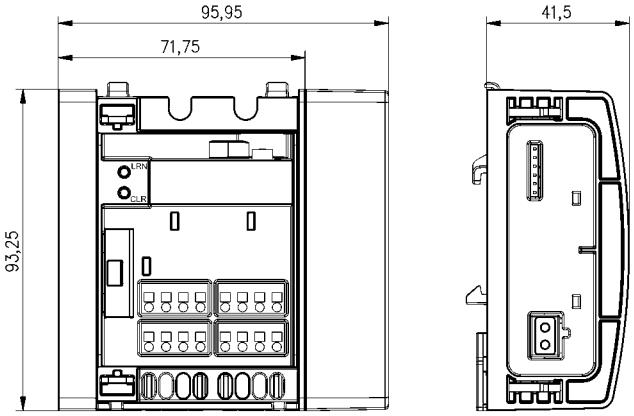

Controller module F6

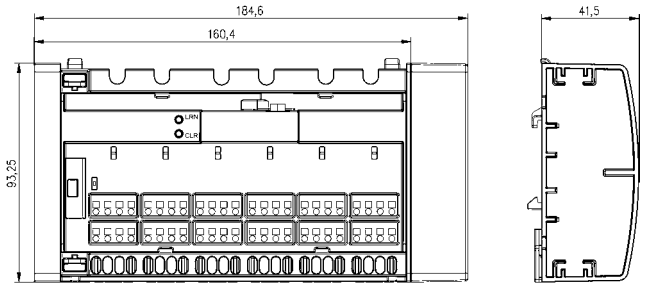

Room temperature sensor FT/FTF – wireless

- **Extremely flat with a height of 12.5 mm**
- **Wireless operation (photovoltaic cell or battery)**
- **Flexible location-independent use anywhere in buildings**

A Page 204 | A Page 116 | A Page 117

reddot award 2014 winner

Application

Determination of the actual ambient temperature and adjustment of the reference value for the room temperature.

Description

The room temperature sensor FT transmits the actual ambient temperature as well as the reference room temperature via the integrated EnOcean® wireless module to the single room temperature controller CosiTherm® Wireless or to the AFRISOhome gateway. The room temperature sensor FTF also transmits the current humidity value. The reference value for the room temperature is adjusted by means of the integrated rotary knob.
The actual temperature in rooms with an underfloor heating system is compared to the reference temperature on an ongoing basis. If there is a difference, the single room temperature controller CosiTherm® Wireless adapts volume flows of the heating/cooling water via the thermal actuators of the manifold system. The energy required to send reference temperature and actual temperature values is generated by means of an integrated photovoltaic cell; it is also possible to use a standard battery.
The AFRISOhome gateway transmits alarm messages and changes in temperature and/or humidity via WLAN, LAN and GSM to the person in charge (for example, to the owner, the facility manager, the janitor or other configured contacts); the message includes information on which room temperature sensor has signalled the change. The AFRISOhome gateway in conjunction with additional AFRISO products with EnOcean® wireless technology allows the user to configure a whole range of fully customisable, extensible applications.

Technical specifications

Operating temperature range
Ambient: -20/+60 °C
Storage: -20/+60 °C

Temperature adjustment range
8/30 °C

Temperature measurement
0/40 °C
Accuracy: ± 1 K

Humidity measurement
With room temperature sensor FTF only
Room humidity: 0/100 % r.h.
Accuracy: ± 5 % r.h.

Supply voltage
Energy harvesting (via photovoltaic cell) or type 1632 battery, DC 3 V (with daylight less than 200 lx)

Housing
Wall mounting housing made of PC
Colour: White, similar to RAL 9003
W x H x D: 78 x 82.5 x 12.5 mm
Weight: 43 g
Degree of protection: IP 30 (EN 60529)

EnOcean® wireless
EEP: A5-10-03 (FT) or A5-10-12 (FTF)
Frequency: 868.3 MHz
Transmission power: Max. 10 mW
Range: 10 to 30 m (depending on room arrangement and materials in the building)

Scope of delivery
- Room temperature sensor FT/FTF
- 4 x adhesive dots
- Without battery

Necessary additional components
- CosiTherm® Wireless and/or
- AFRISOhome gateway

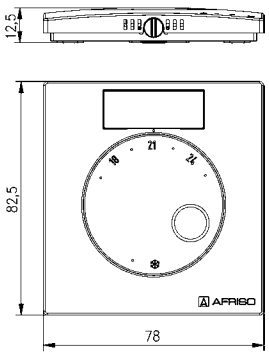

i See operating instructions for detailed information on the range of the EnOcean® wireless module.

DG: L, PG: 4	Part no.	Price €
Room temperature sensor FT (temperature)	78111	
Room temperature sensor FTF (temperature, humidity)	78119	

Room temperature sensor D - wired

- **Extremely flat with a height of 12.5 mm**
- **Easy surface mounting**

Page 201

Application

Determination of the actual ambient temperature and adjustment of the reference value for the room temperature.

Description

The room temperature sensor D transmits the actual ambient temperature as well as the reference room temperature via the connection wire to the single room temperature controller CosiTherm®. The reference value for the room temperature is adjusted by means of the integrated rotary knob. The actual temperature in rooms with an underfloor heating system is compared to the reference temperature on an ongoing basis. If there is a difference, the single room temperature controller CosiTherm® adapts volume flows of the heating/cooling water via the thermal actuators of the manifold system.

Technical specifications

Operating temperature range
Ambient: -10/+60 °C
Storage: -10/+60 °C

Temperature adjustment range
6/30 °C

Temperature reduction
4 K

Supply voltage
DC 5 V, via controller module

Nominal power
0.012 VA

Wired connection
Max. 100 m

Housing
Wall mounting housing made of PC
Colour: White, similar to RAL 9003
W x H x D: 78 x 78 x 12.5 mm
Weight: 30 g
Degree of protection: IP 30 (EN 60529)

Scope of delivery
- Room temperature sensor D
- Mounting kit (2 x screws, 2 x screws)

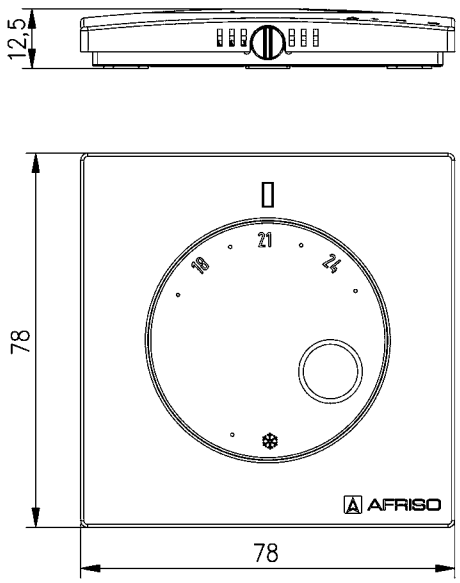

DG: G, PG: 4	Part no.	**Price €**
Room temperature sensor D	**78110**	

Room thermostats TA 03

- **Mechanical temperature controllers with lamp and on/off switch**
- **For room temperature control**
- **Switch-off function for the summer months**
- **Easy surface mounting**

Page 211

Application

Mechanical room thermostats for domestic applications. On-wall wall mounting allows for retrofitting.

Description

The temperature measured by the probe cause a change in the volume of the measuring liquid. The force acting triggers electrical switching. For optimum temperature control, the room thermostat should be installed at an inside wall opposing the radiator. Install the room thermostat away from heat source of all kinds and from draft and do not expose it to sunlight. The best installation height is approx. 1.5 m above the floor.

7

Technical specifications

Operating temperature range
Ambient: 0/50 °C
Storage: 0/50 °C

Temperature adjustment range
7/30 °C

Switching differential
ΔT ≤1K

Temperature change rate
1K/15 minutes

Adjustment
Adjustable from the outside

Probe element
Liquid-filled

Housing
Wall mounting housing made of PVC
Colour: White (RAL 9016)
W x H x D: 80 x 80 x 44 mm
Weight: 134 g
Degree of protection: IP 20 (EN 60529)

Electrical switching contact
Changeover contact

Contact rating
NC 16 (2.5) A 250 V AC
NO 16 (2.5) A 250 V AC

DG: G, PG: 4	Lamp	On/off switch	Part no.	**Price €**
TA 03	-	-	**42616X**	
TA 03	•	-	**42617X**	
TA 03	•	•	**42618X**	
TA 03	•	Summer/winter	**42619X**	

Room thermostats TA 03

Types and dimensions (mm)

TA 03

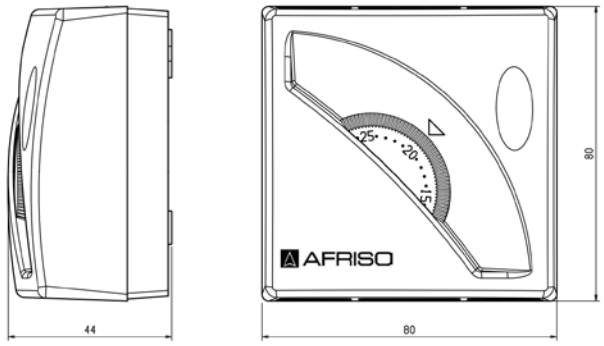

Wiring diagram

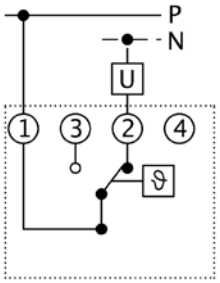

TA 03 without switch, with lamp

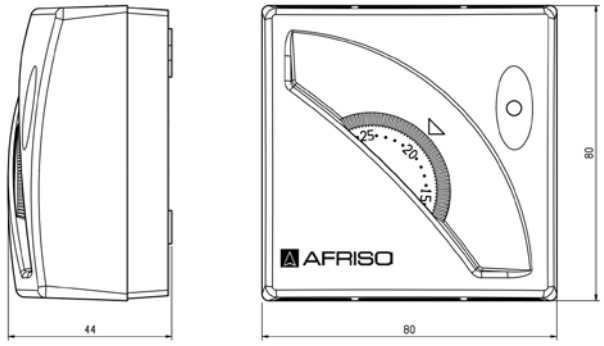

Wiring diagram

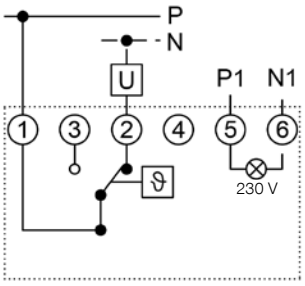

TA 03 with switch, with lamp

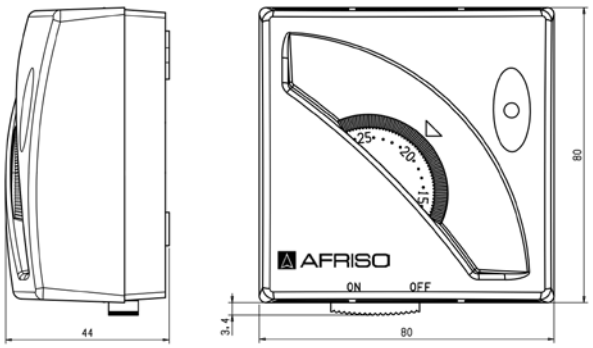

Wiring diagram

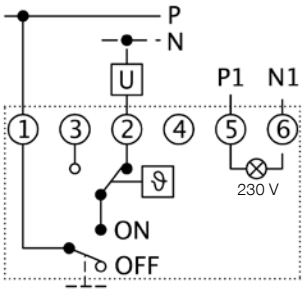

Thermal actuators

Application

For setting the hot water valves in radiators or AFRISO distribution manifolds such as heating/cooling circuit manifolds ProCalida® MC and EF or industrial manifolds IN. Actuators convert the electrical signal received from room or timer thermostats into a valve stroke to control the set temperature via the flow volume.

TSA-02

Description

Electro-thermal actuator with position indication, connection cable and union nut for direct connection to the valve or upper part of the valve. Closed when de/energised; available as 24 V or as 230 V version.

Technical specifications

Operating mode
Closed when de-energised

Stroke
0/3.2 mm
Indication via cams on hood

Opening time
< 5 min

Operating temperature range
Ambient: Max. 60 °C

Supply voltage
AC/DC 24 V or AC 230 V
Power: 2 W

Connection
Union nut: M 30 x 1.5 mm
Closing dimension: 10.8 mm
Cable length: 1 m

Housing
Plastic
Degree of protection IP 54 (EN 60529)

TSA-03

Electro-thermal actuator with position indication, limit switch, connection cable and union nut for direct connection to the valve or upper part of the valve. Closed when de-energised. TSA-03 can be used to switch off the pump via the integrated limit switch when all valves are closed.

Operating mode
Closed when de-energised

Stroke
0/3.2 mm
Indication via cams on hood

Opening time
< 5 min

Operating temperature range
Ambient: Max. 60 °C

Supply voltage
AC/DC 24 V or AC 230 V
Power: 2 W

Switching output
1 voltage-free, normally open contact

Contact rating
AC/DC 24 V, 2/6 A
AC 230 V, 0.1/6 A

Connection
Union nut: M 30 x 1.5 mm
Closing dimension: 10.8 mm
Cable length: 1 m

Housing
Plastic, degree of protection IP 40 (EN 60529)

i

AFRISO offers customer-specific versions of the actuators for many valve upper parts for OEMs. We look forward to your enquiry.

DG: G, PG: 4			Part no.	Price €
TSA-02, 230 V	1	10	**78882**	
TSA-02, AC/DC 24 V	1	10	78883	
TSA-03, AC 230 V with limit switch	1	10	78871	
TSA-03, AC/DC 24 V with limit switch	1	10	78872	

NEW

Single room controller RTL-Box 324 Vario return temperature limiter

- **Very compact visible plate (11.5 x 13.5 cm) made of high-gloss plastics**
- **Elegant, compact control head**
- **Extact alingment with mounting wall due to depth-adjustable mounting frame**
- **Aesthetic design allows for user-friendly mounting at the level of the light switches**

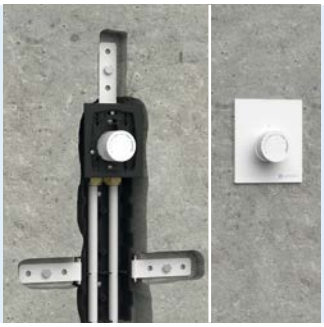

Application

For decentralised temperature control in individual rooms with underfloor heating systems or wall heating systems in combination with radiator installation. Ideal for scenarios without radiator installation and if no centralised distribution is desired. The RTL-Box 324 Vario combines heating circuit, room temperature sensor and control in a single unit. The purely mechanical function of the room controller requires neither additional electrical power nor actuators nor similar equipment. Due to the compact dimensions and the aesthetic design, the RTL-Box fits perfectly at the level of light switch installations. This ensures optimum control characteristics and excellent user-friendliness.

7

Description

The single room controller RTL-Box 324 Vario consists of a high-grade, high-gloss cover plate made of sturdy plastic, an aesthetic thermostat control head and a mounting frame. The mounting frame adapts to the wall and levels a height of up to 25 mm. The optional extension kit extends the thermostat head by 20 mm if the maximum wall level height is exceeded. The wall installation box with shell protection comprises am adjustable valve assembly consisting of a control valve, a thermostat valve and a return temperature limiter for limiting the radiator return temperature top a temperature level suitable for the underfloor heating system. The valve opens when the values falls below the adjusted limit value. The pipes of the underfloor heating system are mounted in the wall installation box by means of standard compression fittings.

Technical data

Temperature adjustment range
Reference: 8/28 °C (room temperature)
Return temperature: 20/48 °C

Operating temperature range
Medium: T_{max} = 90 °C

System connections
Connector with eurocone, can be fixed with spring clips

Pipe connection
Eurocone G¾

Nominal pressure
Max. 6 bar

Installation depth
Min. 63 mm
Max. 88 mm

Housing
Plastic cover PC/ABS
high-gloss white
Plastic wall installation box PP black
Weight: 0.2 kg

DG: G, PG: 4	Part no.	**Price €**
Single room controller RTL-Box 324 Vario	**78330**	
Accessories		
Extension kit RTL-Box 324 Vario	**78331**	

Types and dimensions (mm)

Cover with wall installation box

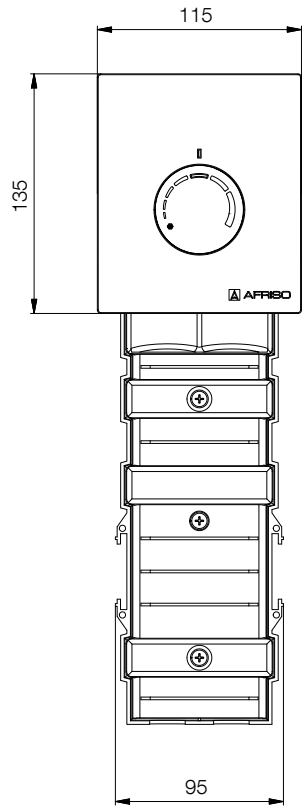

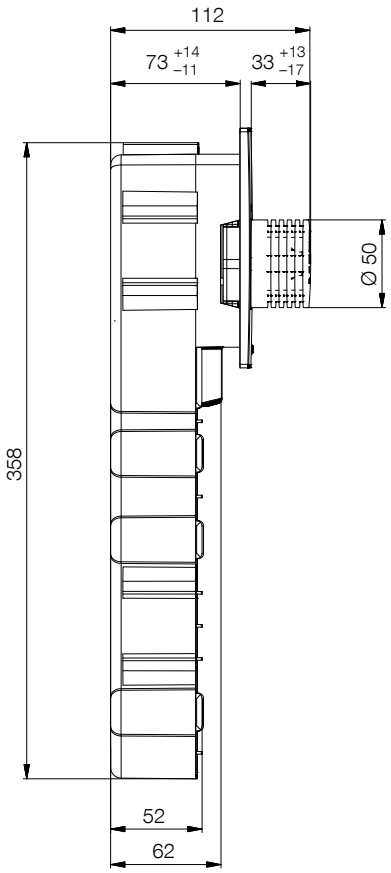

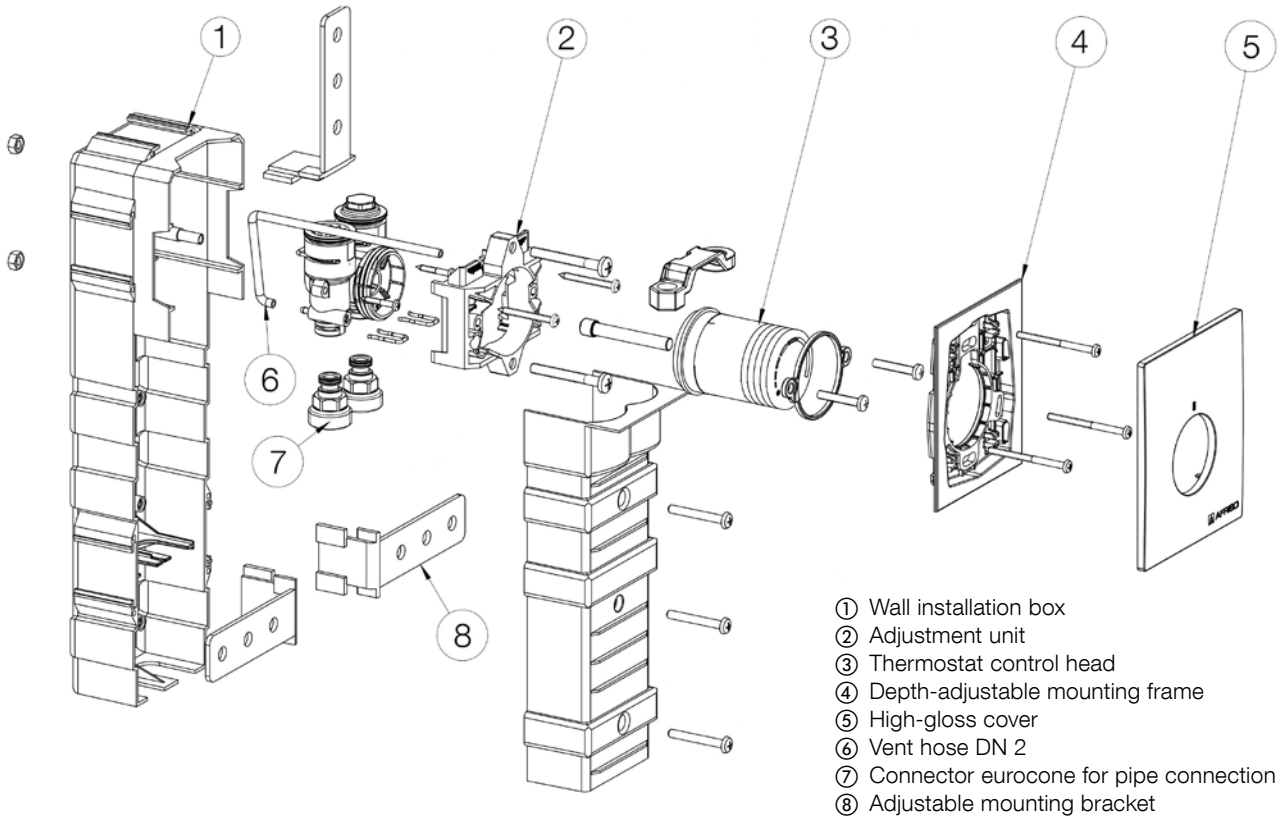

① Wall installation box
② Adjustment unit
③ Thermostat control head
④ Depth-adjustable mounting frame
⑤ High-gloss cover
⑥ Vent hose DN 2
⑦ Connector eurocone for pipe connection
⑧ Adjustable mounting bracket

7

Manifold systems ProCalida®
for heating, cooling and geothermal systems

AFRISO has been manufacturing complex plastic manifolds for leading global vendors of floor heating, cooling and geothermal systems for many years. The know-how, together with our exceptionally high degree of vertical integration including our own tool design allows us to implement even complex geometries to customer specifications.

High-grade plastic materials enable a great variety of technical features and optimum, practical designs. Plastic valves are not susceptible to corrosion and deposits. Thermometers and flow meters are easy to integrate. Our offering is complemented by a comprehensive range of accessories. For decades, experts from the fields of heating, ventilation and air conditioning have been working with AFRISO products under the brands of leading system providers.

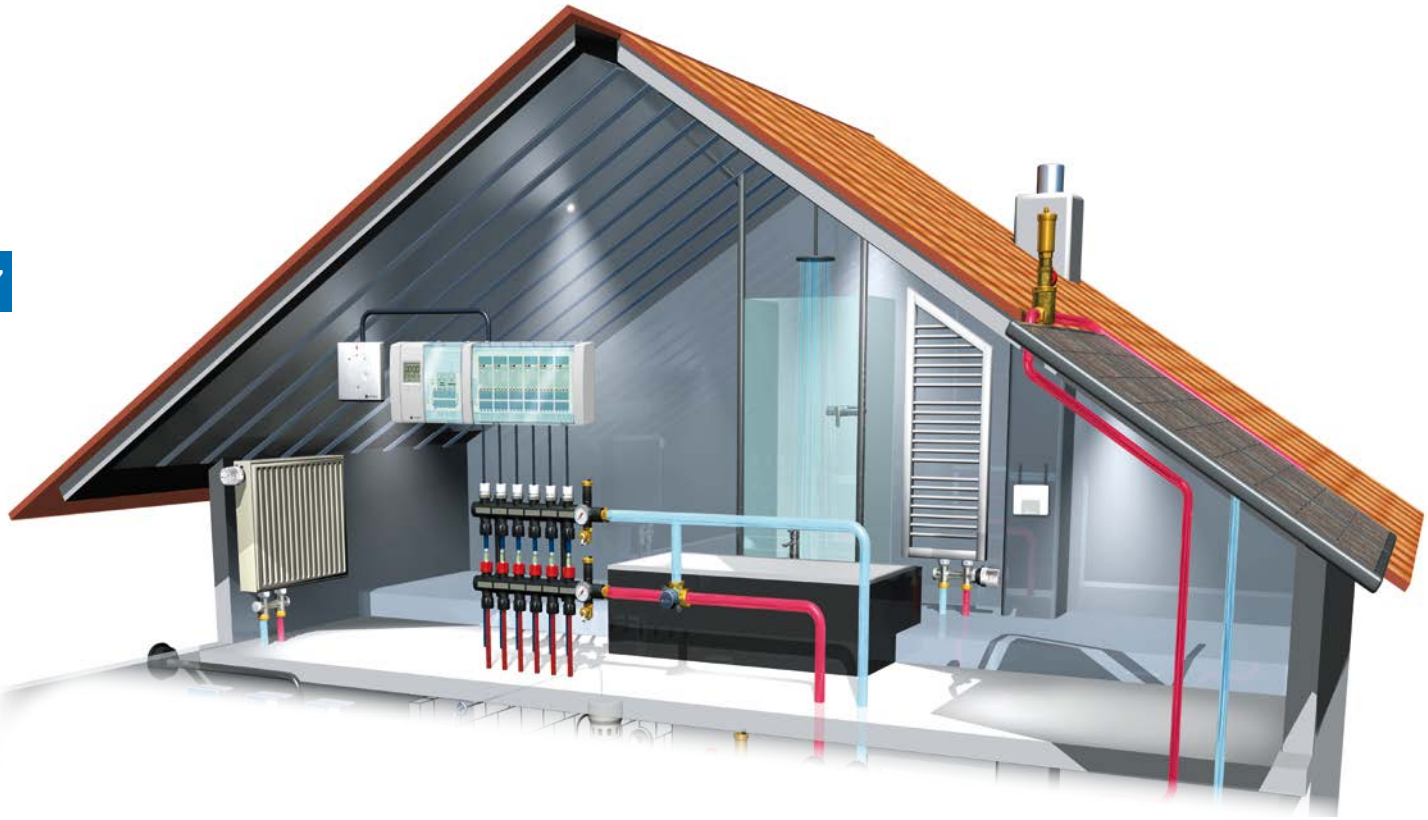

Advantages – your benefits

- Complex, customised manifold systems made of high-grade plastic materials proven over many years
- For heating, cooling and geothermal systems
- Numerous combinations in terms of type and number of heating circuits
- Pre-assembled, tightness-tested and ready to be connected
- Excellent insulation properties (low heat emission and noise transmission; suppression of condensate)
- Corrosion-resistant for long service life
- Vast array of versions for numerous application scenarios and logistics concepts
- Can be combined with thermometers, flow meters, thermo-actuators, connection valves and many other components.
- Low weight
- Simplified logistics
- Compatible control units

Manifold systems ProCalida®
for heating, cooling and geothermal systems

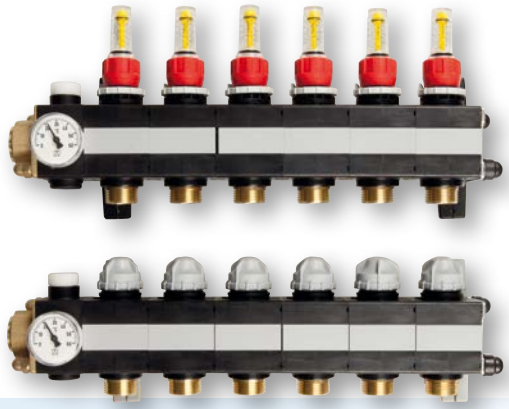

ProCalida® MC 1

Heating circuit manifold ProCalida® MC 1

Modular, very short, robust plastic heating circuit or cooling circuit manifold with up to 12 heating circuits. Return with stroke valves for actuators, flow with shut-off valves or flow meters as required. Temperature indication at flow and return lines. Main connection with union nut G1. Manual vent, filling and drain valve or quick air vent can be mounted. With dovetail guide at both ends for fast mounting to wall mounting bracket and for maximum installation flexibility.

Heating circuit
Distance: 50 mm
Connection: G¾ eurocone

Operating temperature range
Medium: Max. 60 °C at 6 bar
or max. 90 °C at 3 bar

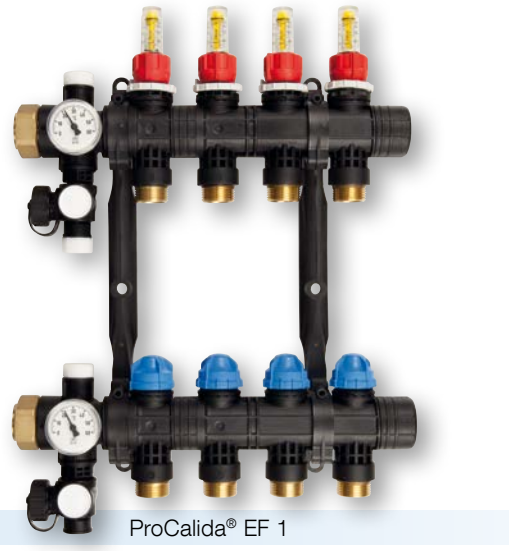

ProCalida® EF 1

Heating circuit manifold ProCalida® EF 1

Modular, very short plastic heating circuit or cooling circuit manifold with up to 12 heating circuits. Return with stroke valves for actuators, flow with shut-off valves or flow meters as required. Temperature indication at flow and return lines. Main connection with union nut G1. Manual vent, filling and drain valve or quick air vent can be mounted. Flexible connection from left or right as well as from the bottom with a bracket kit.

Heating circuit
Distance: 50 mm
Connection: G¾ eurocone

Operating temperature range
Medium: Max. 60 °C at 6 bar
or max. 90 °C at 3 bar

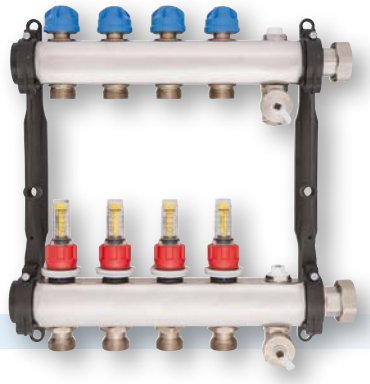

ProCalida® VA 1

Heating circuit manifold ProCalida® VA 1

Stainless steel heating circuit manifold with up to 12 heating circuit manifolds. Return with stroke valves for actuators, flow with shut-off valves or flow meters as required. Main connection with union nut G1. With filling and drain valve as well as manual vent. Quick air vent can be fitted. Connection via angular connection piece with ball valve G1 or control valve (return: actuator adaptation M30 x 1.5 male thread/flow: adjustment valve or flow meter). Easy snap-on mounting of manifold on wall bracket.

Heating circuit
Distance: 50 mm
Connection: G¾ eurocone

Operating temperature range
Medium: Max. 60 °C at 6 bar
or max. 90 °C at 3 bar

Manifold systems ProCalida®
for heating, cooling and geothermal systems

Heating circuit/geothermal manifold ProCalida® IN 1½/GT 1½

Modular plastic manifold for industrial or geothermal applications with up to 20 heating circuits. Return either with stroke valves for actuators or with shut-off valves, flow either with shut-off valves or with flow meters as required. Main connection with union nut G1½. Individual installation of filling and drain valve, quick air vent, pressure gauge and thermometer via multi-way union. Easy snap-on mounting of manifold on wall bracket.

ProCalida® IN 1½

Heating circuit
Distance: 70 or 100 mm
Connection: G1 flat-sealing, compression fitting
for pipe Ø 25 x 2.3/2.5 or Ø 32 x 2.9 and
Ø 40 x 3.7 or G¾ eurocone

Operating temperature range
Medium: -20/+60 °C at 6 bar

7

Geothermal manifold ProCalida® GT 3

Modular manifold for brine, made of plastic, for any number of heating circuits. With one shut-off valve each in the flow and return (adjusted values can be locked via a ring) and integrated flow rate indication in the return. Main circuit connection and heating circuit connections can be made to customer specifications. Individual installation of filling and drain valve, air vent and pressure gauge via cross piece. Thermometer can be integrated in the line and/or in each individual heating circuit. Robust, easy-to-mount wall bracket.

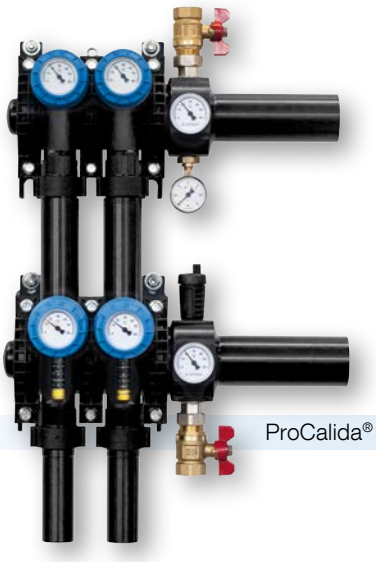

ProCalida® GT 3

Heating circuit
Distance: 80, 90, 100, 110, 130, 140, 150 or 160 mm
Connection:Compression fitting for pipe Ø 25 x 2.3/2.5 mm
or Ø 32 x 2.9 mm and Ø 40 x 3.7 mm;
Customer-specific versions are also available
Individual heating circuits can be rotated by 360°

Operating temperature range
Medium: -20/+60 °C at 6 bar

Range (flow meter)
2–12 l/min, 5–42 l/min, 35–70 l/min, 60–125 l/min

Drinking water manifold

Plastic drinking water manifold with 3, 4, 6 or 8 drinking water connections. Triple and quadruple versions also available in H shape (both ends). Another manifold can be connected to the outlet end.

Drinking water manifold

Drinking water connections
Distance: 45 mm
Connection: PEX hose ½"
Inlet: ¾" or 1" PEX pipe
Outlet: ¾" or 1" PEX pipe, blind

Operating temperature range
Medium: max. 100 °C at 10 bar

Measuring instruments for hydraulic balancing

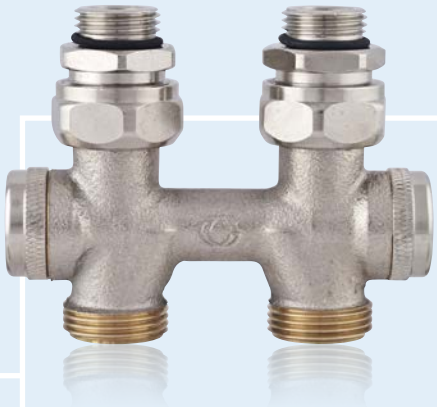

Combination blocks

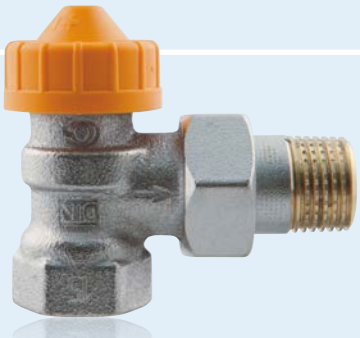

Radiator valves

CHAPTER 8

Valves and control technology for radiators and hydraulic balancing

OVERVIEW

Valves and control technology for radiators and hydraulic balancing at a glance 220

What is hydraulic balancing? 224

Automatic hydraulic balancing: **Vario-DP** 226

Hydraulic balancing with measuring: **VarioQ** 227

HYDRAULIC BALANCING

Calculation software **VarioQCalc** 228

Handheld measuring instrument **HMG 01** 230

Handheld measuring instrument **HMG 10** 231

Thermostat valve bodies **VarioQ**, adjustable, with measuring function (measured balancing) 232

Radiator lockshield valves **type 454Q**, with measuring function 237

Combination blocks **VarioQ-Kombi**, adjustable, with measuring function 240

Screw fittings with measuring function **Q** 243

Dynamic thermostat valve bodies and thermostat combination blocks **Vario-DP** (automatic balancing) 245

RADIATOR CONNECTION

Thermostat valve bodies **Vario** 249

Radiator lockshield valves **type 456,** adjustable 253

Thermostat combination blocks **Vario THK**, adjustable 256

Thermostat control heads 260

Adapters and conversion information **thermostat control heads** from year of manufacture 1975 265

Valves and control technology for radiators and hydraulic balancing at a glance

		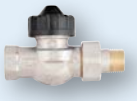 Vario	Vario-DP	VarioQ	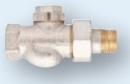 Type 456	Type 454Q
		Radiator lockshield valves			Radiator lockshield valves	
Radiator	Application areas	•	•	•	•	•
Underfloor/panel heating systems		•	•	•	•	•
Refrigeration/air conditioning		•	•	•	•	•
Hydraulic Balancing		•	•	•	•	•
Vario	Control insert	•	•	•		
Adjustment spindle					•	
M	Volume range	•	•	•	•	•
Measuring function	Functions			•		•
Adjustable		•	•	•	•	
Can be shut off		•	•	•	•	•
Can be drained		•		•	•	•
Replaceable insert		•	•	•	•	•
Dimension (DN)	Connection	10-20	10-20	10-20	10-25	10-15
Thread		•	•	•	•	•
Screw connection		•	•	•	•	•
Thermostat head	Control/drive	•	•	•		
Thermal actuator 24 V, 230 V, 0–10 V		•	•	•		
Motor-driven actuator		•	•	•		
2-point/3-point		•	•	•		
4–20 mA		•	•	•		
PWM		•	•	•		
LON		•	•	•		
		Page 249	Page 245	Page 232	Page 253	Page 237

8

i

Technical specifications, application areas and suitability depend on the product version. See catalogue data sheet and/or operating instructions for options and details.

AFRISO

Vario THK	Vario-DP Kombi	VarioQ-Kombi	Q
Tap blocks			Screw fittings with measuring function
•	•	•	
			•
			•
•	•	•	•
•	•		
		•	
•	•	•	•
		•	•
•	•	•	
•	•	•	
•	•	•	
•	•	•	
15	**15**	**15**	**15**
•	•	•	•
•	•	•	•
•	•		
•	•		
•	•		
•	•		
•	•		
•	•		
Page 256	**Page 245**	**Page 240**	**Page 243**

8

Valves and control technology for radiators and hydraulic balancing

AFRISO offers a broad range of proven products comprising standard valve bodies with suitable thermostat control heads and lockshield valves, combination blocks for compact radiators and adjustable radiator with measuring function for optimising existing heating systems and hydraulic balancing. Convincing solutions are also available for automatic hydraulic balancing with pressure-independent dynamic radiator valves.

GAMPPER Armaturen has been a member of the AFRISO group since 2012, contributing professional control technology and clever solutions for HVAC professionals to our product range. The brand GAMPPER has been a synonym for radiator fittings "Made in Germany" for more than 75 years.

Gampper
Member of AFRISO Group

Our comprehensive experience in the areas of domestic technology and building equipment and automation results from single-family home projects all the way to large-scale reference projects. GAMPPER assists planners with full-scale engineering in large projects: Engineering data (such as VDI 3805 records), plant engineering or transparent project logistics via HVAC wholesalers. The OEM business covers the entire range from custom-specific development to production at the Alsenz site. Decades of cooperation in associations and institutions working on and preparing standards and legislation ensure that our products are state-of-the-art

Gampper is:

- The first manufacturer who used virtually maintenance-free O rings instead of high-maintenance packings to seal the valve spindle of manual valves.
- The inventor of the radiator lockshield valve that can be shut off, adjusted and drained.
- The first manufacturer of thermostat valves to receive the top grade for control performance from "Stiftung Warentest", the renowned, independent German consumer organisation.
- The inventor of the patented, adjustable radiator thermostat valves VarioQ with measuring function that allow hydraulic balancing of existing heating, refrigeration and air conditioning systems.
- Numerous other innovations attesting to global success: patens for tap blocks and combination blocks for valve radiators or combined thermostat valves with integrated return temperature limiter for bathroom radiators and underfloor heating systems.

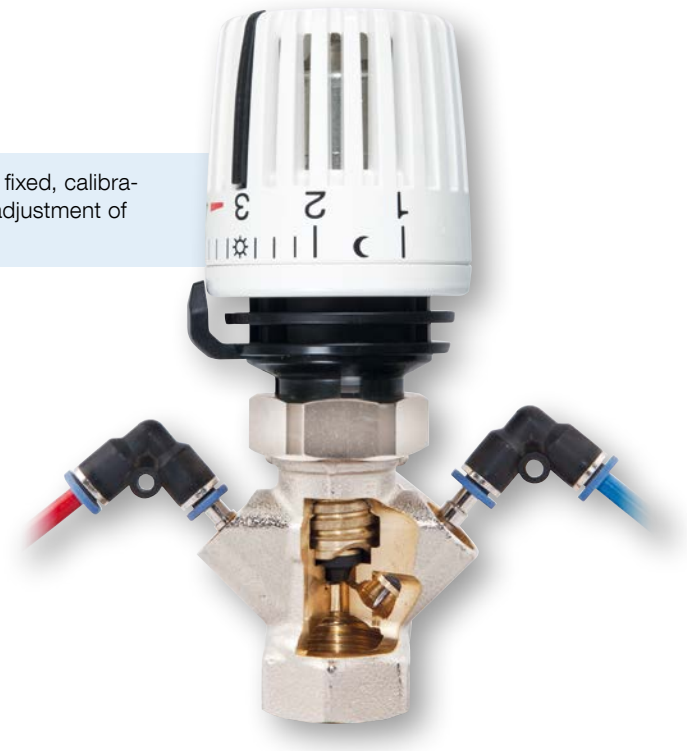

Patented thermostat valve VarioQ with fixed, calibrated measuring unit for high-precision adjustment of radiators.

Solutions for hydraulic balancing of existing systems:

1. Compact radiator with thermostat control head 322 KH and adjustable combination block VarioQ-Kombi with measuring function
2. Manifold system for underfloor heating systems ProCalida with screw fitting with measuring function Q
3. Valve radiator with adjustable thermostat valve body with measuring function VarioQ, thermostat control head 323 KH and radiator lockshield valve type 456

Hydraulic balancing: Highest efficiency, maximum energy saving and comfort

Has your heating system been balanced?

On its way to the radiators and back to the boiler, the hot water flow always chooses the path of least resistance. Due to this natural law, in heating systems without hydraulic balancing radiators further away from the pump are supplied with insufficient amounts of hot water while radiators close to the pump receive too much hot water. Typical countermeasures such as increased pump capacities or higher flow temperatures do not improve this situation, but rather amplify the negative effects. Such systems consume much more energy than necessary without providing the expected convenience.

Consequences of lack of hydraulic balancing:

- Uneven heat release
- Heating times of rooms/apartments differ
- Thermostat valves cannot properly control the room temperature
- Limited frost protection
- Disturbing flow noise in valves and pipes
- Excessive power consumption due to oversized and/or incorrectly set circulation pumps
- High losses when the heating system starts or is not used
- Low efficiency of condensing systems: Excessive flow through radiators close to the pump leads to high return temperatures and reduces the condensation effect (energy recovery during condensation of the flue gas)

What is hydraulic balancing?

Hydraulic balancing ensures optimum distribution of the water in the heating system. Based on the actual heat requirements of the building, the circulation pump, the control (flow temperature), the fittings and the valves are adjusted to change the volume flow in the pipes in such a way as to obtain the required flow resistance for all radiators. This forces the hot water to flow through the system exactly as required. The right method and suitable components allow for considerable savings. In individual cases, this may amount to as much as 15% and more of the annual heating capacity.

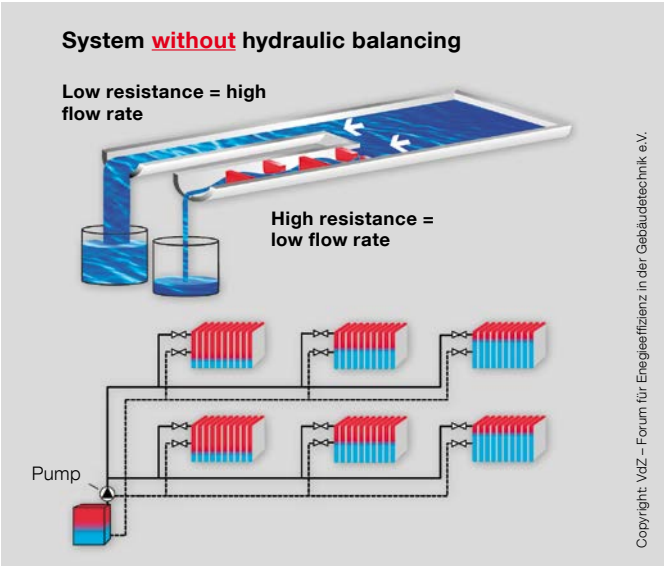

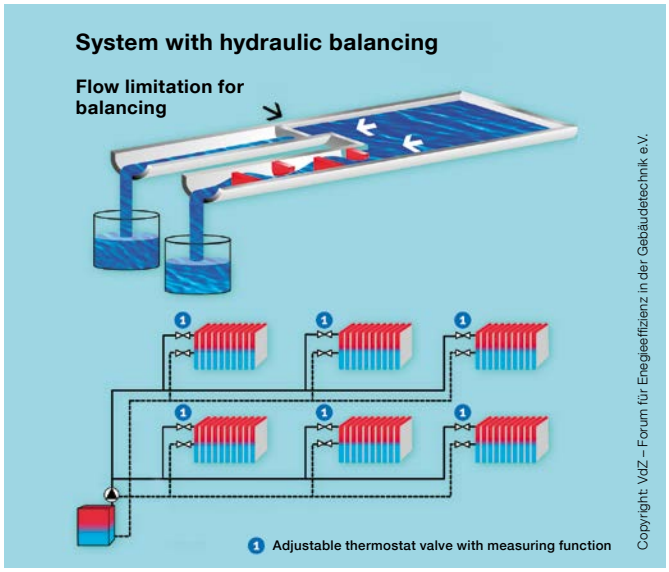

Advantages – your benefits

- Convenience: Rooms are heated evenly
- Radiators respond quickly to new thermostat valve settings
- Maximum frost protection safety
- No flow noise in the heating system
- Heating system/pump operate with maximum efficiency to save energy
- Increased system reliability
- Improved energetic quality of the building
- Reduced energy consumption saves money and protects the environment due to less emission

Legal obligations hydraulic balancing

In Germany, hydraulic balancing is mandatory, as stipulated by the German VOB, part C (German Construction Contract Procedures), DIN 18380 as well as the German EnEV (Energy Savings Ordinance).

Fast and easy hydraulic balancing

In existing buildings, hydraulic balancing often involves a lot of estimating and approximation since precise information on the pipe system is unavailable. In old buildings, the lengths and diameters of pipes are often not sufficiently documented, the pipe systems have been changed or there are different levels of renovation. In such cases, a fundament prerequisite is missing.

AFRISO offers two systems for hydraulic balancing. In both cases, the heating system expert adjusts the heat distribution directly at each radiator by limiting the amount of hot water at the adjustable thermostat valves - without additional adjustment fittings. The decision as to which system is most suitable for a given building depends on a variety of factors and requirements:

Automatic hydraulic balancing for the HVAC professional

The system Vario-DP

Pre-adjustable thermostat valves Vario-DP with patented dynamic valve insert for automatic limitation of the water volume set at the valve. Vario-DP controls the water volume independent of pressure variation in the heating system. Therefore, Vario-DP ensures that the right water volume is always supplied to the radiator, regardless of the number of open or closed thermostat valves in the system.

8

Your benefits:

- Automatic control of water volume
- Adjusted flow is not exceeded
- Building type: Primarily for single-/two-family homes, residential buildings
- Fast hydraulic balancing without measuring instrument
- Wide range of products, easy planning
- High reserve due to wide adjustment range up to 340 l/h
- Geometry of valve insert provides protection against unwanted pollution, failure due to blocking is practically impossible

Valve range Vario-DP

The control membrane is installed directly in the valve insert and the valve spindle is used as the pressure sensor – therefore, there are no additional control components which might be subject to pollution. The valve operates with a standard valve gasket and does not require additional dirt filters.

Hydraulic balancing with measurement function for the HVAC system planner

The triple-stage VarioQ system

The pre-adjustable VarioQ thermostat valves with measurement function allow for an even more precise approach to hydraulic balancing. The triple-stage system optimises the heating system on the basis of calculation, measurement and adjustment. Thanks to an integrated, fixed measuring unit, it is possible to directly measure the current flow and adjust the calculated water volume at each radiator valve or at the lockshield valve.

Your benefits:

- Precise measurement and adjustment of the required water volume per radiator.
- Building type: Primarily for public buildings, schools, administration buildings and generally for larger heating systems
- Reliable procedure for larger and complex heating systems
- Measurement option at the valve for documentable and verifiable adjustment
- Time and cost savings: Neither dynamic valves nor line fittings are required
- Up to 80 % savings with regard to pump capacity as compared to automatically balanced heating systems
- Further optimisation potential due to, for example, fewer burner starts or increased condensing effect

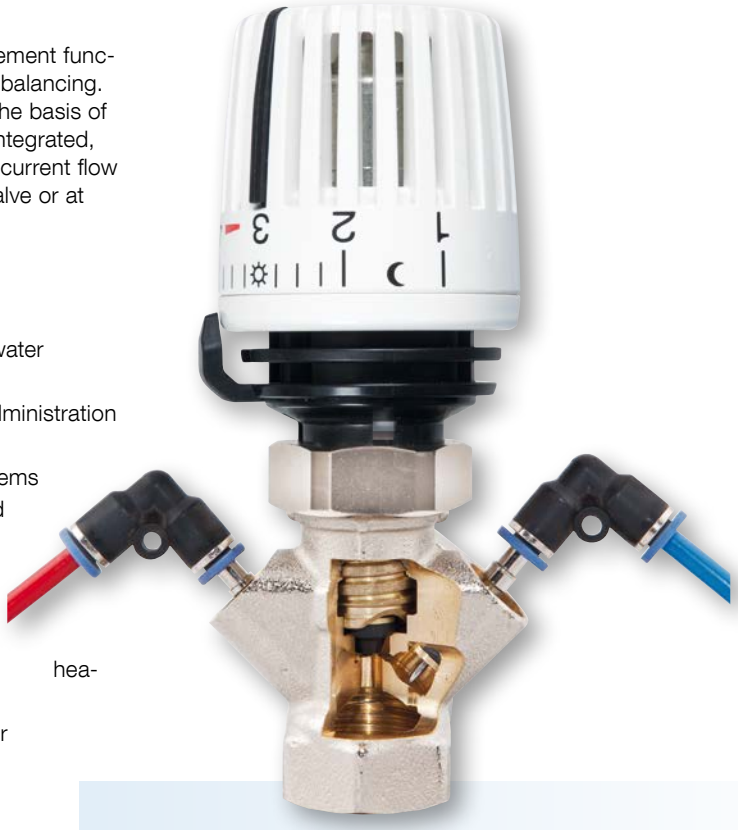

Valve range VarioQ

The fixed measuring unit of VarioQ allows for the precise adjustment of the water volume at the valve of the radiator. The pre-adjustable thermostat valves feature a fixed, calibrated measuring unit for adjustment of the volume flow directly at the valve.

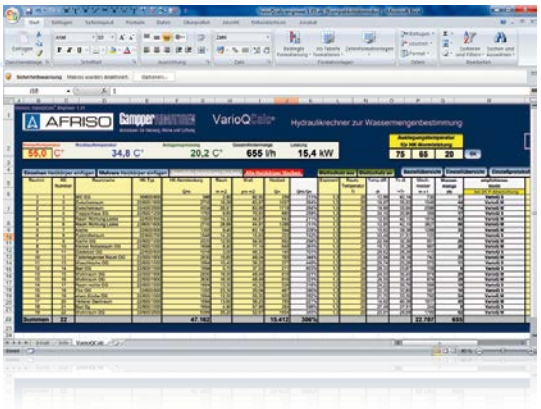

Calculation software VarioQCalc

The easy-to-use software determines the required optimum water volume as well as the VarioQ valves for each radiator. Only the flow temperature of the system, the radiator capacity and the heat requirements of the rooms to be heated are needed as a basis for the calculation. Parameters and estimated values of the pipe system do not have to be considered.

Measuring instrument HMG 10

HMG 10 receives its data from VarioQCalc via a USB interface. The measuring instrument measures the flow rate in litres per hour and the water volume can be easily set at the valve without conversion.
In addition, all standard measuring valves and line fittings are stored and can be intuitively selected via the graphical user interface.

Calculation software VarioQCalc

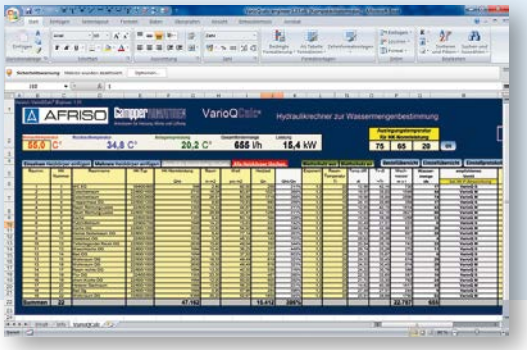

- **Calculation software for hydraulic balancing**
- **Fast, easy calculation without knowledge of the pipe system**
- **Valve selection with ordering and adjustment list**
- **Easy operation, MS Excel as software basis**
- **Direct data transmission to handheld measuring instrument HMG 10**

Application

Calculation software for hydraulic balancing. Determination of the required optimum water volume, system spread and selection of the VarioQ valves needed for all individual radiators for optimisation of the flow temperature and the pump capacity in heating systems. Implementing the optimisation calculated with VarioQCalc results in a continuous, permanent condensing effect.

Description

VarioQCalc is based on MS Excel so that it is very easy to use without requiring any special knowledge. Only the flow temperature of the system, the radiator capacity and the heat requirements of the rooms to be heated are needed as a basis for the calculation. Ideally, the heating load is re-calculated or determined via the room sizes using reference values. Considering incorrectly rated radiators (too small or large), it precisely determines the required water volume per radiator, selects the suitable VarioQ valves, generates adjustment recommendations and creates an order list for purchasing from your wholesaler.

The calculated individual spread of the radiator as well as the spread of all radiators together (system spread) allows the heating system professional to determine the extent to which the potential of the boiler is used. The system can be optimised in addition to hydraulic balancing by means of changing the flow temperature: The effects on total spread, spread of the individual spread of the radiators and total volume flow become immediately visible.

The calculated water volume and adjustment recommendation per radiator can be directly transmitted to the handheld measuring instrument HMG 10 (USB) for adjustment of the valves. Measured values can be returned for documentation and certification purposes.

Software information

Calculation results

- Radiator/total water volume
- Radiator/system spread
- Valve recommendation
- Adjustment recommendation
- Order list
- Documentation

Optimisation potential

- Flow temperature
- Radiator capacity
- Condensing effect

System requirements

- PC
- WINDOWS operating system
- MS Excel 2007, 2010, 2013

i

Free download of VarioQCalc at www.afriso.de/varioqcalc

Calculation software VarioQCalc

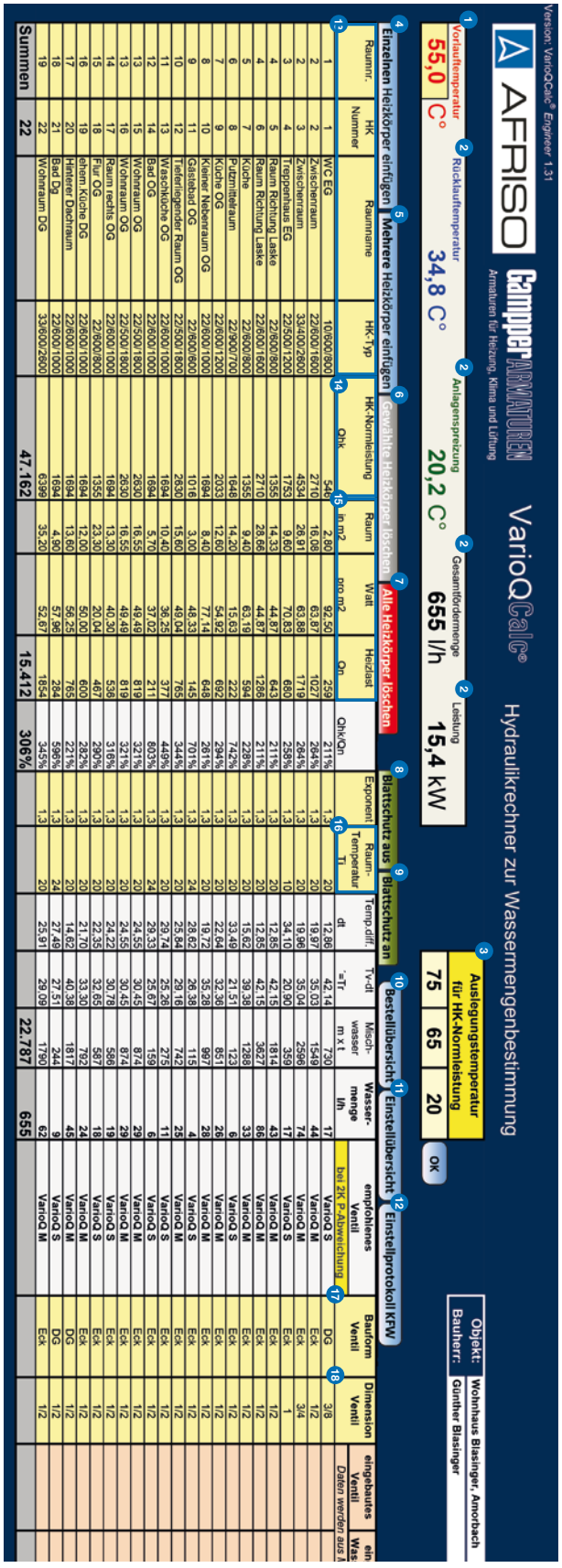

* Use only this function to delete radiators since formulas in adjacent cells may be affected if you use the MS Excel standard functions for inserting or deleting cells.

i

Free download of VarioQCalc at www.gampper.de/varioqcalc

1. **Flow temperature**
   Flow temperature at which the system is operated/to be operated.
2. **Return temperature, system spread, total supply volume, capacity** are calculated by the program
3. **Design temperature for radiator's standard capacity**
   System temperature from radiator table at which the standard capacity is specified. Click "OK" after entering the temperatures.
4. **Insert single radiator**
   Inserts a new row with all required formulas. If you have not yet entered radiator information, the system displays ### or #Value!
5. **Insert multiple radiators**
   Prompts for the number of radiators to be inserted. Inserts the corresponding new rows with all required formulas. If you have not yet entered radiator information, the system displays ### or #Value!
6. **Delete selected radiators**
   The selected radiators are deleted.*
7. **Delete all radiators**
   Project is reset. CAUTION! All radiators are deleted.
8. **Worksheet protection off**
   Enables entries in all cells.
9. **Worksheet protection on (default)**
   Locks all cells required for calculation so they cannot be deleted/overwritten.
10. **Order overview**
    Creates a list of the valves recommended for the order. Contains quantities and part numbers.
11. **Adjustment overview**
    Generates an overview of the base settings of the valves during mounting for printing.
12. **Adjustment report for KFW**
    Generates a report after adjustment for application for KFW funds (Germany).
13. **Room no., radiator no., radiator type**
    Cells to be used for describing the radiator.
14. **Standard capacity**
    Enter the standard capacity of the radiator according to the design temperature (see above). The standard capacities of the most typical radiators are stored (75/65/20).
15. **Room in m², Watt per m², heating load method 1 (VarioQCalc standard)**
    Measuring the room, calculating the area, determining the heat requirement per m², VarioQCalc calculates the heating load.
    Method 2 (recommended)
    Calculate the heating load by means of appropriate software, enter the values in the Heating Load column (in this case, it is not necessary to enter the values for room in m² and Watt per m²).
16. **Room temperature**
    Required room temperature.
17. **Valve design**
    Enter one of the following designs: angled, DG, Kombi angled, Kombi DG, RLV angled, RLV DG.
18. **Valve dimensions**
    Enter one of the following dimensions: ⅜ – ½ – ¾.

Handheld measuring instrument for hydraulic balancing HMG 01

- **Hydraulic balancing directly at the radiator with VarioQ valves**
- **Simple measuring instrument for line fittings**
- **Measurement/check of differential pressure and flow rate**
- **For heating circuit water and media of other densities**

Application

For differential pressure measurement and flow rate adjustment in heating and refrigerating systems during hydraulic balancing. To be used in conjunction with VarioQ thermostat valves and combination blocks. If VarioQ valves are used, hydraulic balancing can be done directly at the radiator. It is neither necessary to know the pipeline system nor to perform complex calculations.

Description

HMG 01 is a simple, lightweight handheld measuring instrument with a display for visualisation of the results of measurements. The flow coefficients of the valves with measuring function can be manually set via the keypad (valve bodies VarioQ S, M, L are stored in the memory); the flow rate at the valve can be displayed and the water volume can be easily set at the VarioQ valve without conversion. The measured flow rate and pressure values can be displayed in various units. HMG 01 features an intuitive calibration function for zero calibration.

8

Technical specifications

Measuring range
0/1,000 kPa / 0/10 bar

Max. overpressure
- side: 1,000 kPa / 10 bar
+ side: 1,500 kPa / 15 bar

Operating temperature range
Ambient/storage: -5/+50 °C
Medium: -5/+90 °C

Weight
380 g

Dimensions
W x H x D: 94 x 218 x 40 mm

Display
Backlit display
128 x 64 Pixel

Connection
2 x plug connection (red/blue)

Supply voltage
2 x 1.2 V AA batteries (rechargeable)

Options
- Hose kit for line fittings
- Measuring needles for line fittings

Scope of delivery
Measuring instrument with calibration report, 2 x batteries, 1 pair of measuring hoses for connection of VarioQ valves, adapters and accessories for connection to the system to be balanced, mounting tools

DG: H, PG: 4	Part no.	**Price €**
HMG 01	**68785**	
Spare parts		
Hose kit Gampper for AFRISO/Gampper valves with quick-action coupling, measuring needles and sintered plastic filter	480 010.801	
Measuring needles	480 000.805	
Measuring hose kit for line valves with quick-action coupling and sintered plastic filter (2 pieces)	480 000.801	
De-aeration adapter for measuring hoses	480 010.806	
Kit sintered plastic filter and O ring	480 000.808	

Handheld measuring instrument for hydraulic balancing HMG 10

- **Lightning-fast hydraulic balancing at the radiator with VarioQ valves**
- **Software-supported measurement/check of differential pressure and flow rate**
- **Characteristic curves of standard line valves and radiator valves stored in the software**
- **For heating circuit water and media of other densities**

Application

For differential pressure measurement and flow rate adjustment in heating and refrigerating systems during hydraulic balancing. To be used with VarioQ thermostat valves, VarioQ combination blocks or standard line fittings with measuring function (such as Gampper Vanitus Eco / Vanitus L). If VarioQ valves are used, hydraulic balancing can be done directly at the radiator. It is neither necessary to know the pipeline system nor to perform complex calculations.

Description

HMG 10 is an ergonomic, lightweight handheld measuring instrument. A large, backlit colour display allows for convenient visualisation of all measurement results. All standard measuring valves are stored and can be intuitively selected via the graphical user interface. The measuring instrument measures the flow rate in litres per hour and the water volume can be easily set at the VarioQ valve without conversion. HMG 10 offers a great variety of features for storing pressure and flow data. It is possible to manage a total of 1,200 records.

HMG 10 uses all data and calculation results from VarioQCalc and returns all measured and adjusted values of the balancing procedure for documentation purposes. In addition, projects can be defined with the PC software as required and then transferred to the memory of HMG 10. A mini USB port is provided for communication and battery charging. HMG 10 features an intuitive calibration function for zero calibration.

8

Technical specifications

Measuring range
0/1,000 kPa / 0/10 bar

Max. overpressure
1,200 kPa / 12 bar

Operating temperature range
Ambient/storage: -5/+50 °C
Medium: -5/+90 °C

Hours of operation
Max. 12 hours

Weight
420 g

Dimensions
W x H x D: 80 x 180 x 52 mm

Display
Backlit colour display
240 x 320 pixels

Connection
2 x plug connection (red/blue)

Supply voltage
Lithium-ion battery 950 mAh

Scope of delivery
Measuring instrument with calibration report, USB charging adapter, 2 pairs of measuring hoses for connection of VarioQ valves and line fittings, adapters and accessories for connection to the system to be balanced, mounting tools, USB data cable, USB flash drive with PC software

DG: H, PG: 4	Part no.	**Price €**
HMG 10	**68794**	
Spare parts		
Hose kit Gampper for AFRISO/Gampper valves with quick-action coupling, measuring needles and sintered plastic filter	480 010,801	
Measuring needles for VarioQ valves (2 pieces)	480 010,804	
Measuring hose kit for line valves with quick-action coupling and sintered plastic filter (2 pieces)	480 000.801	
De-aeration adapter for measuring hoses	480 010.806	
Kit sintered plastic filter and O ring	480 000.808	

Thermostat valve bodies VarioQ

- **Fixed, calibrated measuring unit for accurate adjustment of the radiator**
- **Fully adjustable**
- **Valve insert can be replaced without system having to be drained**
- **Lightning-fast hydraulic balancing with series HMG measuring instruments**

A Page 231

A Page 253

A Page 260

Application

For measuring and adjusting the volume flow directly at the valve, e.g. with the measuring instruments HMG 01/10/100 for hydraulic balancing. Suitable for small, medium and large water volumes. For installation in dual-pipe heating systems. Design as per standard, therefore, installation in existing systems without changes to the connection pipes.

Description

Patented, low-noise thermostat valve body with fixed, calibrated measuring unit for measuring and adjusting the volume flow directly at the valve. Mounting cap with valve shut-off function. Threaded connection M 30 x 1.5 mm for thermostat control heads and actuators. Fully adjustable with ES-SV adjustment key. Valve spindle with double O ring seal. The valve insert can be replaced with the MGV mounting unit at operating pressure without the system having to be drained.

VarioQ is a triple-stage hydraulic balancing system which allows for optimisation of the heating pipe system by means of calculation, measurement and adjustment. The free VarioQCalc software automatically determines the optimum water volume per radiator and selects the required VarioQ valves. This information is transferred to the HMG 10/HMG 100 measuring instrument via USB data cable. The measuring instrument measures the flow rate in litres per hour and the water volume can be easily set at the valve without conversion. Even minimum flow rates can be set with this system.

Technical specifications

System connection
See ordering table

Thermostat head/actuator connection
Threaded connection M 30 x 1.5 mm

Nominal pressure
Max. 10 bar

Nominal diameter
DN 10, DN 15, DN 20

Operating temperature range
Medium: T_{max} = 120 °C

Housing
VarioQ S-L: Brass, nickel-plated

Option
- Version PN 16

i

In the case of axial version or angled-angled version (left/right), use valve body Vario (axial) or Vario angled-angled (left/right) with lockshield valve with measuring function 454 Q.

See page 235 for prices.

Thermostat valve bodies VarioQ

Measuring points volume flow – VarioQ section

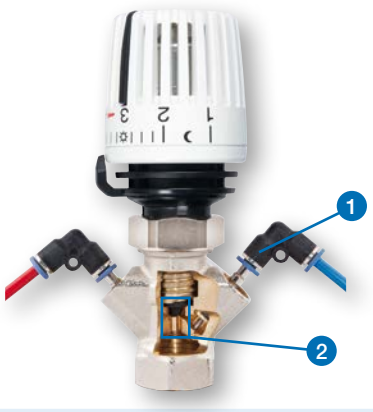

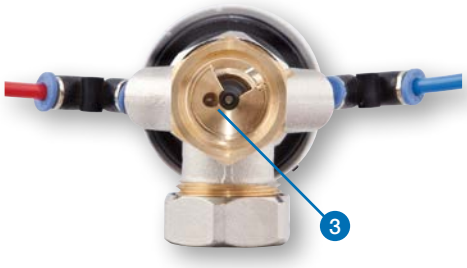

1 Measuring point P2 downstream of measuring unit
2 Fixed, calibrated measuring unit
3 Measuring point P1 upstream of measuring unit

Valve pre-adjustment

VarioQ thermostat valves are fully adjustable by means of the ES-SV adjustment key, starting with the open position (8 = open), see adjustment key for numbers 1–8. Mark and counter-mark are aligned. Each ⅛ of a turn corresponds to one flow characteristic, shown in a diagram (see operating instructions).

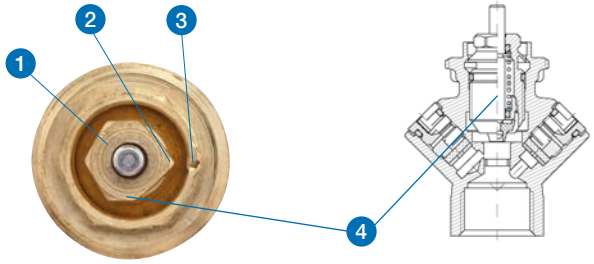

1 Marking
2 Counter-mark
3 Mark
4 Valve insert

Type overview

Valve type	Marking at valve insert	Colour of mounting cap	Flow rate range in l/h*	
			Min.	Max.
VarioQ S	1 ring/red	Red	6	80
VarioQ M	2 rings	Black	20	260
VarioQ L	3 rings/green	Green	20	400

*The measurable flow rate is much higher than the adjustable range of the valves. The flow rate ranges for the VarioQ valves are shown in the ordering table.

Thermostat valve bodies VarioQ

Types and dimensions as per EN 215, series D

VarioQ S, M, L – angled

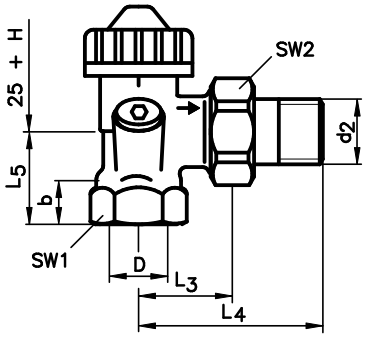

VarioQ S, M, L – straight

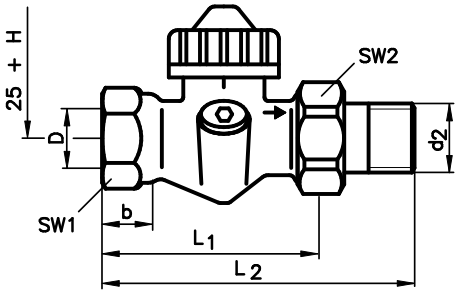

Dimensions (mm) VarioQ S, M, L

DN	D	d_1	d_2	Spanner size SW1	Spanner size SW2	H	b min	L_1 ±2	L_2 ±2	L_3 ±1	L_4 ±1.5	L_5 ±1.5	L_6	L_7	L_8
10	Rp⅜	-	R⅜	22	27	= Height control head	10.1	59	85	26	52	22	74	26	40
15	Rp½	G¾	R½	27	30		13.2	66	95	29	58	26	82	29	42
20	Rp¾	-	R¾	32	37		14.5	74	106	34	66	29	96	34	53

Thermostat valve bodies VarioQ

DG: V, PG: 2	Version	Nominal diameter	Connection	Flow coefficient* (m^3/h)	Flow coefficient NS** (m^3/h)			Part no.	**Price €**
VarioQ S for small water volumes									
	Angled	DN 10	Rp⅜ x R⅜	0.019 - 0.24	0.25	1	35	**181 110.101**	
		DN 15	Rp½ x R½			1	30	**181 120.101**	
		DN 20	Rp¾ x R¾			1	25	**181 130.101**	
	Straight	DN 10	Rp⅜ x R⅜	0.019 - 0.24	0.25	1	35	**181 160.101**	
		DN 15	Rp½ x R½			1	30	**181 170.101**	
		DN 20	Rp¾ x R¾			1	25	**181 180.101**	
VarioQ M for medium water volumes									
	Angled	DN 10	Rp⅜ x R⅜	0.044 - 0.46	0.68	1	35	**181 210.101**	
		DN 15	Rp½ x R½			1	30	**181 220.101**	
		DN 20	Rp¾ x R¾			1	25	**181 230.101**	
	Straight	DN 10	Rp⅜ x R⅜	0.044 - 0.46	0.68	1	35	**181 260.101**	
		DN 15	Rp½ x R½			1	30	**181 270.101**	
		DN 20	Rp¾ x R¾			1	25	**181 280.101**	
VarioQ L for large water volumes									
	Angled	DN 10	Rp⅜ x R⅜	0.125–0.51	0.94	1	-	181 310.101	
		DN 15	Rp½ x R½			1	-	181 320.101	
		DN 20	Rp¾ x R¾			1	-	181 330.101	
	Straight	DN 10	Rp⅜ x R⅜	0.125–0.51	0.94	1	-	181 360.101	
		DN 15	Rp½ x R½			1	-	181 370.101	
		DN 20	Rp¾ x R¾			1	-	181 380.101	

* The flow coefficient corresponds to the water flow in m^3/h through the valve at a given valve stroke (proportional offset, e.g. 1 K or 2 K) and a differential pressure of 1 bar.
** The flow coefficient NS is the flow coefficient of the valve at nominal stroke (100 % open).
***Extra charge added to standard version in €. Replace the specified digit in the standard part number with this number when ordering.

8

Thermostat valve bodies VarioQ

Accessories for thermostat valve bodies VarioQ

DG: V	Description	PG			Part no.	**Price €**
	Adjustment key ES-SV, for valve bodies Vario and VarioQ	1	1	40	**140 110.850**	
	Valve insert S for DN 10–DN 20	2	1	-	140 110.221	
	Valve insert M for DN 10–DN 20	2	1	-	140 210.221	
	Valve insert L for DN 10–DN 20	2	1	-	140 310.221	
	Mounting unit MGV for replacing the valve inserts Vario, VarioQ and Vario-DP	2	1	2	140 110.860	

8

Radiator lockshield valves type 454Q

- **Fixed, calibrated measuring unit for accurate adjustment of the radiator**
- **Individual radiators can be drained without the system having to be shut off**
- **Lightning-fast hydraulic balancing with series HMG measuring instruments**

A Page 231

A Page 249

A Page 239

Application

For measuring the volume flow directly at the screw fitting, e.g. with the measuring instruments HMG 01/10/100 for hydraulic balancing. Suitable for small and medium water volumes. For installation in single-pipe and dual-pipe heating systems. Adjustments are made e.g. via the adjustable thermostat valve Vario in the flow.

Description

Radiator lockshield valve with measuring function type 454Q with drain and adjustment function. Measurement via an integrated, fixed and calibrated measuring unit. With cap to protect against incorrect operation. The optional filling and draining unit FEV 03 with hose connection ½" can be used for easy and fast draining.

The radiator lockshield valve is a part of the product range for the triple-stage balancing system VarioQ which allows for optimisation of the heating pipe system by means of calculation, measurement and adjustment. The free VarioQCalc software automatically determines the optimum water volume and selects the required lockshield valves. This information is transferred to the HMG 10 or HMG 100 measuring instrument via USB data cable. The measuring instrument measures the flow rate in litres per hour. Even minimum flow rates can be set with this system.

Technical specifications

System connection
See ordering table

Nominal pressure
Max. 10 bar

Nominal diameter
DN 10, DN 15

Operating temperature range
Medium: T_{max} = 120 °C

Housing
Gunmetal, nickel-plated

i

Please use valve body to adjust the water volume.

See page 243 for prices.

Radiator lockshield valves type 454Q

Types and dimensions (mm) as per DIN 3842

Type 454Q S, M – angled

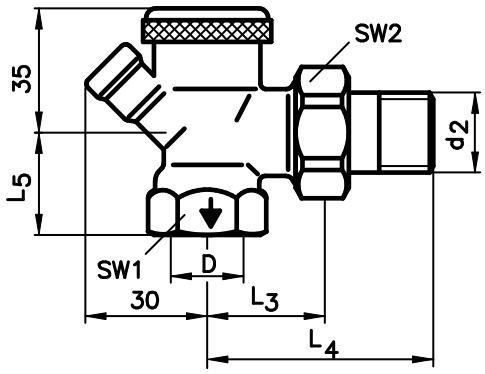

Type 454Q S, M – straight

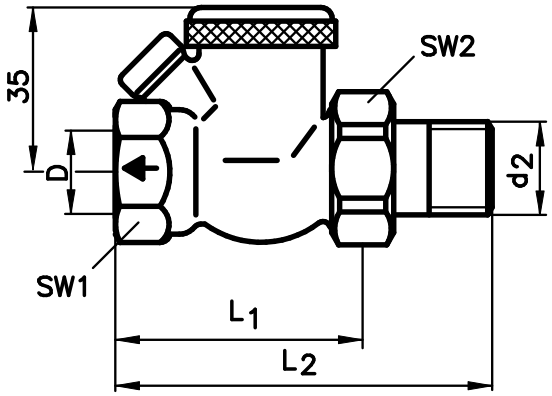

Dimensions (mm)

DN	D	d_2	Spanner size SW1	Spanner size SW2	L_1 ±2	L_2 ±2	L_3 ±1	L_4 ±1.5	L_5 ±1.5
10	Rp⅜	R⅜	22	27	49	75	26	52	22
15	Rp½	R½	27	30	51	80	29	58	26

Radiator lockshield valves type 454Q

DG: V, PG: 2	Version	Nominal diameter	Connection	Flow coefficient NS* (m^3/h)			Part no.	**Price €**
454Q S for small water volumes, measuring range 20–400 l/h								
	Angled	DN 10	Rp⅜ x R⅜	0.38	1	-	479 011	
		DN 15	Rp½ x R½	0.38	1	40	**479 021**	
	Straight	DN 10	Rp⅜ x R⅜	0.38	1	-	479 061	
		DN 15	Rp½ x R½	0.38	1	40	**479 071**	
454Q M for medium water volumes, measuring range 20–400 l/h								
	Angled	DN 10	Rp⅜ x R⅜	1.04	1	-	479 012	
		DN 15	Rp½ x R½	1.04	1	40	**479 022**	
	Straight	DN 10	Rp⅜ x R⅜	1.04	1	-	479 062	
		DN 15	Rp½ x R½	1.04	1	40	**479 072**	

* The flow coefficient corresponds to the water flow in m^3/h through the valve at a given valve stroke (proportional offset, e.g. 1 K or 2 K) and a differential pressure of 1 bar. The flow coefficient NS is the flow coefficient of the valve at nominal stroke (100 % open).

8

Accessories for radiator lockshield valves type 454Q

DG: V	Version			Part no.	**Price €**
	Filling and draining unit FEV 03 For type 454Q S and M as well as VarioQ-Kombi	1	-	422 520.810	

Combination blocks VarioQ-Kombi for compact radiators with valve

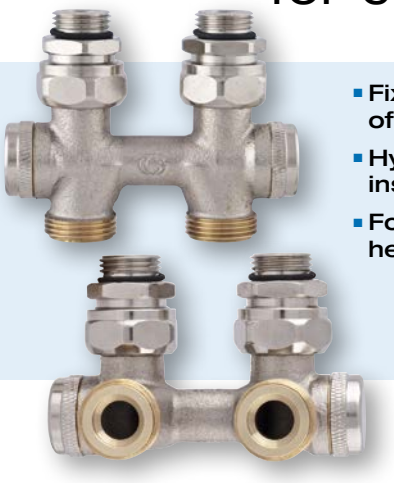

- **Fixed, calibrated measuring unit for accurate adjustment of the radiator**
- **Hydraulic balancing with series HMG measuring instruments**
- **For wall or floor connection, also suitable for baseboard heating systems**

A Page 231

A Page 242

Application

For measuring the volume flow directly at the radiator, e.g. with the measuring instruments HMG 01/10/100 for hydraulic balancing. Suitable for small and medium water volumes. For connection to compact radiators with valve with an axis distance of 50 mm in dual-pipe heating systems. Adjustments are made either via the adjustable valve insert in the compact radiator or via the VarioQ combination block.

Description

Adjustable combination block with measuring function VarioQ-Kombi with drain and shut-off feature. The volume flow is measured via an integrated, fixed and calibrated measuring unit. With cap to protect against incorrect operation.

VarioQ-Kombi is a part of the product range for the triple-stage balancing system VarioQ which allows for optimisation of the heating pipe system by means of calculation, measurement and adjustment. The free VarioQCalc software automatically determines the optimum water volume per radiator and selects the required combination blocks. This information is transferred to the HMG 10 measuring instrument via USB data cable. The measuring instrument measures the flow rate in litres per hour. Even minimum flow rates can be set with this system.

Technical specifications

System connection (valve radiators)
G¾ eurocone or G½ female thread

Nominal pressure
Max. 10 bar

Nominal diameter
DN 15

Operating temperature range
Medium: T_{max} = 120 °C

Housing
Gunmetal, nickel-plated

i
See page 242 for prices.

Combination blocks VarioQ-Kombi for compact radiators with valve

Types and dimensions (mm)

VarioQ-Kombi S, M – angled

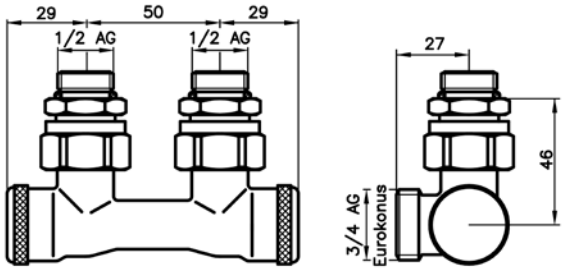

VarioQ-Kombi S, M – straight

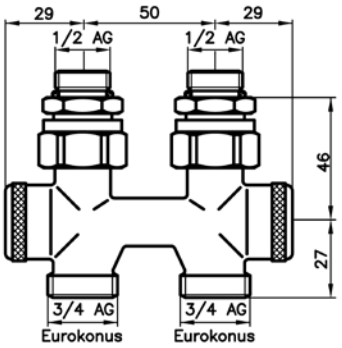

Adapter for radiators with R½ female thread

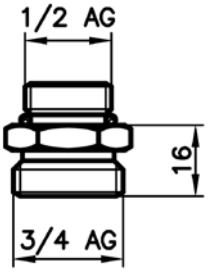

8

Combination blocks VarioQ-Kombi for compact radiators with valve

DG: V, PG: 2	Version	Nominal diameter	Radiator connection	Flow coefficient* (m^3/h)			Part no.	**Price €**
VarioQ-Kombi S for small water volumes								
	Angled	DN 15	G½ female thread	0.25	1	-	423 821	
	Straight	DN 15	G½ female thread	0.25	1	-	423 871	
VarioQ-Kombi M for medium water volumes								
	Angled	DN 15	G½ female thread	0.585	1	-	**423 621**	
	Straight	DN 15	G½ female thread	0.585	1	-	423 671	
Accessories								
	Adjustment key Vario Q-Kombi						422 520.800	
	Filling and draining unit FEV 03 For type 454Q, S and M as well as Vario Q-Kombi				1	-	422 520.810	

* The flow coefficient corresponds to the water flow in m^3/h through the valve at a given valve stroke (proportional offset, e.g. 1 K or 2 K) and a differential pressure of 1 bar.

Screw fittings with measuring function Q

- **Measuring insert with fixed, calibrated measuring unit**
- **Ideal for hydraulic balancing of small underfloor/heating circuit manifolds in existing buildings**

Page 231

Application

For measuring the volume flow, e.g. with the measuring instruments HMG 01 or HMG 10 for hydraulic balancing. Versions QM and $QL_{max.}$ are ideal for measuring underfloor heating manifolds and heating circuit manifolds.

Description

Screw fitting with measuring function, straight design, with fixed calibrated measuring unit for measuring the volume flow.

The optimum volume flow is to be determined by means of a calculation program and can then be directly measured and adjusted with the HMG series measuring instruments. Adjustments are made via standard adjustment valves.

8

Technical specifications

System connection
See ordering table

Nominal pressure
M, L_{max}: Max. 16 bar

Nominal diameter
DN 15

Operating temperature range
Medium: T_{max} = 120 °C

Housing
M, L_{max}: Brass/gunmetal

Screw fittings with measuring function Q

DG: V, PG: 2	Version	Nominal diameter	Flow rate range (m^3/h)	Flow coefficient*			Part no.	**Price €**
	Q M for medium water volumes, PN 16, connection G¾ eurocone	DN 15	0.02 – 0.40	1.04	1	-	408 025	
	Q L_{max} for large water volumes PN 16, connection G¾ eurocone	DN 15	0.06 – 1.20	2.85	1	-	408 026	

* The flow coefficient corresponds to the water flow in m^3/h through the valve at a given valve stroke (proportional offset, e.g. 1 K or 2 K) and a differential pressure of 1 bar.

Dynamic thermostat valve bodies, combination blocks Vario-DP

- **Automatic control of water volume**
- **Fast hydraulic balancing without measuring instrument**
- **High reserve due to adjustment range up to 340 l/h**
- **Patented, simple valve insert provides protection against pollution**

A Page 260

A Page 253

Application

The new dynamic thermostat valve Vario-DP makes hydraulic balancing in single and two family homes an easy and fast job.

Description

The patented valve insert with automatic flow limiter automatically limits the water volume adjusted at the valves, independent of pressure variation in the heating system. Therefore, Vario-DP ensures that the right water volume is always supplied to the radiator, regardless of the number of open or closed thermostat valves in the system.
Vario-DP is available in the standard types angled, straight, axial and Wangled-angled with the dimensions ⅜", ½" und ¾" as well as thermostat combination block. The valve insert can be replaced with the MGV mounting unit at operating pressure without the system having to be drained.

8

Technical specifications

System connection
See ordering table

Thermostat head/actuator connection
Threaded connection M 30 x 1.5 mm

Nominal pressure
Max. 10 bar

Differential pressure (Δp)
Max. 50 kPa
Min.: 20 kPa

Nominal diameter
DN 10, DN 15, DN 20

Operating temperature range
Medium: T_{max} = 120 °C

Housing
Gunmetal, nickel-plated

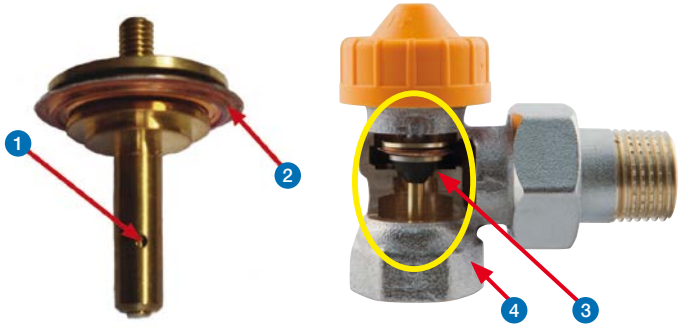

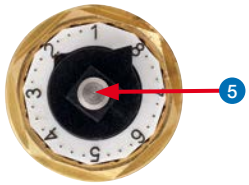

1. P1 = pressure inlet
2. Membrane: Expands at increasing differential pressure
3. Vario-DP: Dynamic valve insert
4. Dimensions valve housing as per EN 215
5. Fully adjustable by means of a usual bleed screw key

Patented valve insert with dynamic flow limiter
Since the control membrane is installed directly in the valve insert and since the valve spindle is used as the pressure sensor, there are no additional control components which might be subject to pollution. The valve operates with a standard valve gasket and does not require additional dirt filters.

i

See page 248 for prices.

Please note the additional information on valve selection (water volume) and mounting in the operating instructions.

Dynamic thermostat valve bodies Vario-DP

Types and dimensions (mm)

Vario-DP – angled

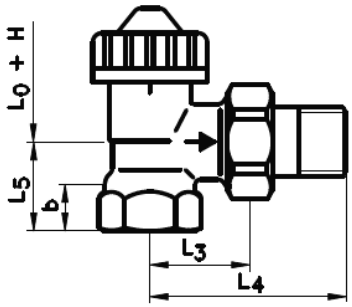

Vario-DP – straight

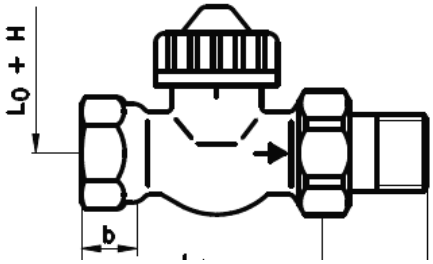

Vario-DP – axial

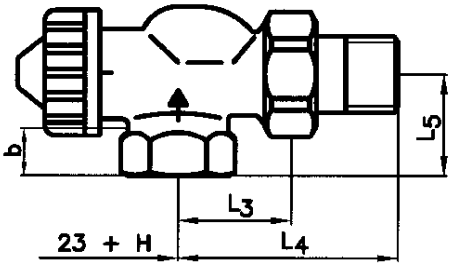

Vario-DP – angled-angled, left

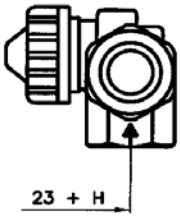

Vario-DP – angled-angled, right

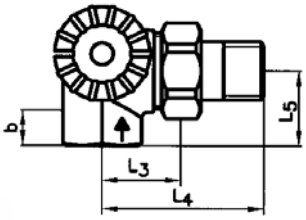

Dimensions (mm) Vario-DP

DN	D	B	L0	L1	L2	L3	L4	L5	L6
10	Rp⅜	10.1	23	59	85	26	52	25	-
15	Rp½	13.2	23	66	95	29	58	26	55
20	Rp¾	14.5	23	74	106	34	66	29	-

Dynamic thermostat combination blocks Vario-DP

Types and dimensions (mm)

Version for compact radiators/bathroom radiators with G½ female thread

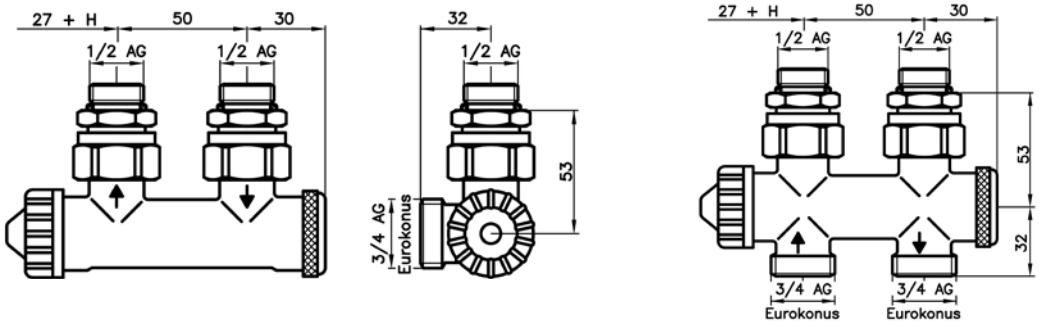

Cover

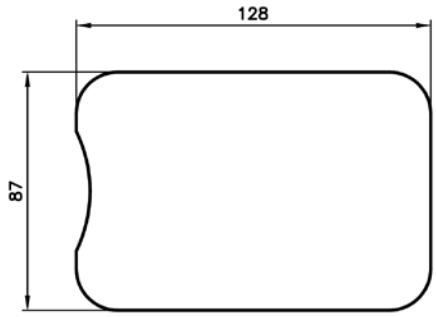

8

Dynamic thermostat valve bodies, combination blocks Vario-DP

DG: V, PG: 2		Connection	Part no.	**Prices €**
Thermostat valve body Vario-DP, pressure-independent thermostat valve with automatic flow limiter automatically maintains the adjusted water volume, control range 20–50 kPa, static below 20 kPa, adjustment range 20–340 l/h, continuously adjustable with standard vent key, housing gunmetal, nickel-plated, PN 10, max. temperature 120 °C, with threaded connection M 30 x 1.5 mm, valve spindle with double O ring seal, sealing element maintenance-free, with mounting cap. Valve insert can be replaced at operating pressure without the system having to be drained.				
	Angled	Rp⅜ x R⅜	**161 010.100**	
		Rp½ x R½	**161 020.100**	
		Rp¾ x R¾	**161 030.100**	
	Straight	Rp⅜ x R⅜	**161 060.100**	
		Rp½ x R½	**161 070.100**	
		Rp¾ x R¾	**161 080.100**	
	Axial	Rp½ x R½	**163 020.100**	
	Winkel-Eck, rechts	Rp½ x R½	**165 020.100**	
	Winkel-Eck, links	Rp½ x R½	**167 020.100**	
Thermostat combination block Vario-DP, for radiators with centre connection in dual-pipe system, valve insert with dynamic flow limiter, pressure-independent thermostat valve automatically maintains the adjusted water volume, control range 20–50 kPa, static below 20 kPa, adjustment range 20–340 l/h continuously adjustable with standard vent key, pre-adjustment immediately readable without scale, brass housing, nickel-plated, PN 10, max. temperature 120 °C, valve spindle with double O ring seal, low-noise, threaded connection M 30 x 1.5 mm, brass shut-off spindle, connections at pipe and with ¾" eurocone.				
Version for compact radiators/bathroom radiators with G½ female thread				
	Straight	G½ female thread	**221 075.100**	
	Angled	R½ female thread	**221 025.100**	
Accessories				
	Valve insert, for thermostat valve bodies of series Vario DP Connection: Rp⅜ x R⅜ and R½ x R½	R⅜"–¾"	**160 020.211**	

Thermostat valve bodies Vario

- **Fully adjustable**
- **Valve insert can be replaced without system having to be drained**
- **Various versions and sizes for virtually any application**

Adjustment key ES-SV

A Page 252 | A Page 232 | A Page 260

Application

Suitable for medium and large water volumes. For installation in dual-pipe central heating systems.

Description

Low-noise thermostat valve body with threaded connection M 30 x 1.5 mm for thermostat control heads and actuators. Mounting cap with valve shut-off function. Fully adjustable with ES-SV adjustment key. Valve spindle with double O ring seal. The valve insert can be replaced with the MGV mounting unit at operating pressure without the system having to be drained.

Technical specifications

System connection
See ordering table

Thermostat head/actuator connection
Threaded connection M 30 x 1.5 mm

Nominal pressure
Max. 10 bar

Nominal diameter
DN 10, DN 15, DN 20

Operating temperature range
Medium: T_{max} = 120 °C

Housing
Gunmetal, nickel-plated

8

Valve pre-adjustment

Vario thermostat valves are fully adjustable by means of the ES-SV adjustment key, starting with the open position (8 = open). The numbers 1–8 are shown on the adjustment key. Mark and counter-mark are aligned. Each ⅛ of a turn corresponds to one flow characteristic, shown in a diagram (see operating instructions).

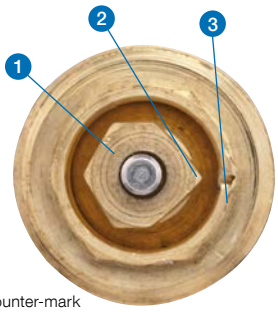

1 Counter-mark
2 Marking
3 Mark

Type overview

Valve type	Marking at valve insert	Colour of mounting cap
Vario M	2 rings	Black

See page 251 for prices.

Thermostat valve bodies Vario

Types and dimensions as per EN 215, series D

Vario M – angled

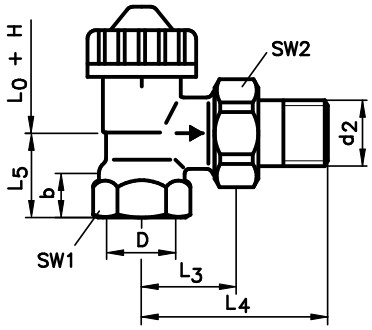

Vario M – straight

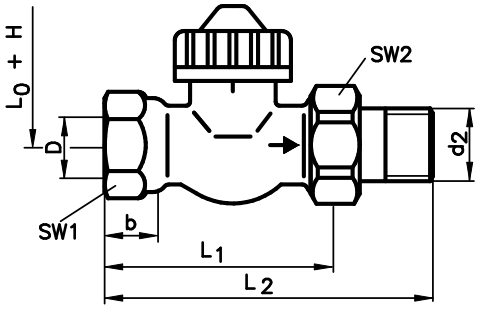

Vario M – axial

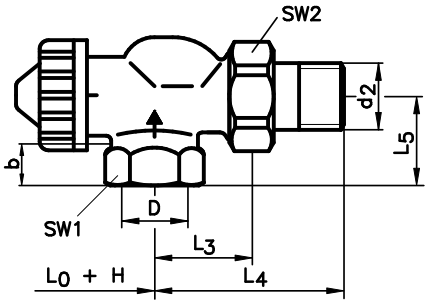

Vario M – angled-angled, left

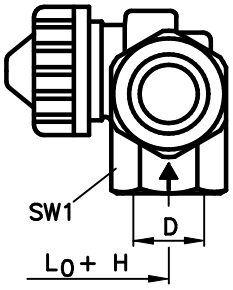

Vario M – angled-angled, right

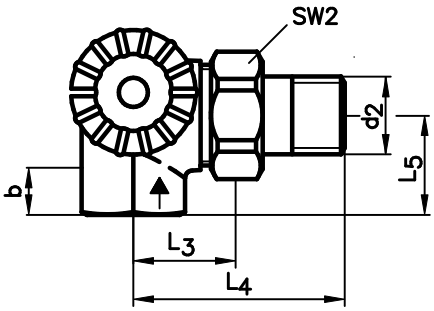

Dimensions (mm)

DN	D	d2	Spanner size SW1	Spanner size SW2	H	L0	L1 ±2	L2 ±2	L3 ±1	L4 ±1.5	L5 ±1.5	b min
10	Rp⅜	R⅜	22	27	= Height control head	23	59	85	26	52	22	10.1
15	Rp½	R½	27	30		23	66	95	29	58	26	13.2
20	Rp¾	R¾	32	37		23	74	106	34	66	29	14.5

Thermostat valve bodies Vario

DG: V, PG: 2	Version	Nominal diameter	Connection	Flow coefficient* (m^3/h)	Flow coefficient NS** (m^3/h)			Part no.	**Price €**
Vario M for medium water volumes									
	Angled	DN 10	Rp⅜ x R⅜	0.038 - 0.40	0.79	1	-	141 210.101	
		DN 15	Rp½ x R½			1	40	**141 220.101**	
		DN 20	Rp¾ x R¾			1	25	**141 230.101**	
	Straight	DN 10	Rp⅜ x R⅜	0.038 - 0.40	0.79	1	-	141 260.101	
		DN 15	Rp½ x R½			1	40	**141 270.101**	
		DN 20	Rp¾ x R¾			1	25	**141 280.101**	
	Axial	DN 15	Rp½ x R½	0.038 - 0.40	0.79	1	-	143 220.101	
	Angled-angled, right	DN 15	Rp½ x R½	0.038 - 0.40	0.79	1	-	145 220.101	
	Angled-angled, left	DN 15	Rp½ x R½	0.038 - 0.40	0.79	1	-	147 220.101	

* The flow coefficient corresponds to the water flow in m^3/h through the valve at a given valve stroke (proportional offset, e.g. 1 K or 2 K) and a differential pressure of 1 bar.
**The flow coefficient NS is the flow coefficient of the valve at nominal stroke (100 % open).

Accessories for thermostat valve bodies Vario

DG: V	Description	PG			Part no.	**Price €**
	Adjustment key ES-SV, for valve bodies Vario and VarioQ	1	1	40	**140 110.850**	
	Valve insert M for DN 10–DN 20	2	1	-	140 210.221	
	Filling and draining unit FEV 04 For valve bodies Vario/VarioQ and combination blocks THK/Twin	2	1	-	140 110.870	
	Mounting unit MGV for replacing the valve inserts Vario, VarioQ and Vario-DP	2	1	2	140 110.860	

8

Radiator lockshield valves type 456

- **Fully adjustable**
- **Shutting off individual radiators**
- **Reproducible adjustment**

Page 232

Page 255

Application

To shut off individual radiators so that maintenance work or painting can be performed without having to drain the entire heating system. Suitable for small, medium and large water volumes. For installation in single-pipe and dual-pipe heating systems.

Description

Radiator lockshield valve type 456 with drain, shut-off and adjustment function. With cap (version M) to protect against incorrect operation. Adjustable according to flow diagram (see operating instructions). The selected setting is reproducible due to the integrated stroke limiter/stop (not version M Eco) and thus independent of draining. The optional filling and draining unit FEV with hose connection G½ can be used for easy and fast draining. Draining capacity equal to flow coefficient 1.1. Version M Eco without stroke limiter.

8

Technical specifications

System connection
See ordering table

Nominal pressure
Max. 10 bar

Nominal diameter
DN 10, DN 15, DN 20

Operating temperature range
Medium: T_{max} = 120 °C

Housing
Gunmetal, nickel-plated
Version BG: not nickel-plated

i

Please use valve body in flow to adjust the required water volume.

See page 259 for prices.

Radiator lockshield valves type 456

Types and dimensions (mm)

Type 456 M – angled

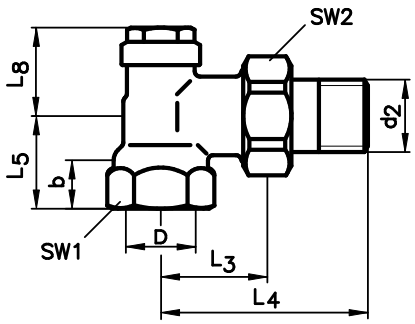

Type 456 M – straight

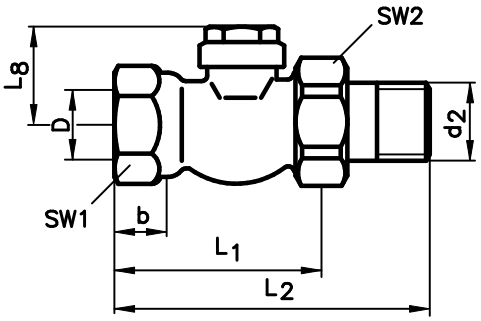

Type 456 L – angled

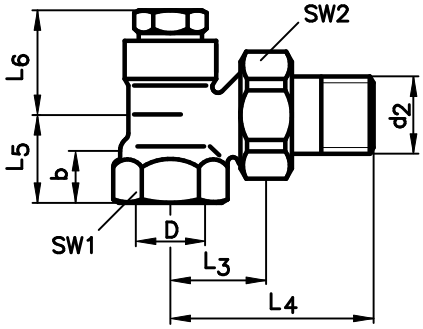

Type 456 L – straight

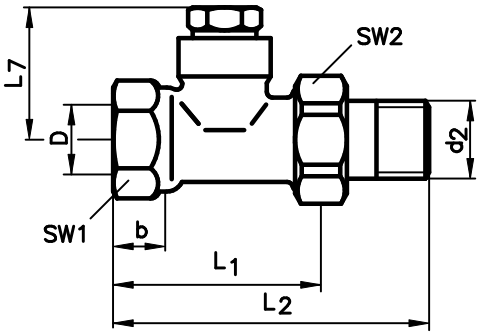

Type 456 M – angled, version BG

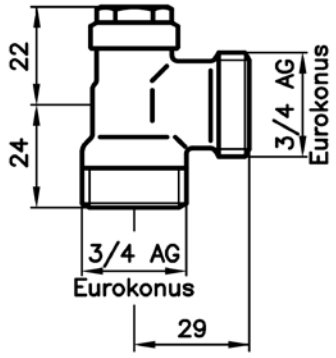

Type 456 M – straight, version BG

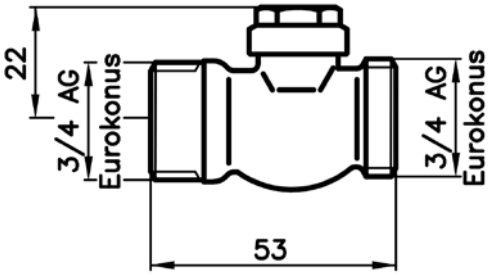

Dimensions (mm)

DN	D	d_2	Spanner size SW 1	Spanner size SW 2	b min	L_1 ±2	L_2 ±2	L_3 ±1	L_4 ±1.5	L_5 ±1.5	L_6	L_7	L_8
10	Rp⅜	R⅜	22	27	10.1	49	75	26	52	22	-	-	22
15	Rp½	R½	27	30	13.2	51	80	29	58	26	26.5	33.5	22
20	Rp¾	R¾	32	37	14.5	59	91	34	66	29	30.5	38	22
25	Rp1	R1	42	46	16.8	90	125	40	75	34	-	-	50

Radiator lockshield valves type 456

DG: V, PG: 2	Version	Nominal diameter	Connection	Flow coefficient NS* (m^3/h)			Part no.	**Price €**
Type 456 M Eco for medium water volumes (without stroke limiter)								
	Angled	DN 10	Rp⅜ x R⅜	1.28	1	50	**453 010**	
		DN 15	Rp½ x R½	1.28	1	40	**453 020**	
		DN 20	Rp¾ x R¾	1.28	1	30	**453 030**	
	Straight	DN 10	Rp⅜ x R⅜	1.28	1	50	**453 060**	
		DN 15	Rp½ x R½	1.28	1	40	**453 070**	
		DN 20	Rp¾ x R¾	1.28	1	30	**453 080**	
Type 456 M for medium water volumes (standard version with stroke limiter)								
	Angled	DN 10	Rp⅜ x R⅜	1.28	1	-	453 210	
		DN 15	Rp½ x R½	1.28	1	-	453 220	
		DN 20	Rp¾ x R¾	1.28	1	-	453 230	
	Straight	DN 10	Rp⅜ x R⅜	1.28	1	-	453 260	
		DN 15	Rp½ x R½	1.28	1	-	453 270	
		DN 20	Rp¾ x R¾	1.28	1	-	453 280	

* The flow coefficient corresponds to the water flow in m^3/h through the valve at a given valve stroke (proportional offset, e.g. 1 K or 2 K) and a differential pressure of 1 bar. The flow coefficient NS is the flow coefficient of the valve at nominal stroke (100 % open).

8

Accessories for radiator lockshield valve type 456

DG: V	Version			Part no.	**Price €**
	Filling and draining unit FEV 01 For types 456 M	1	20	**452 010.803**	

Thermostat combination blocks Vario THK

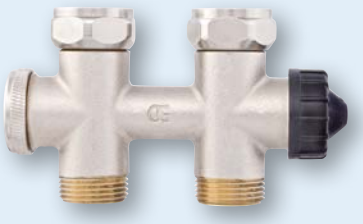

- **Fully adjustable**
- **Valve insert can be replaced without system having to be drained**
- **Various versions and sizes for virtually any application**

A Page 259 | A Page 259 | A Page 260

Application

Suitable for small and medium water volumes. For mounting to compact or bathroom radiators with centre connection in dual-pipe heating systems. Also for installations with copper pipes.

Description

Low-noise thermostat combination block with threaded connection M30 x 1.5 mm for thermostat control heads and actuators. Mounting cap with valve shut-off function. Fully adjustable with ES-SV adjustment key. Valve spindle with double O ring seal.

8

Technical specifications

System connection
G¾ eurocone or G½ female thread

Thermostat head/actuator connection
Threaded connection M 30 x 1.5 mm

Nominal pressure
Max. 10 bar

Nominal diameter
DN 15

Operating temperature range
Medium: T_{max} = 120 °C

Housing
Brass, nickel-plated

Valve pre-adjustment

Vario THK thermostat combination blocks are fully adjustable by means of the ES-SV adjustment key, starting with the open position (8 = open), see adjustment key for numbers 1–8. Mark and counter-mark are aligned. Each ⅛ of a turn corresponds to one flow characteristic, shown in a diagram (see operating instructions).

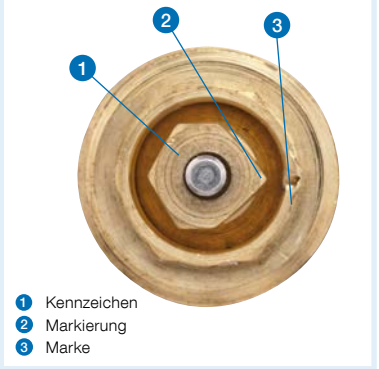

Thermostat combination blocks Vario THK

Types and dimensions (mm)

Vario THK S, M – version G½ male thread

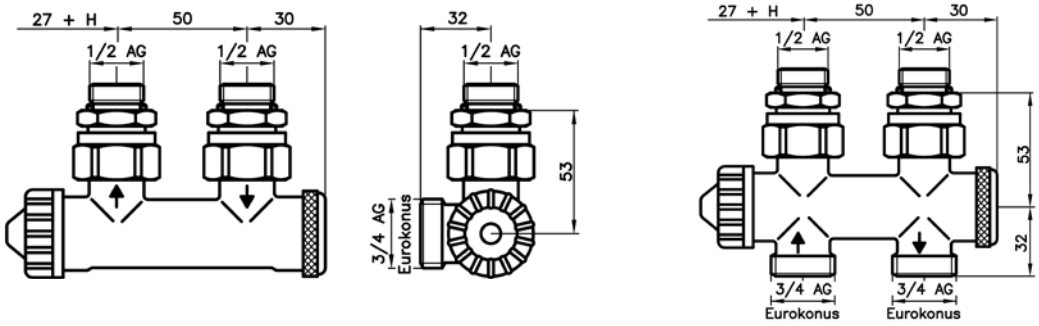

Cover Vario combination block angled/straight

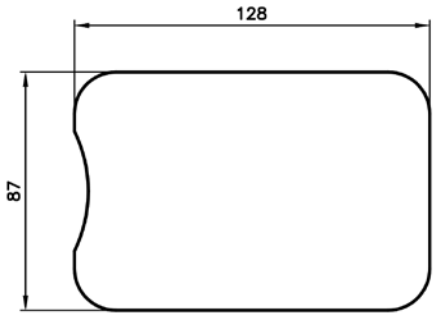

8

Thermostat combination blocks Vario THK

DG: V, PG: 2	Version	Nominal diameter	Radiator connection	Flow coefficient* (m^3/h)	Flow coefficient NS** (m^3/h)			Part no.	**Price €**
Vario THK M for medium water volumes									
	Angled	DN 15	G½ female thread	0.038 - 0.46	0.68	1	-	221 225.101	
	Straight	DN 15	G½ female thread	0.038 - 0.46	0.68	1	-	221 275.101	

* The flow coefficient corresponds to the water flow in m^3/h through the valve at a given valve stroke (proportional offset, e.g. 1 K or 2 K) and a differential pressure of 1 bar.
**The flow coefficient NS is the flow coefficient of the valve at nominal stroke (100 % open).

Accessories for thermostat combination blocks Vario THK

DG: V	Description	PG			Part no.	**Price €**
	Adjustment key ES-SV	1	1	40	**140 110.850**	
	Valve insert S for DN 15	2	1	-	140 110.221	
	Valve insert M for DN 15	2	1	-	140 210.221	
	Adapter for radiator R½ female thread Connection: ½" male x ¾" male eurocone	2	1	-	273 020.040	
	Cover for thermostat combination blocks Vario THK angled or straight, DN 15	1	1	30	220 000.301	
	Filling and draining unit FEV 04 For valve bodies Vario/VarioQ and combination blocks THK/Twin	2	1	-	140 110.870	
	Mounting unit MGV for replacing the valve inserts Vario S-L ⅜" – ¾", standard ⅜" – ¾", V_{max} ⅜" – ½" and old inserts of the Gampper series V, VV, VF.	2	1	2	140 110.860	

Thermostat control heads

- **With liquid probe**
- **Adjustable eco setting**
- **Adjustment range can be limited and blocked with ring**
- **Fits onto many other valve radiators without adapter.**

Page 232

Page 245

Page 256

Scale*	Room temperature
❄	Approx. 6 °C (automatic frost protection)
0	Zero end
1	Approx. 14 °C
2	Approx. 17 °C
3	Approx. 20 °C
4	Approx. 23 °C
5	Approx. 26 °C

* Temperature difference to next dial marks is approx. 3 K

Application

For setting and controlling the room temperature at the radiator. Version 323 suitable for valve body series Vario, VarioQ, Vario-DP, thermostat combination blocks Vario THK, VarioQ-Kombi and valve radiators with integrated valve insert with connection thread M30 x 1.5 mm. Version 320 suitable for valve versions with Gampper clamp connection (valve bodies up to year of manufacture 1998). Version 323 KD suitable for Danfoss clamp connection (compatible series RA).

Description

Thermostat control head with liquid probe, consisting of hand wheel with scale and base in different colours (see ordering table). Optional version with remote probe or remote adjustment. The desired room temperature is set with the hand wheel. The temperature probe continuously checks the room temperature, compares the measured values to the set value and controls the flow rate by opening or closing the valve to obtain the set value. Adjustment range can be limited and blocked with a ring. With optimum temperature position (eco position) adjustable via memory clip. Frost protection position with snowflake symbol.

Tamper-proof version without zero position. Lower adjustment only to snowflake symbol. The adjustment range must be selected when the valve is mounted for the first time. A protective cap consisting of two parts which cannot be removed prevents disassembly and changes to the selected settings. The protective cap is secured by means of a screw.

Technical specifications

Connection valve body
322: Threaded connection M 30 x 1.5 mm
323: Gampper clamp connection
323 KD: Danfoss clamp connection

Operating temperature range
Ambient: T_{max} 50 °C

Material
Plastic

Option
- Personalised labels

i

Special, customised labels on the thermostat heads are possible for purchase quantities > 100 pieces.

Please note the manufacturer information concerning the connection geometry.

See page 263 for prices.

Thermostat control heads

Types and dimensions (mm)

Thermostat control head 323 with fixed probe

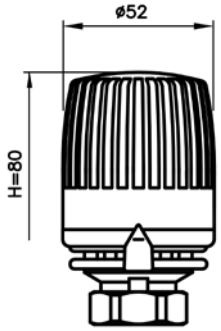

Thermostat control head 323 F with remote probe

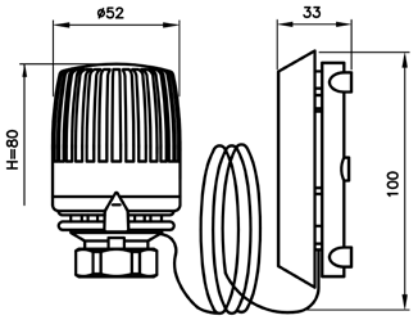

Thermostat control head 323 B with fixed probe, tamper-proof version with anti-theft system

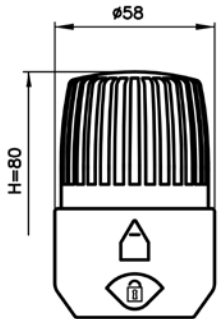

Thermostat control head 323 BF with remote probe, tamper-proof version with anti-theft system

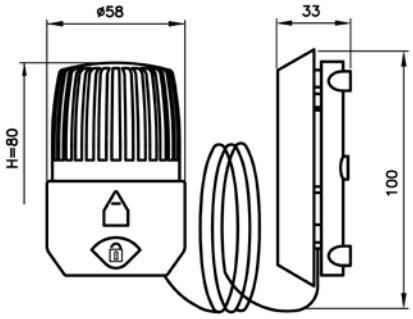

Thermostat control head 320 FV
with remote adjustment and remote transmission

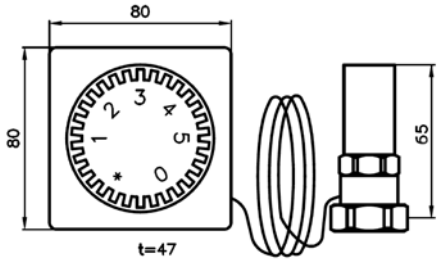

8

Thermostat control heads

Types and dimensions (mm)

Thermostat control head 323 KD with fixed probe, Danfoss clamp connection

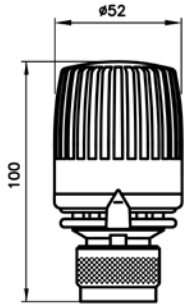

Thermostat control head 323 KD with remote probe, Danfoss clamp connection

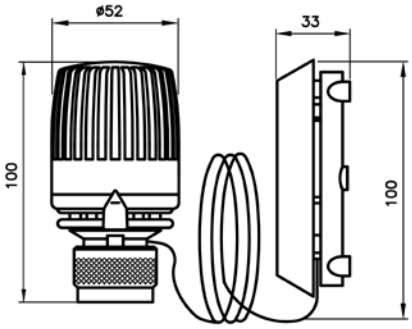

Thermostat control head 323 KD FV with remote adjustment and remote probe, Danfoss clamp connection

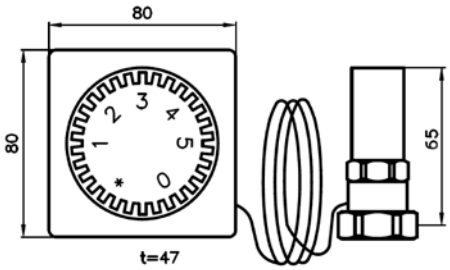

Angle adapter

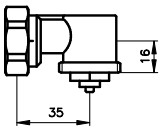

8

Thermostat control heads with threaded connection

DG: V, PG: 1	Description	0 setting	Hand wheel/ base	Capillary tube			Part no.	Price €
	Thermostat control head 323 With liquid probe, threaded connection M30 x 1.5 mm	With	White/ black	-	1	50	**360 002.100**	
		Without	White/ black	-	1	-	**360 000.100**	
	Thermostat control head 323 With liquid probe, threaded connection M30 x 1.5 mm	With	White	-	1	-	**360 012.100**	
		Without	White	-	1	-	**360 010.100**	
	Thermostat control head 323 With liquid probe, threaded connection M30 x 1.5 mm and personalised **company label**	With	White/ black	-	1	200	360 002.109	**On request**
		Without	White/ black	-	1	200	360 000.109	**On request**
	Thermostat control head 323 F With remote probe and bracket, threaded connection M30 x 1.5 mm	With	White/ black	1.2 m	1	-	362 102.100	
		With	White/ black	2 m	1	30	**362 202.100**	
		With	White	1.2 m	1	-	362 112.100	
		With	White	2 m	1	-	362 212.100	
		Without	White/ black	1.2 m	1	-	362 100.100	
		Without	White/ black	2 m	1	-	362 200.100	
		Without	White	1.2 m	1	-	362 110.100	
		Without	White	2 m	1	-	362 210.100	
	Thermostat control head 323 B Tamper-proof version with anti-theft system, threaded connection M30 x 1.5 mm	Without	White/ black	-	1	30	**364 000.100**	
	Thermostat control head 320 FV With remote adjustment and remote transmission, threaded connection M30 x 1.5 mm	With	White	2 m	1	12	347 200.100	

8

Thermostat control heads with clamp connection: Gampper, Danfoss

DG: V, PG: 1	Description	0 setting	Hand wheel/ base	Capillary tube			Part no.	**Price €**
	Thermostat control head 323 with liquid probe, Gampper clamp connection. For valves from 1980 - 1998 (and replacement for models 313, 314, 320)	With	White/ black	-	1	50	**360 002**	
		Without	White/ black	-	1	50	360 000	
	Thermostat control head 323 F N with remote probe and bracket, Gampper clamp connection. For valves from 1980 – 1998 (and replacement for models 313, 314, 320) Replacement for thermostat control heads series 312 up to 1980	With	White/ black	1.2 m	1	30	362 102	
		With	White/ black	2 m	1	30	**362 202**	
	Thermostat control head 323 KD with liquid probe, Danfoss clamp connection, compatible series RA	With	White/ black	-	1	15	360 002.130	
	Thermostat control head 323 KD F with remote probe, Danfoss clamp connection, compatible series RA	With	White/ black	2 m	1	-	362 202.130	
	Thermostat control head 320 KD FV with remote adjustment and remote transmission, Danfoss clamp connection, compatible series RA	With	White	2 m	1	-	347 200.130	

8

Accessories for thermostat control heads

DG: V, PG: 1	Description			Part no.	**Price €**
	Angle adapter M30 x 1.5 mm, white	1	-	340 010.200	
	Tamper-proof cap 323 BK for control heads 323	1	-	364 110	

Thermostat control heads 316, 312

gampper
Member of AFRISO Group

Conversion of thermostat control heads GAMPPER from year of 1975 up to date

Thermostat control head 316

Description

The thermostat control head 316 can be converted with the adapter 316 KH (part no. 100 010.663) so that the thermostat control heads series 323 (M30 x 1.5 mm) can be mounted to an adapter. Conversion is also possible by replacing the valve inserts. If this is done, the system must be emptied.

Thermostat control head 312

Description

The thermostat control head 312 can be replaced with the thermostat control head 323 N (part no. 360 002).

Observe the following when replacing thermostat control heads series 312:

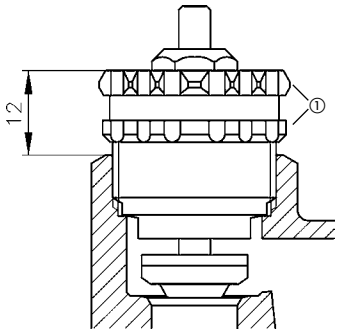

① Valve insert with dual gear (double hex, AF 24)

All standard series 323 thermostat control heads can be mounted to valve bodies with a dual gear.

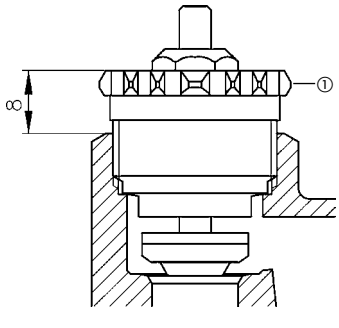

① Valve insert with single gear (double hex, AF 24)

In the case of valve bodies with a single gear, thermostat control heads version "S" must be mounted. The type designation for a thermostat control head with built-in probe is 323 (N)S and for a thermostat control head with remote probe 323 F (N) S, with indication of the capillary tube length.

Thermostat control heads 313, 314, 320 S, 320 KH

Gampper
Member of AFRISO Group

Thermostat control head 313

Description The thermostat control head 313 can be replaced with the thermostat control head 323 N (part no. 360 002).

Thermostat control head 313 E

Description The thermostat control head 313 E can be replaced with the thermostat control head 323 N (part no. 360 002).

Thermostat control head 314

Description The thermostat control head 314 can be replaced with the thermostat control head 323 N (part no. 360 002).

Thermostat control head 320 S

Description The thermostat control head 320 S can be replaced with the thermostat control head 323 N (part no. 360 002).

Thermostat control head 320 KH

Description The thermostat control head 320 KH (M30 x 1,5 mm) can be replaced with the thermostat control head 323 N (part no. 360 002.100).

Thermostat control heads 323, adapter M30 x 1.5 mm

Gampper
Member of AFRISO Group

Thermostat control head 323

Description

The thermostat control head 323 is available with the GAMPPER clamp connection, type 323 N (part no. 360 002) or with threaded connection M30 x 1.5 mm. All series 323 thermostat control heads can be fitted to thermostat valves with M30 x 1.5 mm threaded connection.

The thermostat control head 320 N can be replaced with the thermostat control head 323 N (part no. 360 002).

Conversion of Gampper clamp connection to threaded connection M30 x 1.5 mm

For thermostat valve bodies from year of manufacture 1978

Types and dimensions (mm)

Adapter 910 049

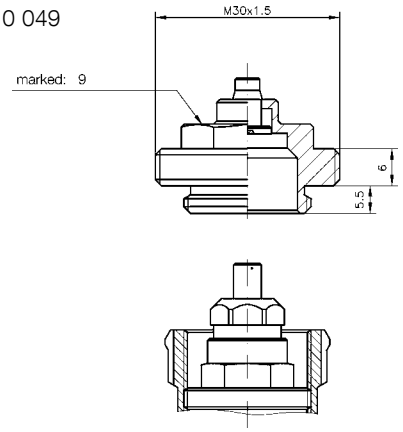

Adapter 910 042

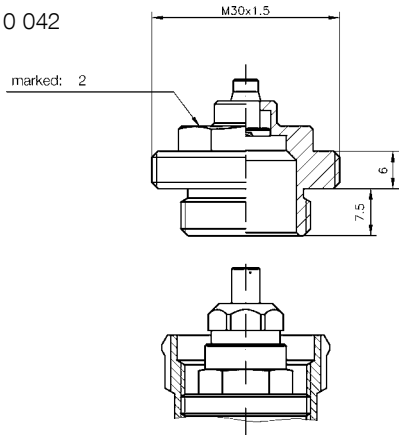

Adapter 910 041

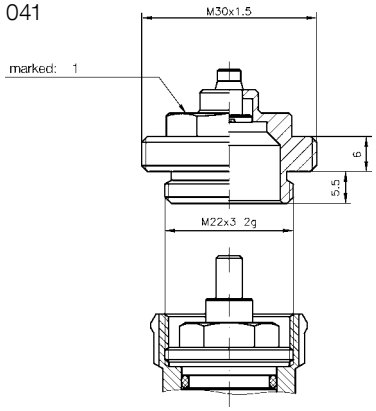

Adapter 100 010.663

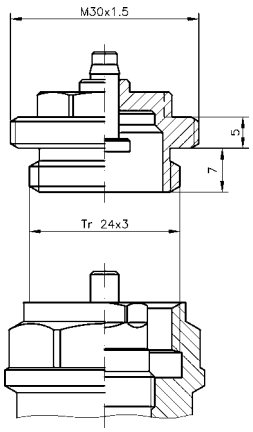

Rainwater harvesting

Signal anodes and sacrificial anodes

reddot design award
winner 2013

Domestic water system centre

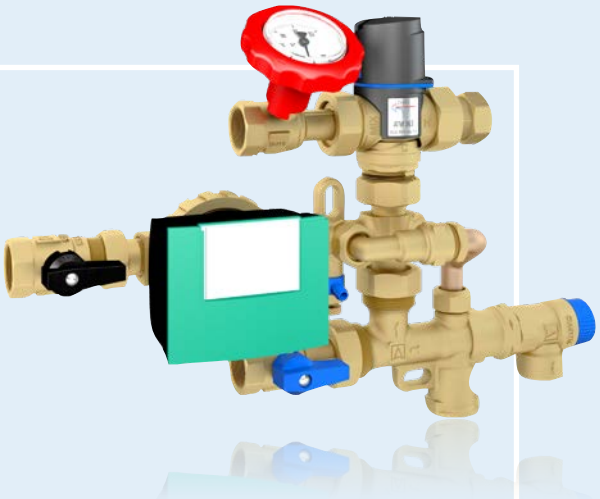

Hot water circulation systems

CHAPTER 9

Equipment for drinking water supply, hot water treatment and rainwater harvesting

OVERVIEW

Equipment for drinking water supply, water treatment and rainwater harvesting 270

Efficient hot water treatment by intelligent circulation 275

SAFETY EQUIPMENT

Filters, check valves 271

Strainers, diaphragm safety valves MSW 272

Signal anode U 273

Sacrificial anodes: Anode I, sacrificial anode and chain anode, anode tester AT1 274

Hot water circulation system WZS 100 278

Hot water circulation system WZS 75 280

Thermal mixing valve ATM 363 WMG 282

Thermal mixing valve ATM 363 WSG 284

Thermal mixing valves ATM 285

Circulation lance ZL 2 286

Circulation controller EC 1 287

Circulation switch ZS 2, Water safety group assembly WSG 150 288

Boiler safety group assemblies WSG 75 and BFK 12 289

FILTERS

Water filter WAF 04-R with pressure reducer, backwashable 290

Automatic backwashing unit RA 01 for WAF 04-R and HWSC 290

DISTRIBUTION STATIONS

Domestic water system centre HWSC 291

RAINWATER HARVESTING

Oil tank conversion kits II + III for rainwater harvesting in gardens 295

Rainwater inner lining AR-SM with magnets 296

Backup controller kit RENA 297

Equipment for drinking water supply, water treatment and rainwater harvesting

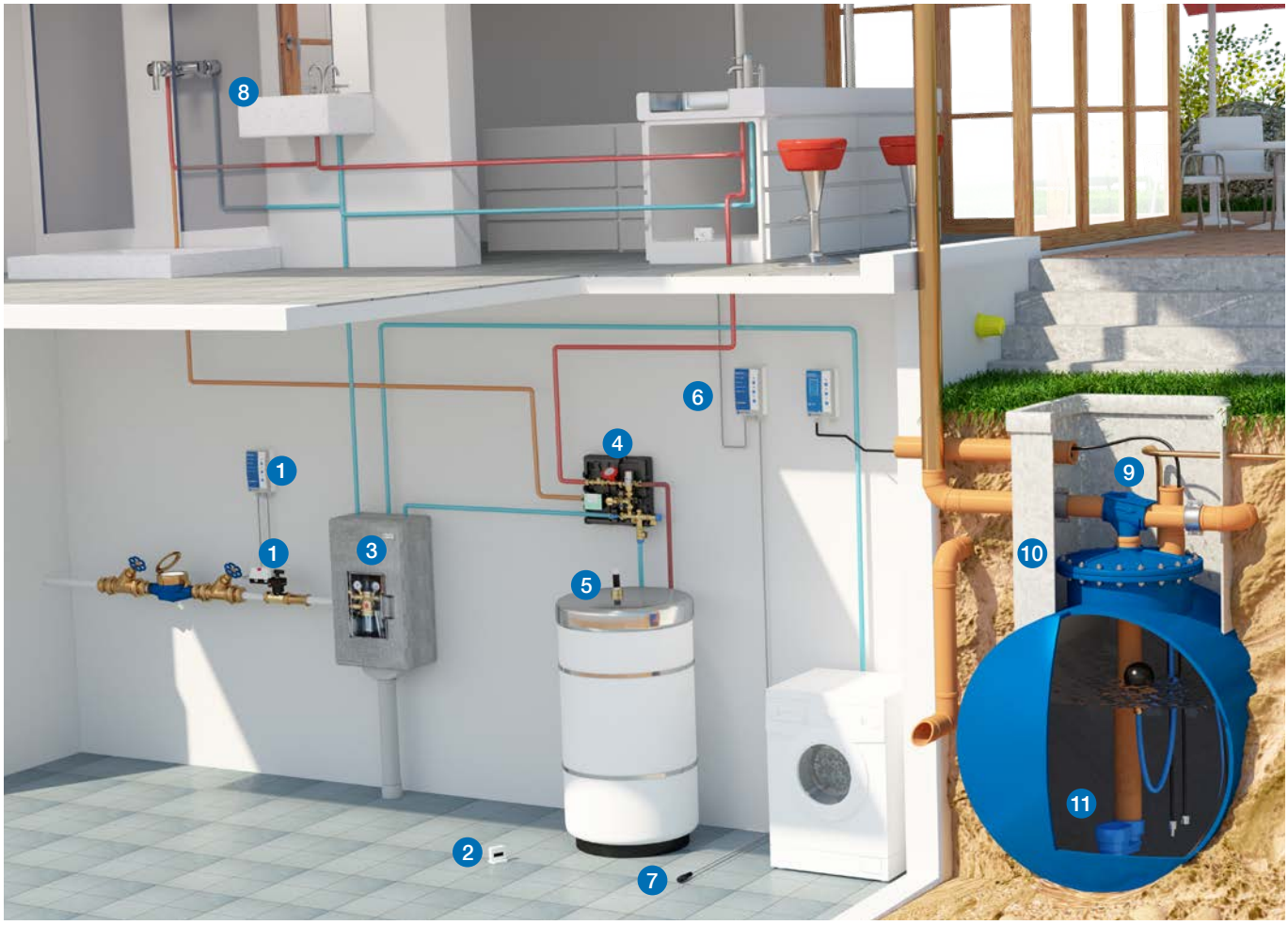

Quality water technology products

1. Radio-controlled water valve WaterControl 01
2. Wireless conductivity water sensor WaterSensor con
3. Domestic water system centre HWSC
4. Hot water circulation system WZS 100
5. Signal anode U
6. Oil/water alarm unit OM 5
7. Probe for OM 5
8. Battery-less WaterSensor eco

Oil tank conversion kit:

9. Cartridge filter PF for rainwater
10. Plastic manhole cover
11. Calmed inlet

Clean water

In the area of water technology, AFRISO offers equipment for drinking water supply and products for rainwater harvesting. The focus is the protection and cleanliness of the water, the supply pipes and the installations. AFRISO products are made to the most demanding hygienic requirements and the stringent demands of the German drinking water act as well as the recommendations of the leading associations and organisations.

Filters check valves

Filters

Description

Filter made of hot-pressed brass with replaceable stainless steel sieve for direct installation in domestic drinking water installations.

Technical specifications

Operating pressure
Up to size G1: 16 bar
From size G1¼: 10 bar

Connections
See ordering table

Check valve

Check valve made of brass for direct installation in domestic drinking water installations.
Also suitable as a gravity brake. Nylon valve, seal seat NBR, spring stainless steel.

Operating temperature range
Medium: Max. 110 °C

Operating pressure
Up to size G1: 12 bar
Size G1¼ and greater: 10 bar

Connections
See ordering table

9

DG: G	PG			Part no.	**Price €**
Filter G⅜	2	1	-	**42580**	
Filter G½	2	1	-	**42581**	
Filter G¾	2	1	-	**42582**	
Filter G1	2	1	-	**42583**	
Filter G1¼	2	1	-	**42584**	
Filter G1½	2	1	-	**42585**	
Filter G2	2	1	-	**42586**	
Check valve G⅜ – DN 10	2	1	-	**42540**	
Check valve G½ – DN 15	2	1	-	**42541**	
Check valve G¾ – DN 20	2	1	-	**42542**	
Check valve G1 – DN 25	2	1	-	**42543**	
Check valve G1¼ – DN 32	2	1	-	**42544**	
Check valve G1½ – DN 40	2	1	-	**42545**	
Check valve G2 – DN 50	2	1	-	**42546**	

Strainers, diaphragm safety valves MSW

Strainer

Application
Directly screwed into check valves or suction lines with usual pipe connections. For domestic water installations.

Description
Strainer, consisting of stainless steel sieve, connection piece made of nylon.

Technical specifications

Operating temperature range
Medium: Max. 110 °C

Mesh size
1.7 mm²
16 holes per cm²

Connections
See ordering table

Diaphragm safety valve MSW

For sealed drinking water heaters as per EN 806, DIN 1988 and DIN 4753-1 and for protection against overpressure.

The response pressure is factory-set. The size of the valve inlet determines the unit type, the outlet is larger by one dimension.

Opening/response pressure
See ordering table

Connection
See ordering table

Material
Housing: Brass (CW617N), flap: PA 6, blue

Operating temperature range
Medium: 4/110 °C

DG: G	Maximum heating capacity	PG			Part no.	Price €
Strainer G⅜ – DN 10	-	1	1	-	**20811**	
Strainer G½ – DN 15	-	1	1	-	**20812**	
Strainer G¾ – DN 20	-	1	1	-	**20813**	
Strainer G1 – DN 25	-	1	1	-	**20814**	
Strainer G1¼ – DN 32	-	1	1	-	**20815**	
Strainer G1½ – DN 40	-	1	1	-	**20816**	
Strainer G2 – DN 50	-	1	1	-	**20817**	
MSW G½ x G¾, 6 bar	75 kW	2	1	84	**42421**	
MSW G½ x G¾, 8 bar	75 kW	2	1	84	**42422**	
MSW G½ x G¾, 10 bar	75 kW	2	1	84	**42423**	
MSW G¾ x G1, 6 bar	150 kW	2	1	84	**42425**	
MSW G¾ x G1, 8 bar	150 kW	2	1	84	**42426**	
MSW G¾ x G1, 10 bar	150 kW	2	1	84	**42427**	
MSW Rp1 x Rp1¼, 6 bar	250 kW	2	1	10	**42442**	
MSW Rp1 x Rp1¼, 8 bar	250 kW	2	1	10	**42443**	
MSW Rp1 x Rp1¼, 10 bar	250 kW	2	1	10	**42444**	

Signal anode U

- **Signal unit outside of the boiler indicates when it is time to replace the anode**
- **For enamelled boilers or tanks with passive protection layers**
- **Ideal for replacing conventional sacrificial anodes in hot water tanks (100 to 500 l)**
- **Choice of connection G¾, G1, G1¼**

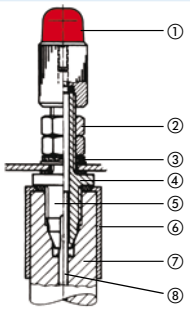

① Signal unit
② Screw connection
③ Seal
④ Anode mount
⑤ Test space
⑥ Protective cap for test space
⑦ Magnesium anode, unused
⑧ Steel core

Application

Protection against frequently unnoticed corrosion damage in water heaters. Primarily for use in enamelled boilers or hot water tanks with other types of passive protective coatings. Signal anodes replace consumed conventional sacrificial anodes primarily in hot water tanks with a capacity of 100 to 500 litres. Defective areas in enamel or other passive protective coatings are subject to corrosion; this causes a flow of current which is transformed into a protective current by the anode material. The anode material thus falls victim to electro-chemical corrosion. Since the protective function of the anode rod is not unlimited, consumed anodes have to be replaced.

Description

Universal, complete signal anode as per EN 12828, made of magnesium alloy. Version with screw fitting, signal unit and instruction label. The parts submerged in water are heat-resistant up to operating temperatures of 100 °C and comply with the German Food Act. When the anode material is used up, water penetrates the test space and causes a red discolouration of the signal unit to indicate that the anode is used up. In the case of conventional anodes (rod or chain anode), the boiler has to be opened for anode inspection.

Technical specifications

System pressure
Max. 15 bar

Operating temperature range
Medium: 0/100 °C

Connections
Female connection G¾, G1 or G1¼

Dimensions (L x Ø)
G¾: 1,000 x 21 mm (5 elements)
G¾: 500 x 22 mm
G1: 500 x 26 mm
G1¼: 500 x 33 mm

DG: G, PG: 3	Form	Connection			Part no.	**Price €**
Signal anode U 21–¾	chain, 5 elements	G¾	1	-	69816	
Signal anode U 22–¾	rod	G¾	1	-	**69800**	
Signal anode U 26–1	rod	G1	1	-	**69805**	
Signal anode U 33–1¼	rod	G1¼	1	-	**69810**	

Sacrificial anodes

For increased hygiene:
Anode individually packed in poly bag

Application

Protection against frequently unnoticed corrosion damage in water heaters. Primarily for use in enamelled boilers or hot water tanks with other types of passive protective coatings. Defective areas in enamel or other passive protective coatings are subject to corrosion; this causes a flow of current which is transformed into a protective current by the anode material. The anode material thus falls victim to electro-chemical corrosion. Since the protective function of the anode rod is not unlimited, consumed anodes have to be replaced.

Description

Anode I

Sacrificial anode Ø 22, 26, 33 mm as per EN 12828, made of magnesium alloy, for isolated installation. With M8 male, threaded connection, isolating piece and earth cable. Consumption check with AT1 anode tester.

Sacrificial anode

Sacrificial anode Ø 22, 26 or 33 mm as per EN 12828, made of magnesium alloy, suitable for all standard tanks. With screw fitting G¾, G1 or G1¼, without signal. See the ordering table for various versions with different lengths, threads and diameters.

Chain anode

Flexible sacrificial anode Ø 22 mm as per EN 12828, made of magnesium alloy. A flexible anode is used if there is insufficient space to install a rigid anode. Consisting of five individual elements along a stainless steel rope and a G¾ screw fitting or M8 male-threaded connection (see also Anode I) Length approx 800 – 900 mm.

Anode tester AT1

Tester for consumption check of anode I or isolated standard sacrificial anodes.

- Handheld tester with 4-level LED indication
- Fast and easy indication of the condition of the anode
- Reliability of the water heater due to preventive maintenance – consumed anodes are replaced in good time

DG: G	PG			Part no.	Price €
Anode I 22–500-M8	3	1	45	69806	
Anode I 26–500-M8	3	1	35	69811	
Anode I 33–500-M8	3	1	20	69808	
Sacrificial anode 22–500-¾	3	1	40	69815	
Sacrificial anode 22–700-¾	3	1	30	69817	
Sacrificial anode 26–500-1	3	1	30	69819	
Sacrificial anode 26–700-1	3	1	20	69821	
Sacrificial anode 33–550-1¼	3	1	15	69825	
Chain anode 22–800-¾ (5 elements)	3	1	35	69829	
Chain anode I 22–900-M8 (5 elements)	3	1	35	69804	
Accessories (DG: H)					
Anode tester AT1 for anode I	4	1	-	69842	

Hot water circulation system WZS 100

NEW

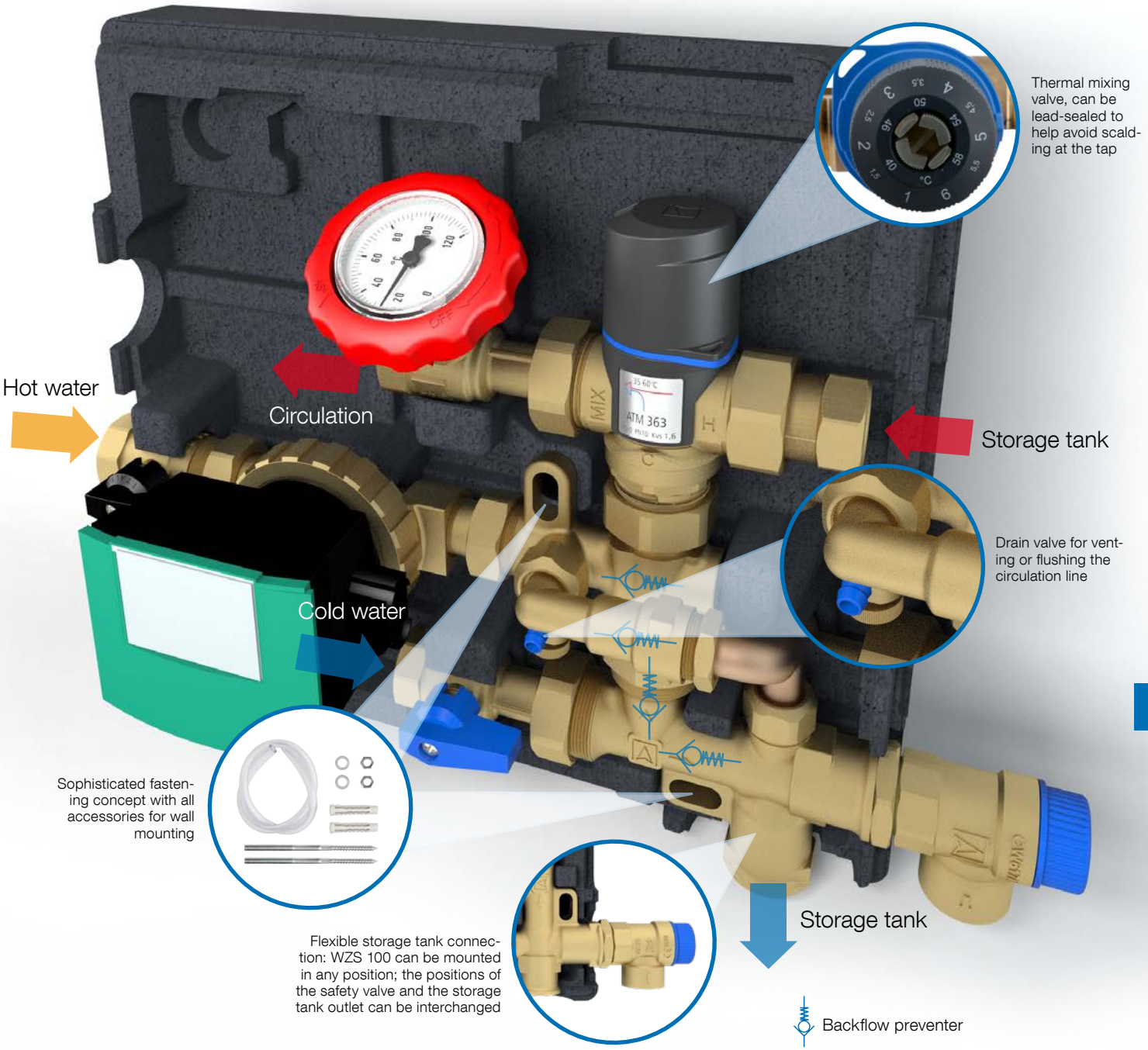

9

Assembly for easy connection to solar, hot water, hygienic or combination storage tanks (with or without circulation connection at the storage tank)

- Pre-assembled, tightness-tested and heat-insulated assembly speeds up installation/commissioning and facilitates logistics
- Intelligent circulation distribution by means of integrated bypass: No back circulation, no "mixing" of thermal layers in the stratified storage tank
- Fully secured: diaphragm safety valve, backflow preventer and all shut-off valves integrated
- Integrated pump for plug & play operation
- Thermometer for easy on-site checks (range 0/120 °C)

Unwanted, inefficient incorrect installations of stratified storage tanks

As a result of the increasing use of renewable energy in domestic technology applications, the number of hygienic stratified storage tanks with a temporary operating temperature of more than 60 °C is also on the rise. In order to connect such tanks in a more efficient way, to keep the thermal layers and to limit the outlet temperature of the hot water, the installation of the service water line involves several fittings and connection parts.
Optimum design of the circulation can often be a major challenge in terms of hydraulics and logistics. For example, the service water connections to the water heater have been made according to the old, inefficient logic or important parts have been "forgotten".

In most cases, the circulation line of stratified storage tanks is connected to the cold water inlet of the hot water tank. This way, the hot circulation water of the return flows through the lower area of the stratified storage tank which is usually cooler. In the lower area, the returning circulation water is cooled - only to be heated up again in the upper thermal layers.
The consequence: The storage medium is evenly heated – which destroys the important thermal layering. The high energy density in the upper thermal layers is lost. In the most adverse case, the function of a solar system is prevented or extremely limited in the transition period.

Typical implementation issues:

Incorrectly installed circulation pump

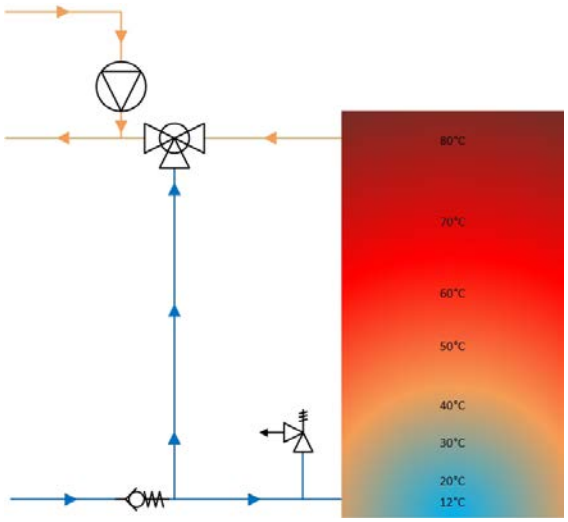

Incorrectly installed circulation pump and "forgotten" backflow preventer

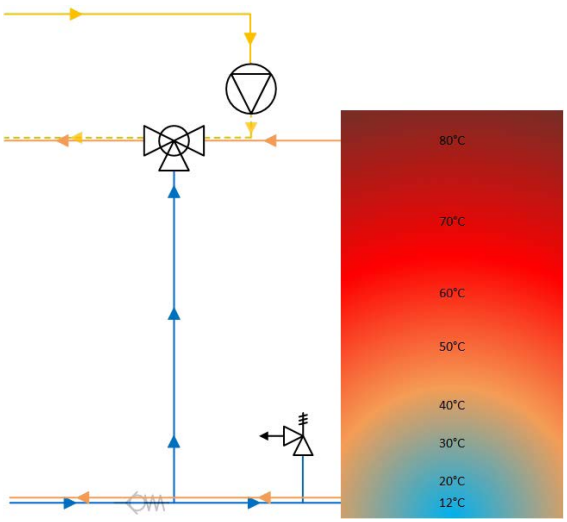

Incorrectly installed circulation pump and "forgotten" safety-related equipment

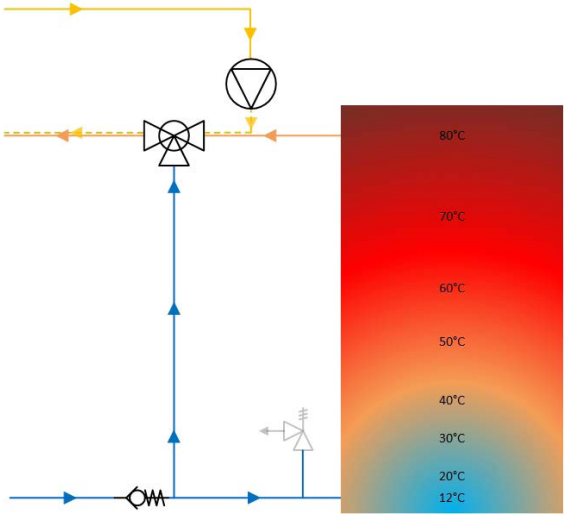

WZS 100 ensures reliable function and efficient operation

With the use of WZS 100, the return part of the circulation line has a direct connection to the cold water inlet of the thermal mixing valve. Depending on the water temperatures at the inlets of the mixing valve, they will open or close the hot water inlet and the cold water inlet to a higher or less high degree. A partial volume of the returning circulation water flows directly to the cold water connection of the mixing valve. Depending on the mounting situation (internal/external circulation), the other partial volume can be resupplied upstream of the tank.

WZS 100 thus allows for intelligent circulation distribution without back-circulation and without "mixing" of the temperatures in the stratified storage tank. With minimum installation effort, all possibilities of advanced stratified storage systems for efficient heating of water can used to their full potential.

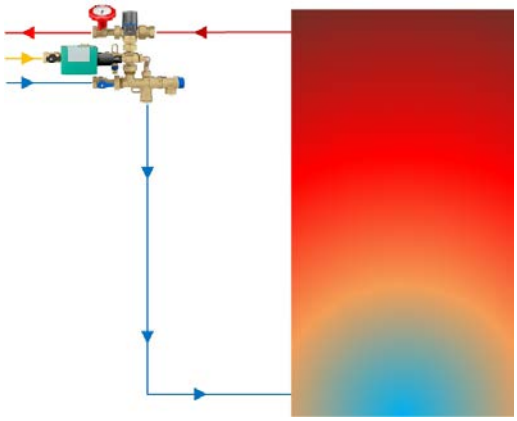

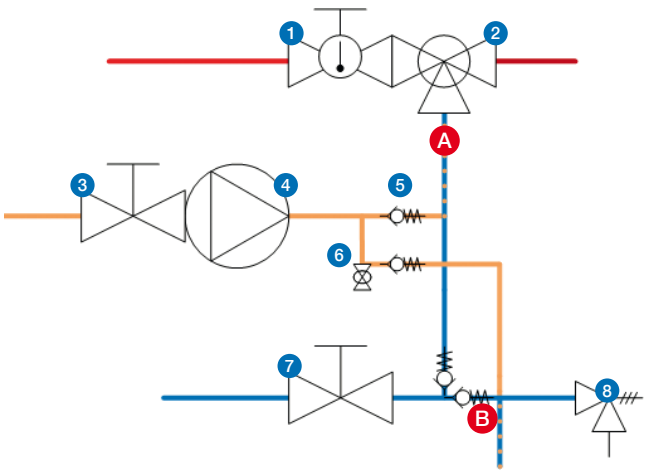

1 Shut-off valve with thermometer
2 Thermal mixing valve
3 Shut-off valve
4 Circulation pump
5 Check valve
6 Drain
7 Shut-off valve
8 Diaphragm safety valve

Function example 1 (internal circulation via bypass)

Cold water flows via the safety fitting of WZS 100 to the cold water end via line A to the mixing valve and line B to the water heater. In the example, the temperature adjustment knob of the thermal mixing valve ATM 363 is set to a hot water temperature of 60 °C. The unmixed hot water temperature at the storage outlet is 80 °C due to the high buffer temperature as a result or solar or regenerative energy. The mixing valve now opens or closes the path to the hot and cold water end depending on the temperature. Due to the fast control characteristics of ATM 363, the adjusted temperature is reached at the valve outlet (mix). Only the amount of heating energy really required to ensure the desired water temperature is actually used. If the hot water has reached the last consumer or the point or re-entry (service water to circulation), it is pumped back to the circulation unit via the newly developed flow distributor. Depending on the temperature, it distributes the water via line A to the mixing valve or via line B to the water tank. What's best: Even though there are two flow lines, the pump has to overcome only one check valve. The circulation pump has to overcome less counterforce which results in enormous energy savings and a prolonged service life of the pump.

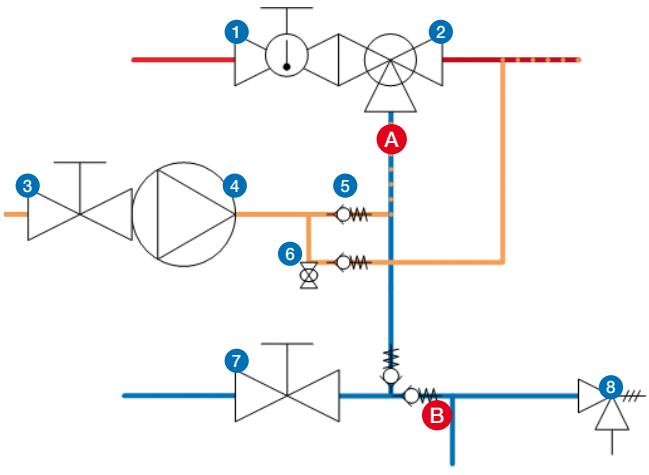

Function example 2 (operation with circulation lance)

Same system requirements as in function example 1, but with use of circulation lance ZL 2. In this configuration, the water can only flow the direct path via the circulation lance (as opposed to the bypass version). This results in doubled benefits: Increased comfort as well as energy and heating cost savings.
This is achieved by supplying the returning hot water of the circulation directly to the upper thermal layer of the water heater so that it does not have to flow through the complete tank. At the same time, there is always enough hot water available to supply the fittings without inconvenient delays.

Hot water circulation system WZS 100

NEW

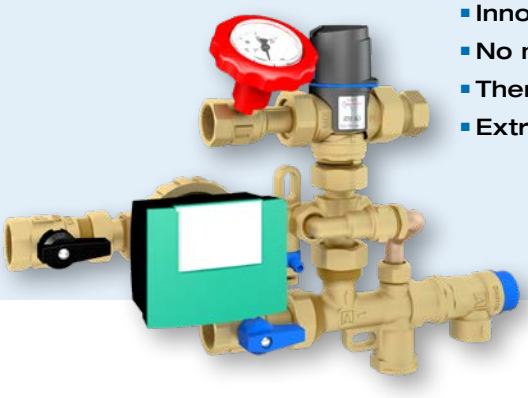

- Innovative, compact and reliable hydraulic assembly
- No mixing of the temperatures in the stratified storage tank
- Thermally controlled hot water temperature (with scald protection)
- Extremely low mounting effort and fast commissioning

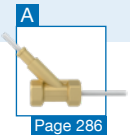
A Page 286

A Page 287

Application

Circulation system for professional implementation of a service water circulation connection to an energy storage tank (hot water tank/stratified storage tank) which is operated at temperatures higher than 60 °C either permanently or temporarily. Also suitable for stratified hygienic storage and bivalent service water tanks. If used with older existing systems (for example, hot water tanks with wood-, solar-, heatpump-, gas- or oil-fired burner), controlled circulation to meet actual demands results in high energy savings. The hot water circulation system is optimally suited for use with renewable energies in domestic technology applications, primarily in single and two family homes.

Description

Compact, pre-assembled and tightness-tested hot water circulation system in form-fit heat insulation part, consisting of thermal mixing valve with integrated scald protection, circulation pump with all necessary functional components such as shut-off valves, variable safety group assembly, backflow preventer and connection parts as per DIN 1988.

The hydraulic separation of the flow paths ensures correct operation of the circulation pump since it has to overcome only one backflow preventer in any operating condition and thus avoids mixing of the cold water inlet in the circulation path.

9

Technical specifications

System connections
G¾ female

Connection lance / bypass
G½ female

Operating temperature range
Medium: Max. 95 °C

Mixing temperature
35/60 °C

System pressure
Max. 10 bar

Flow coefficient Kvs
1.6 m³/h

Safety valve
Opening pressure: 6 bar

Insulation
Polypropylene EPP

Dimensions
W x H x D: 320 x 300 x 146 mm

Technical specification circulation pump Wilo-Star-Z NOVA

Degree of protection
IP 42

Supply voltage
AC 230 V, 50 Hz

Power input
2–4.5 W

DG: G, PG: 2	Part no.	Price €
Hot water circulation system WZS 100	68405	

Hot water circulation system WZS 100

Dimensions (mm)

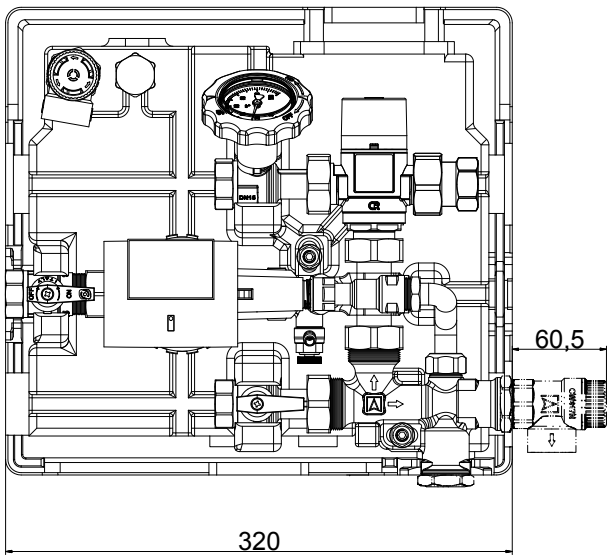

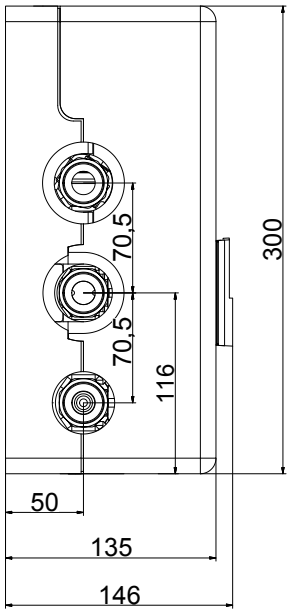

Hot water circulation system WZS 75

NEW

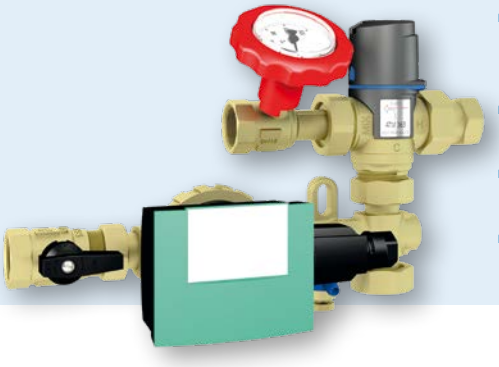

- **Compact hydraulic assembly for storage tanks with existing safety-related equipment or for retrofitting of systems**
- **Easy connection of a circulation line with existing safety-related equipment**
- **Thermally controlled hot water temperature (with scald protection)**
- **Considerable time savings during mounting**

A 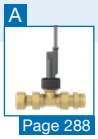
Page 288

A
Page 287

Application

Circulation system for professional implementation of a service water circulation connection to an energy storage tank with existing safety-related equipment (hot water tank/stratified storage tank) which is operated at temperatures higher than 60 °C either permanently or temporarily. WZS 75 is ideal for retrofitting existing systems, primarily in single and two-family homes.

Description

Compact, pre-assembled and tightness-tested hot water circulation system, consisting of thermal mixing valve with integrated scald protection, thermometer, shut-off valve, drain valve for venting or flushing the circulation line as well as connection parts as per DIN 1988. The hydraulic assembly is suitable for storage systems which are already fitted with with safety-related equipment such a diaphragm safety vales backflow preventers or where such equipment is to be installed in the form of conventional individual components. Storage systems without safety-related equipment can be retrofitted with the safety group assembly WSG 150.

WZS 75 optimises temperature control in the hot water circulation and ensures that the temperature in the storage system is not unnecessarily reduced. A partial volume of the returning circulation water flows directly to the cold water inlet of the thermal mixing valve via an internal connection. Depending on the water temperature at the inlet of the mixing valve, it is then controlled as required.

Technical specifications

System connections
G¾ female, G1 female

Operating temperature range
Medium: Max. 95 °C

Mixing temperature
35/60 °C

System pressure
Max. 10 bar

Flow coefficient Kvs
1.6 m³/h

Technical specification circulation pump Wilo-Star-Z NOVA

Degree of protection
IP 42

Supply voltage
AC 230 V, 50 Hz

Power input
2–4.5 W

Scope of delivery
Assembly group without insulation

DG: G, PG: 2	Part no.	Price €
Hot water circulation system WZS 75	68416	

Hot water circulation system WZS 75

Dimensions (mm)

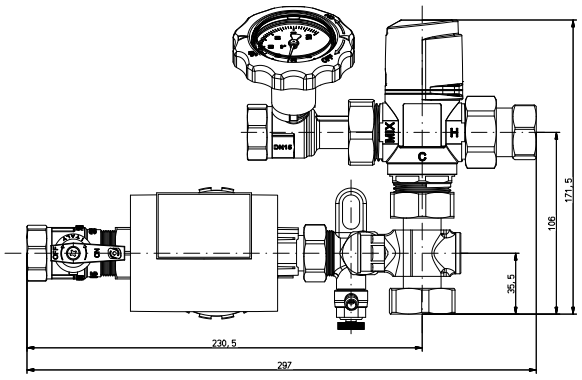

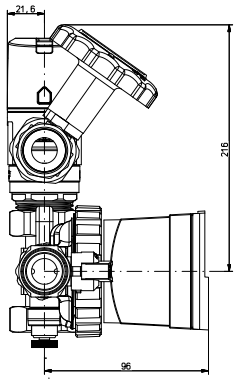

Thermal mixing valve ATM 363 WMG

NEW

- **Compact assembly for storage tanks with existing safety group assembly and pump**
- **Thermally controlled hot water temperature (with scald protection)**
- **Easy mounting without time-consuming, extensive insulation work**
- **Circulation lance can be connected**

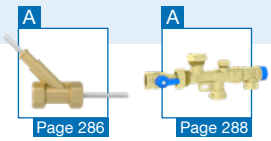

Page 286 Page 288

Application

Mixing valve for control of hot water in drinking water systems, boilers or drinking water heaters as per EN 806. Suitable for implementing or retrofitting a service water circulation connection to an energy storage tank (hot water tank/stratified storage tank) with existing safety-related equipment and pump.

Description

Compact, pre-assembled and tightness-tested assembly in form-fit insulation. ATM 363 WMG consists of an adjustable thermostat mixing valve, connection pieces as per DIN 1988 and a flow distribution unit with backflow preventer, lance connection and drain valve for venting or flushing the circulation line. Mixing valve with control knob with temperature scale (35/60 °C) for easy adjustment of the temperature of the water to be mixed. A cap protects the control knob against improper operation; it can be lead-sealed to help prevent unwanted adjustments. The selected adjustment is visible through the window in the cap. If the cold water line is interrupted, the mixing valve automatically closes the hot water supply to help protect against scalding.

9

Technical specifications

System connections
G¾ female, G1 female

Connection lance / bypass
G½ female, G1 female

Operating temperature range
Medium: Max. 95 °C

Mixing temperature
35/60 °C

System pressure
Max. 10 bar

Flow coefficient Kvs
1.6 m³/h

Insulation
Polypropylene EPP

DG: G, PG: 2	Part no.	**Price €**
Thermal mixing valve ATM 363 WMG	68417	

Thermal mixing valve ATM 363 WMG

Dimensions (mm)

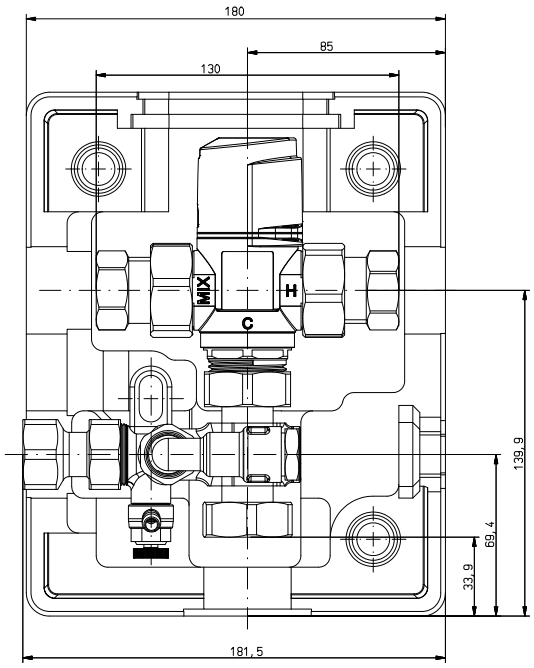

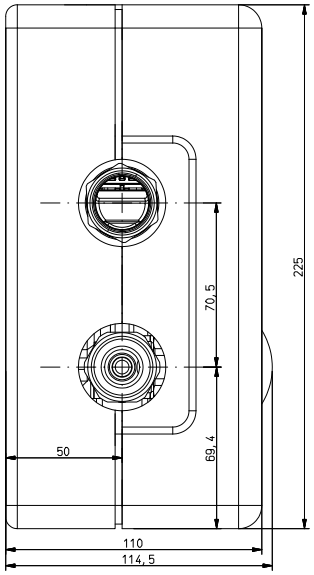

Thermal mixing valve ATM 363 WSG

NEW

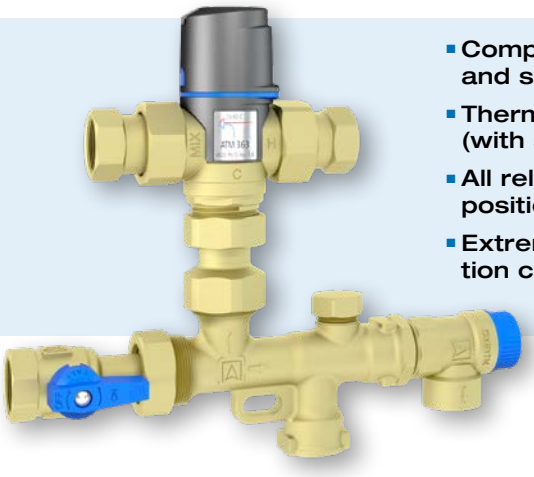

- **Compact assembly for tankless water heaters and solar-heated drinking water heaters**
- **Thermally controlled hot water temperature (with scald protection)**
- **All relevant backflow preventers at the correct positions**
- **Extremely time-saving as compared to installation consisting of many individual parts**

Application

Mixing valve with boiler safety group assembly for controlling hot water at solar-heated drinking water heaters and hot water storage tanks with hot water heating according to flow principle. Ideal for applications in which circulation is not necessary or if the water heater already has a circulation connection.

Description

Compact, pre-assembled and tightness-tested assembly consisting of adjustable thermal mixing valve, safety group assembly with integrated backflow preventers, shut-off valve and safety valve. Mixing valve with control knob with temperature scale (35/60 °C) for easy adjustment of the temperature of the water to be mixed. A cap protects the control knob against improper operation; it can be lead-sealed to help prevent unwanted adjustments. The selected adjustment is visible through the window in the cap. If the cold water line is interrupted, the mixing valve automatically closes the hot water supply to help protect against scalding.

9

Technical specifications

System connections
G¾ female

Operating temperature range
Medium: Max. 95 °C

Mixing temperature
35/60 °C

System pressure
Max. 10 bar

Flow coefficient Kvs
1.6 m³/h

Safety valve
Opening pressure: 6 bar

Scope of delivery
Assembly group without insulation

Dimensions (mm)

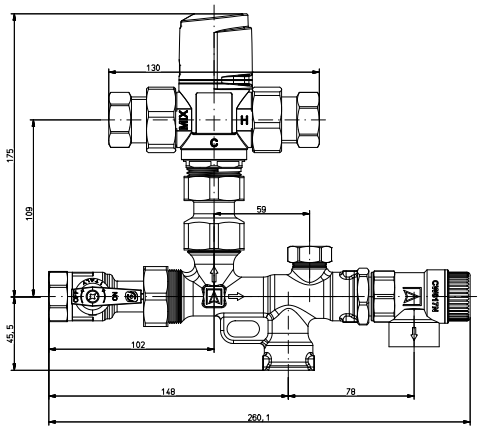

DG: G, PG: 2	Part no.	Price €
Thermal mixing valve ATM 363 WSG	68419	

Thermal mixing valves ATM

NEW

- High accuracy, fast response
- With integrated scald protection
- Maintenance-free
- Ideal for showers and smaller underfloor heating circuits
- Cap with scale window, ready for lead sealing (ideal for public buildings)

Application

Universal units for controlling hot water in sanitary applications, solar-heated hot water storage tanks according to flow principle or for smaller underfloor heating circuits which are directly connected to the flow (max. 60 °C). Also for panel heating systems such as wall or underfloor heating systems which require a constant mixed water temperature to avoid damage to floors and pipes. Suitable for drinking water or water with up to 50 % glycol.

Description

Thermal mixing valve as per EN 1111 with base made of brass and upper part and control knob made of high-strength plastic. With temperature scale (20/43 °C or 35/60 °C) for easy adjustment of the temperature of the water to be mixed. A cap protects the control knob against improper operation; it can be lead-sealed to help prevent unwanted adjustments. The selected adjustment is visible through the window in the cap. If the cold water supply is interrupted, the mixing valve automatically closes the hot water supply to protect against scalding. The new chamber geometry also helps to avoid damage caused by overpressure during closing (backflow preventer cold water side). Due to the internal geometry and the materials used for the control surfaces, control errors or failure (resulting, for example, by lime deposits on the sealing surfaces) are practically excluded. ATM is maintenance-free.

Technical specifications

Operating temperature range
Medium: Max. 90 °C
(short-term 110 °C)

Nominal pressure
Max. 10 bar
Dynamic operating pressure: Max. 5 bar

Flow rate
Flow coefficient 1.6 m³/h or 2.5 m³/h

Accuracy
± 2 °C (EN 1111)

Material
Housing: Brass (CW626N), dezincification-resistant
Upper part: Plastic (ABS)
Control knob: Plastic (ABS)
Seals: EPDM

Connection
Male or female threads (see table)

Control knob with temperature scale

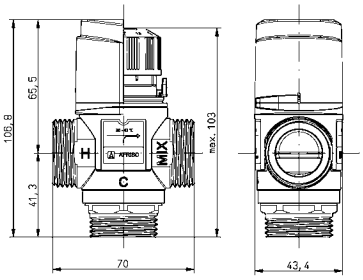

DG: G, PG: 2	DN	Flow coefficient value	Connection	Temperature	Part no.	**Price €**
ATM 341	15	1.6 m³/h	G¾ male thread	20 / 43 °C	78247	
ATM 343	15	1.6 m³/h	G¾ male thread	35 / 60 °C	78246	
ATM 331	20	1.6 m³/h	Rp¾ female thread	20 / 43 °C	78249	
ATM 333	20	1.6 m³/h	Rp¾ female thread	35 / 60 °C	78248	
ATM 361	20	1.6 m³/h	G1 male thread	20 / 43 °C	78245	
ATM 363	20	1.6 m³/h	G1 male thread	35 / 60 °C	78244	
ATM 561	20	2.5 m³/h	G1 male thread	20 / 43 °C	78283	
ATM 563	20	2.5 m³/h	G1 male thread	35 / 60 °C	78284	

Circulation lance ZL 2

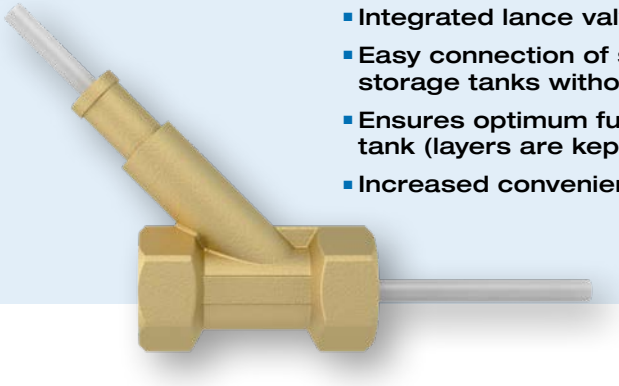

- **Integrated lance valve, design with no dead space**
- **Easy connection of stratified combination storage tanks without circulation connection**
- **Ensures optimum function of the stratified storage tank (layers are kept)**
- **Increased convenience due to shorter lead time**

Application

Hydraulic connection assembly for tanks with drinking water flow heating to allow circulation mode for the domestic drinking water supply. Can be used in conjunction with the hot water circulation system WZS 100.
A stratified combination storage tank (corrugated pipe tank) which heats up drinking water according to the flow principle usually does not have a circulation connection. This frequently results in a connection problem. With the circulation lance, the circulation connection is made via the hot water outlet end. Thus, correct function of the stratified storage tank is ensured; the thermal layers are kept. The results in heating cost savings and electrical energy savings.

Description

Circulation lance for mounting in hygienic tank, consisting of part SPP with sleeve ø 8 mm and PE-Xc pipe ø 8 mm. A part of the circulation return volume is resupplied to the tank via the lateral circulation connection of ZL 2, heated up by means of the counter flow method and removed via the hot water connection of ZL 2. This is done via the circulation hose located in the heat exchanger pipe of the tank. Returning the circulating hot water in an optimum way ensures that the layers in the stratified storage tank remain intact.

Technical specifications

System connections
Rp1 female

Connection circulation return
G¾ male

Operating temperature range
Medium: Max. 110 °C

System pressure
Max. 6 bar

Material
Brass

Circulation hose
Ø 8 mm meshed polyethylene, 1.5 m long

Approval
Lance valve: SVGW certificate no. 0809-5419

Function principle external circulation

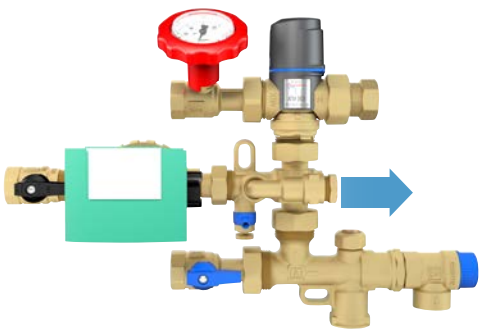

WZS 100 with circulation lance

In the case of external circulation, a partial volume is supplied to the stratified storage tank via the circulation connection and reheated in the upper area of the tank via the circulation lance. In the thermal mixing valve, the two partial flows are mixed together again to the adjusted reference temperature. Since only a part of the circulating water is heated directly in the top thermal layer of the tank, a mixing of the thermal layers is excluded.

DG: G, PG: 2	Part no.	**Price €**
Circulation lance ZL 2	68406	

Circulation controller EC 1

NEW

- **Demand-controlled pump control for hot water circulation**
- **Legionellae protection function**
- **High energy savings due to intelligent pump control**
- **Intuitive use, reliable operation**

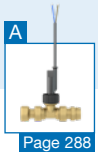

Page 288

Application

For demand-controlled optimum control of the hot water circulation in conjunction with the hot water circulation system WZS 100. Unnecessary periods of operation (time control or thermal control) and energy costs can be reduced.

Description

Circulation controller in wall mounting housing with controller adjustment via menus. A flow switch connected to EC 1 (for example, circulation switch ZS 2) monitors water withdrawal at the hot water end. After short opening of a tap in the hot water line, the circulation pump is switched on and stopped after an additional running time adjusted by the user has elapsed. This turns any standard fitting in the hot water system into a kind of "remote control".

This is energy savings in two ways: due to the demand-controlled pump, the storage tank is not cooled down unnecessarily by circulating the hot water, and the shorter running time of the circulation pump saves energy.

9

Technical specifications

Functions
- Circulation control
- Time control
- Additional pump running time

Operating temperature range
Ambient: 0/40 °C

Display
LC display, multifunctional combination display
Menu control with 3 pushbuttons

Supply voltage
AC 220 - 240 V

Inputs
1 x sensor input for circulation switch

Switching output
1 semiconductor relay

Housing
Wall mounting housing made of plastic (PC, ABS, PMMA)
Panel mounting possible
W x H x D: 172 x 110 x 49 mm
Degree of protection IP 20 (EN 60529)
Protection class II

Scope of delivery
- Circulation controller
- Mounting material

i

For full functionality of the circulation controller, the circulation switch ZS 2 is required.

DG: G, PG: 2	Part no.	**Price €**
Circulation controller EC 1	68407	

Accessories WZS series

Circulation switch ZS 2

Application

Can be used in conjunction with the circulation controller EC 1 for demand-controlled circulation control via opening and closing of a tap.

Description

Circulation switch in pipe piece for direct mounting in the insulation of the hot water circulation system WZS 100.
Mandatory for optimum operation of the circulation controller EC 1.

Technical specifications

Brass pipe piece
G¾ female, DN 20, PN 10

Operating temperature range
Medium: Max. 100 °C

Switching point
1.5 ± 0.7 l/min in horizontal mounting position
1.8 ± 0.75 l/min in other mounting position

Switching contact
Closes if value is exceeded

Output
Voltage-free contact

Sheathed cable
Length: 1.5 m PVC

Water safety group assembly WSG 150

Safety group assembly for sealed hot drinking water systems or drinking water heaters as per EN 806 to secure the inlet of the energy storage tank (hot water tank/stratified storage tank) and for protection against overpressure and back-circulation.

Compact, tightness-tested storage tank connection kit with integrated backflow preventers, shut-off valve and safety valve. Easy adaptation to on-site requirements by rotating the safety valve. WSG 150 is very easy to mount, even directly to a water heater. WSG 150 can be extended at the 1"connection (remove cap).

System connections
G¾ female

Operating temperature range
Medium: Max. 95 °C

System pressure
Max. 10 bar

Safety valve
Opening pressure: 6 bar
Rp ¾ x Rp ¾

Dimensions (mm)

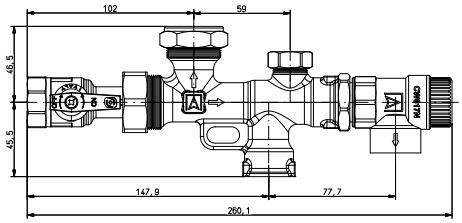

DG: G, PG: 2	Part no.	Price €
Circulation switch in pipe piece ZS 2	68408	
Water safety group assembly WSG 150	**68412**	

Boiler safety equipment groups

Boiler safety group assembly WSG 75/10

Application

For sealed hot drinking water systems or drinking water heaters as per EN 806, DIN 1988 and DIN 4753-1 and for protection against overpressure.

Description

Combination fitting with rotatable safety valve 10 bar, Bourdon tube pressure gauge 0/16 bar, shut-off fitting, check valve and test screw. Noise characteristics as per DIN 4109 class 1.

Technical specifications

Connections
Soldered screw connection Ø 18 mm at both ends

Safety valve
10 bar, rotatable
Rp ½ x Rp ¾
Outlet thread G¾
Maximum heating capacity : 75 kW

Operating pressure
10 bar

Dimensions
W x H: 95 x 95 mm

Housing
Brass

Bourdon tube pressure gauge
0/16 bar, Ø 50 mm, connection G¼

Options
- Safety valve 6 or 8 bar
- Pressure gauges with other pressure ranges
- Other connection types

Boiler safety group assembly BFK 12

For sealed hot drinking water systems or drinking water heaters as per EN 806, DIN 1988 and DIN 4753-1 and for protection against overpressure.

Combination fitting with safety valve 6 bar or 10 bar, shut-off fitting, check valve and test screw. Noise characteristics as per DIN 4109 class 1.

Connections
Compression fitting at both ends Ø 15 mm

Safety valve
10 bar or 6 bar

Operating pressure
10 bar

Dimensions
W x H: 90 x 98 mm

Housing
Brass

9

DG: G, PG: 2	Safety valve			Part no.	Price €
Boiler safety group assembly BFK 12/6	6 bar	1	-	**77986**	
Boiler safety group assembly BFK 12/10	10 bar	1	-	**77988**	
Boiler safety group assembly WSG 75/10	10 bar	1	-	**77976**	

Water filter WAF 04 R with pressure reducer, backwashable

- With integrated pressure reducer
- Inlet pressure compensation for constant outlet pressure
- Rotatable cover to indicate the next backwashing date
- Transparent filter cup shows degree of pollution of the filter
- Innovative backwashing system – fast and thorough cleaning of the filter, low water consumption

Application

For the protection of drinking water installations against corrosion as per DIN 1988. The pressure reducer reduces the inlet pressure to an even, system-specific pressure in order to protect the installation and to ensure economical water consumption. Water filters help to keep pollutants such as rust particles and sand grains from reaching the domestic water installation and thus protect valves, machines, flow heaters, etc. from malfunctions caused by pollution.
Ideal for modernisation of domestic water installations where an existing filter needs to be replaced.

Description

DVGW-tested water filter, compact plastic version with backwashable fine filter, integrated pressure reducer and pressure gauge for the outlet pressure. The fine filter insert consists of an upper part and a combined lower part. In the operating state "Filtration", the small upper filter is closed so that the water can only flow through the main filter from the outside to the inside. When the ball valve for "Backwashing" is opened, the filter is pressed down until the water supply to the outside of the main filter is interrupted. At the same time, the water flow through the upper filter is opened. The water required for cleaning the filter flows through the upper sieve, the rotating impeller and the main filter from the inside to the outside. This ensures effective cleaning of the filter across the entire surface of the sieve at full inlet pressure. When the ball valve is closed again, the filter automatically resumes normal operation.
The pressure reducer operates on the basis of a force comparison system, i.e. the force of a spring counteracts the force of a diaphragm. The inlet pressure neither acts in the opening nor in the closing direction. Therefore, pressure changes at the inlet pressure side do not affect the outlet pressure.

Technical specifications

Medium
Drinking water

Inlet pressure
Max. 16 bar

Outlet pressure
1.5 – 6 bar

Operating temperature range
Medium: Max. 30 °C

Mounting position
Vertical or horizontal with filter cup down

Connection
G¾, G1, G1¼ as required

Material
Housing: High-grade plastic
Fine filter: Stainless steel, mesh size 110 µm
Filter cup: Shock-resistant, transparent plastic

DVGW approval
NW-9311AT2316

Automatic backwashing unit RA 01 (accessory) for setting the intervals of automatic backwashing.

DG: G	PG	Part no.	Price €
WAF 04 R – G¾	1	42714	
WAF 04 R – G1	1	42715	
WAF 04 R – G1¼	1	42716	
Accessories			
Automatic backwashing unit RA 01 for WAF 04 R	4	42739	

Domestic water system centre HWSC

reddot design award
winner 2013

Pressure-reduced supply outlet with backflow preventer, safety valve and drain hose

Heat-insulated assembly with transparent door for easy monitoring and backwashing (mark via memory pointer)

CILP connections for an easy fitting of pipes

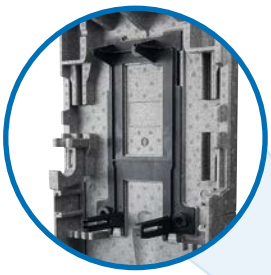

Sophisticated wall bracket with 3-point fixing via hanger bolts for fast and easy mounting, even if the wall is not level.

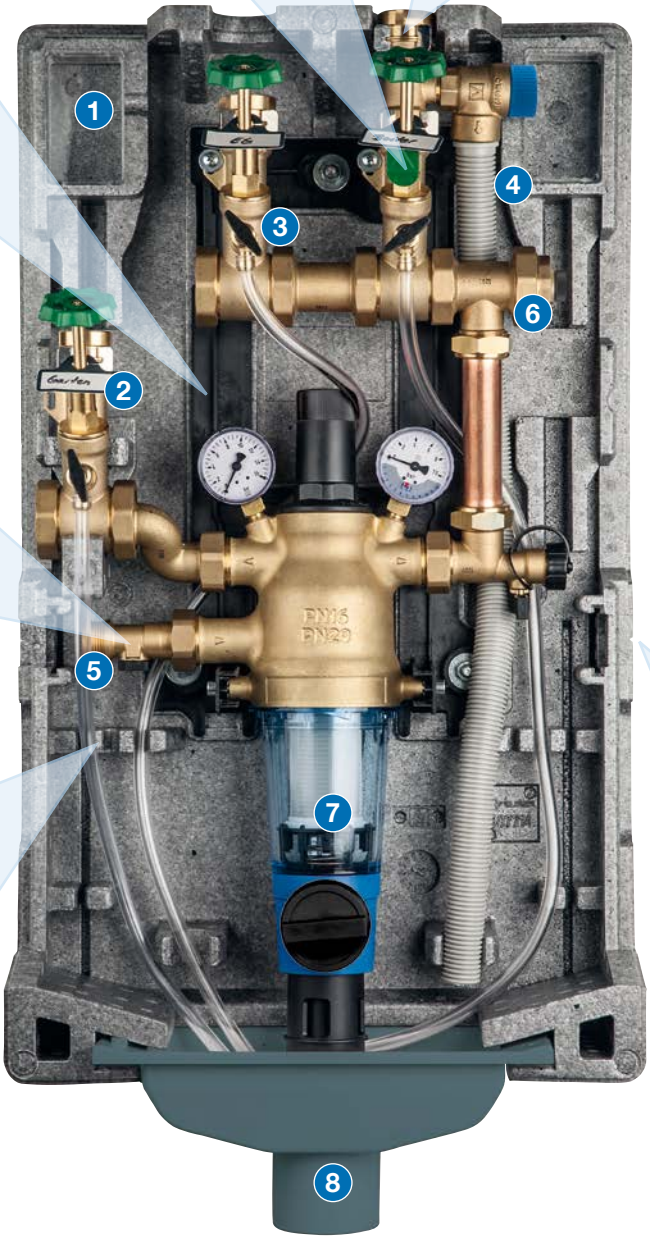

Fast and easy conversion of connection from left to right. Only a few parts need to be dismounted. Interfaces are already defined in the insulation

Guides in the insulation for professional installation of the drain and outlet hoses

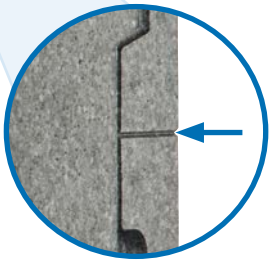

Mark at standard height of water meter (0.90 – 1.10 m) as a mounting aid

9

1. Storage compartment for spare seals/silicone grease
2. Filtered high pressure outlet (as per DIN 1988), e.g. for garden line
3. Pressure-reduced supply outlets with drain hoses (1 outlet with backflow preventer)
4. Safety valve (6 bar) outlet hose
5. Backflow preventer, DVGW approval
6. Connection G¼ for sampling valve
7. Filter combination with fine filter and pressure reducer, DVGW approval
8. Drain unit consisting of funnel (DN 75) and reducing adaptor (DN 75/DN 50)

Domestic water system centre HWSC

- **Extremely compact system centre 395 x 760 mm (W x H)**
- **Lightning-fast, easy installation**
- **Innovative backwashing system – fast and thorough cleaning of the filter element, low water consumption**
- **Modular design: Can be extended by additional pressure-reduced outlets, automatic backwashing unit, refill combinations, etc.**

Automatic backwashing unit RA 01 (accessory) for setting the time intervals

reddot design award winner 2013

Application

For drinking water installations as per EN 806, DIN 1988 and DIN 4753-1. The system centre combines all functions of conventional water distribution installations in a small-footprint unit: the pressure reducer reduces the inlet pressure to an even, system-specific pressure in order to protect the installation and to ensure economical water consumption. The water filter keeps pollutants such as rust particles or sand grains from reaching the domestic water installation, thus protecting valves, machines, boilers, etc. from malfunctions caused by dirt. With its straightforward design and unobtrusive colour, the domestic water system centre fits in perfectly with modern equipment rooms, basements and utility rooms.

Description

Compact, tightness-tested domestic water system centre as a complete solution for the distribution of drinking water in buildings. The base version of HWSC consists of a backflow preventer, filter combination with fine filter and pressure reducer, drain unit with connection possibility to the wastewater system, three supply outlets, safety valve and all function components. The individual components are DVGW-certified or comply with the DVGW regulations. The assembly is contained in a form-fit insulation for easy access and operation. The integrated transparent front door allows for checking the system pressure and the safety valves and provides easy access to start backwashing; it is not necessary to remove the upper part of the insulation. The memory pointer on the door lets you set the date for the next backwashing procedure.

HWSC excels with a dramatic reduction of the installation time: a drilling template is shipped with the unit for precise positioning of the three holes. Hanger bolts allow for precise adjustment of the domestic water system centre to the wall and enable easy horizontal and vertical alignment. HWSC features a variable height adjustment from 65 to 115 mm to allow for precise adaptation to the individual distance of the water meter from the wall. The default connection setting is intended for left-side connection, but HWSC can be converted to right-side connection in a matter of minutes.

The integrated filter combination features an innovative backwashing system with rotating impeller which ensures fast and thorough cleaning of the fine filter and low water consumption. The entire sieve surface of the filter insert is cleaned at high pressure. The pressure reducer reduces the inlet pressure to an even, system-specific pressure; part of the water flows directly and without pressure reduction to the high-pressure outlet for the garden line. If this is not required, it can be converted into an additional pressure-reduced supply outlet. The insulation can accommodate up to four supply outlets; any additional outlets must be mounted outside the insulation.Due to the modular design and the defined connections, it is easy to fit extensions with an automatic backwashing unit, a refill combination for filling heating systems and the connection of a sampling valve or a water softening system.

Door for fast checking the system pressure, the safety valve of for starting backwashing.

Domestic water system centre HWSC

Technical specifications

Medium
Drinking water

Inlet pressure
Max. 16 bar

Operating temperature range
Medium: 5/30 °C

Mounting position
Vertical
Supply outlets to the top

Dimensions (housing)
W x H x D: 395 x 665 x 210 mm

Weight
Approx. 12 kg

Connection trinking water
Inlet: R1
Supply system: G¾ female thread

Connection waste water
DN50, DN75

Material

Fittings:	Brass (CW617N)
Insulation:	Polypropylene EPP
Filter housing:	Brass (dezincification-resistant)
Fine filter:	Non-corroding steel
Seals:	EPDM

DVGW approval
All components are DVGW-conform. Components with DVGW approval: filter combination, backflow preventer, seals

SVGW approval
Components with SVGW approval:
Filter combination
Certificate no. 1310-6204

DG: M	PG	Part no.	**Price €**
Domestic water system centre HWSC	2	**42755**	
Connection kit for refilling of heating system	2	42757	
Connection kit for water softening	2	42756	
Extension supply outlet G¾ female thread	2	42758	
Automatic backwashing unit RA 01	4	42739	

Domestic water system centre HWSC

Dimensions (mm)

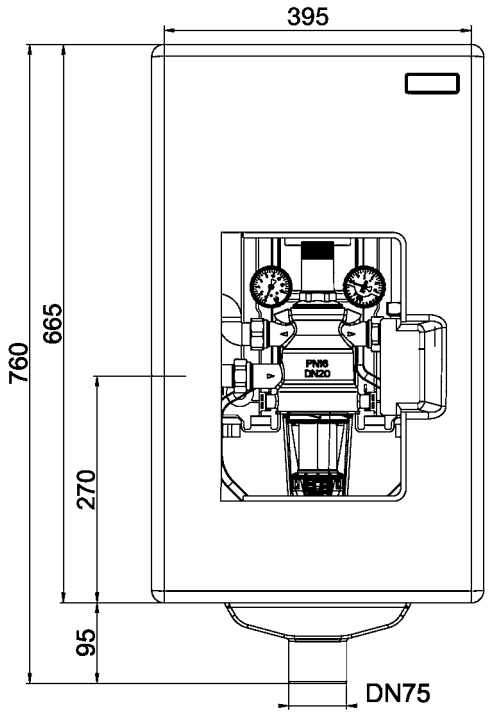

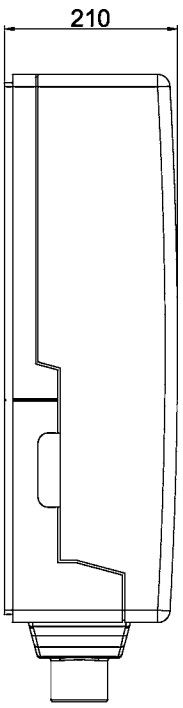

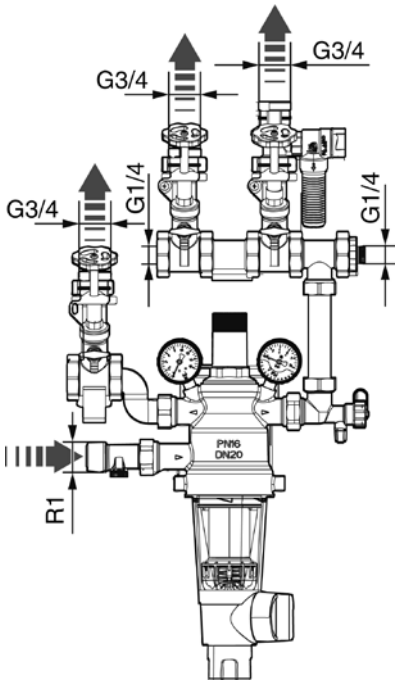

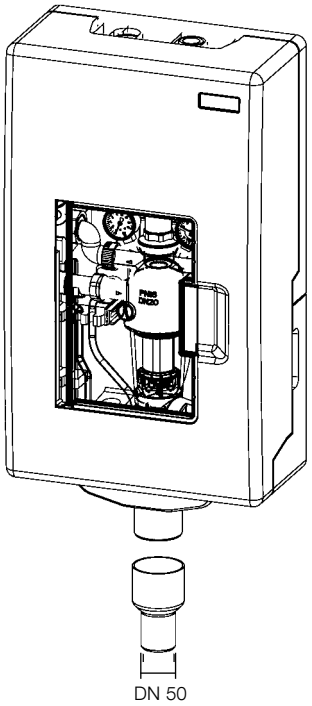

9

Oil tank conversion kits II + III for rainwater usage in gardens

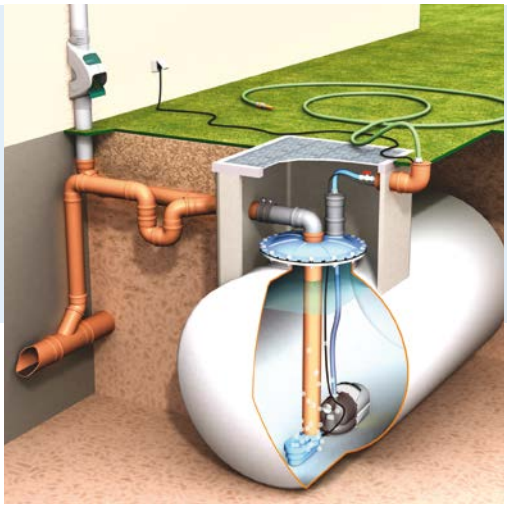

Application

Oil tank conversion made easy. We supply a number of special rainwater components for quick and easy installation of rainwater harvesting systems. The tank cover is the most important component of the kit as it enables simple and clean piping through two openings. The pipe is routed from the downpipe to the tank top and connected to the filter system. Depending on the site conditions and the available space in the manhole, it is recommended to install a downpipe filter or a cartridge filter. Pipe couplers are used to connect the filter elements. The pipe to the sewage system must form a siphon using the drain pipe elbows. A self-priming jet pump with integrated pressure and dry run protection is ideally suited for water withdrawal.

9

Scope of delivery

Oil tank conversion kit II for rainwater usage in gardens (up to 75 m² roof area):

- Plastic manhole cover Ø 500 mm

- Rainus downpipe filter with 2 pipe couplers (DN 100)

- Calmed inlet

Oil tank conversion kit III for rainwater usage in gardens (up to 210 m² roof area):

- Plastic manhole cover Ø 500 mm

- Cartridge filter PF with 2 pipe couplers (DN 100)

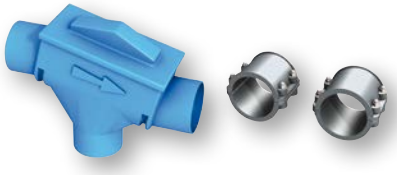

- Calmed inlet

i

See pages 57, 296 for inner linings for rainwater.

See pages 7, 8, 12, 98 for level measurement.

DG: M, PG: 1			Part no.	**Price €**
Oil tank conversion kit II	1	-	**53076**	
Oil tank conversion kit III	1	-	**53077**	

Rainwater inner lining AR-SM with magnets

- **Operation without vacuum type leak detector, no pressure, no current**
- **Easy and fast installation by means of powerful neodymium magnets**
- **Perfectly fitting, robust PVC lining**

Application

For converting cylindrical steel DIN tanks such as decommissioned fuel oil tanks, diesel tanks or storage tanks into reliable, high-grade rainwater storage tanks. No pressure or flow required. The rainwater inner lining AR-SM with magnets is suitable for storing rainwater in cylindrical steel tanks (3,000 to 60,000 litres).

Description

The new rainwater inner lining AR-SM with magnets allows owners to convert a decommissioned steel tank into a rainwater storage tank with very little effort.
Please note: In the case of coated steel tanks, verify that the attractive force of the magnets is sufficient.

The rainwater inner lining AR-SM is a PVC lining with flat, round, extremely powerful neodymium magnets welded into lateral and top areas. The lining is reliably held at the inner wall by the magnets - no pressure or flow are required inside the tank. A tank can be conveniently converted into a rainwater storage tank: First, the tank is measured and then a precisely fitting lining is manufactured. The tank is prepared on the basis of a defined procedure (thorough cleaning of the tank, corrosion checks, etc.); depending on the condition of the tank, a fleece layer is placed on the tank floor for impact protection.

Then the lining is fitted in the tank and inflated by means of a blower; if necessary, the final fit is achieved by means of a vacuum pump. When the PVC lining is inflated, the magnets click into place exactly where planned. The fit of the PVC lining is checked and then it is fastened in the manhole by means of a fastening ring. The tank is ready for storing rainwater immediately after the lining has been installed.

Scope of delivery

Rainwater inner lining AR-SM, made of plastic film Sikaplan® WP5140-08 black, film thickness 0.8 mm, for closed tanks, with all neodymium magnets welded into the film in the lateral and top areas, with film flange for the standard fastening ring.

i

Not only cylindrical DIN steel tanks, but certain steel tanks with different geometrical shapes can be converted into rainwater storage tanks.
Please enquire.

i

Depending on the local conditions and on the tank, a fleece lining may be required in the bottom area of the tank as an impact protection. Different dome distances and special dimensions are manufactured at the same conditions.

	PG	Part no.	**Price €**
Extra charge for additional access chamber			
500 mm	1	08027	**net**
600 mm	1	08024	**net**
Accessories (DG: H)			
Fastening ring Ø 500 mm	3	43900A	
Fastening ring Ø 600 mm	3	43900C	
Fleece LSV2 1 x 2 m plate	1	43952	

DG: H, PG: 1	Part no.	**Price €**
3,000 l	43889.003	
5,000 l	43889.005	
7,000 l	43889.007	
10,000 l	43889.010	
13,000 l	43889.013	
15,000 l	43889.015	
16,000 l	43889.016	
20,000 l	43889.020	
25,000 l	43889.025	
30,000 l	43889.030	
40,000 l	43889.040	
50,000 l	43889.050	
60,000 l	43889.060	

Backup controller kit RENA for rainwater storage tanks

- **Microprocessor-controlled supply of drinking water to rainwater tanks with connected water station**
- **Dry run protection and safety shutdown**
- **2 program times for normal or increased water consumption**
- **Easy handling – fast installation**

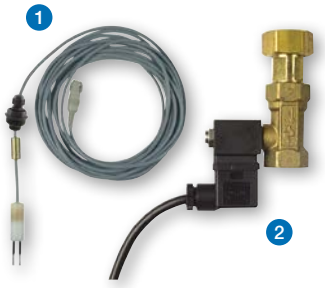

1 Level probe
2 Solenoid valve

Application

For monitoring rainwater tanks for sufficient water level. The backup controller RENA, consisting of control unit RENA, probe and solenoid valve, is designed for fully automatic supply of drinking water to rainwater tanks with connected water station. Continuous operation without frequent on and off cycles, two selectable program times for normal or increased water consumption, with leak monitoring, dry run protection and protection against deposits.

Description

The complete backup controller kit consists of a control unit, indicators and controls and a Schuko CEE socket for connection of the water station, a probe for the water tank and a solenoid valve for connection to the water tap. If, as a result of insufficient precipitation or considerable water withdrawal, the level in the tank falls below a specific value, the solenoid valve is opened and fresh water from the drinking water mains system is supplied. 2 program times are selectable, depending on the water consumption (e.g. garden watering, car wash). In order to avoid the formation of deposits at the solenoid valve, the valve is opened for one second and closed again three times in a row every week. RENA features a safety shut-off system that responds to leaks in the tank or the pipes.

Technical specifications

Functions
Fully automatic backup controller for supplying drinking water to rainwater tanks with connected water station, with leak monitoring, dry run protection and protection against deposits.

Control unit RENA
Control unit with microprocessor

Operating temperature range
Ambient: 0/40 °C

Schuko CEE socket
AC 230 V (fuse T 10 A)

Supply voltage
AC 230 V

Dimensions
W x H x D: 100 x 188 x 65 mm

Degree of protection
IP 20 (EN 60529)

Solenoid valve
For drinking water and rainwater
W x H x D: 95 x 80 x 100 mm
Connection: G½ x G¾
Flow rate: Max. 50 l/min
(inlet pressure 4 bar, open outlet)
Supply voltage: AC 230 V
Mains cable: 3 m
Degree of protection: IP 65 (EN 60529)

Level probe
For drinking water and rainwater
Supply voltage: AC 6 V

Scope of delivery RENA backup controller kit
- Control unit RENA
- Level probe RENA with 15 m probe cable
- Solenoid valve (½ x ¾) with 3 m mains cable
- Operating instructions

DG: H, PG: 4			Part no.	Price €
RENA backup controller kit, complete	1	-	53100	
Control unit RENA	1	-	53101	
Level probe RENA with 15 m probe cable	1	-	53102	
Level probe RENA with 25 m probe cable	1	-	53122	
Solenoid valve G½ x G¾	1	-	53134	

Pressure gauges for heating installations

Capsule pressure gauges/accessories for pressure gauges

Pressure gauges and thermometers with capillary tube

Pressure gauges for differential pressure

CHAPTER 10

Mechanical pressure measuring instruments (pressure gauges)

OVERVIEW

Mechanical pressure measuring instruments at a glance 300

Pressure transducers at a glance 302

Technical information pressure gauges 304

Pressure gauges with capillary tube 310

BOURDON TUBE PRESSURE GAUGES

Bourdon tube pressure gauges for boiler and heating system applications 305

Bourdon tube pressure gauges for heating/plumbing applications 307

Bourdon tube pressure gauges with plastic capillary tube 311

Bourdon tube pressure gauges with copper capillary tube 316

Bourdon tube pressure gauges for industrial applications 321

Standard Bourdon tube pressure gauges for differential pressure 324

CAPSULE PRESSURE GAUGES

Standard capsule pressure gauges 325

ACCESSORIES FOR PRESSURE GAUGES

Shut-off cocks/valves for pressure gauges 327

Overpressure safety device, pressure gauge push-button stop cock 329

Accessories for pressure gauges 330

Mechanical pressure measuring instruments at a glance

		Standard capsule pressure gauges	Capsule pressure gauges for chemical applications	Standard Bourdon tube pressure gauges/gauges for industrial applications	Bourdon tube pressure gauges/ stainless steel pressure gauges Pressure gauges for chemical applications
NG 40	Housing size			•	•
NG 50				•	•
NG 63		•	•	•	•
NG 80		•		•	•
NG 100		•	•	•	•
NG 160		•	•	•	•
NG 250				•	
Bottom process connection		•	•	•	•
Centre back process connection		•	•	•	•
Process connection both ends					
-25/0 mbar to -1,000/0 mbar	Ranges	•	•	**• (-1 bar)**	**• (-1 bar)**
0/25 mbar to 0/1,000 mbar		•	•		
0/0.6 bar to 0/1,600 bar				**• (max. 1,000 bar)**	•
0/2,500 bar to 0/4,000 bar					**Pressure gauges for high pressures**
0/10 mbar to 0/25 bar					
≥ Class 1.6	Accuracy	•	•	•	•
≥ Class 1.0		•**		•	•
≥ Class 0.6				**Precision pressure gauges**	**Precision pressure gauges**
≥ Class 0.25				**Precision pressure gauges**	
Operating temperature range -20/+60 °C	Application areas	•		•	
Operating temperature range -20/+100 °C			•		•**
Operating temperature range -20/+150 °C					•**
Relative pressure measurement	Application areas	•	•	•	•
Differential pressure measurement		•		•	•
Measurement of gases		•	•	•	•
Measurement of liquids				•	•
Crystallising media				•*	•*
Thermal engineering/pneumatics		•	•	•	•
Process engineering		•	•	•	•
Housing filling (glycerine, paraffin)	Options/extra equipment		•**	•	•
Safety version					**Safety pressure gauges**
Electrical contacts				•**	•**
Overload safety 10 x FSD		•			
Back flange		•	•	•	•
Clamp fixing		•	•	•	•
3-hole fixing, panel mounting bezel		•	•	•	•
Damping screw		•	•	•	•
Reference pointer		•	•	•	•
Max. pointer		**≥ 250 mbar**	**≥ 250 mbar**	•	•
Special scale		•	•	•	•
Bezel for panel mounting				•	•
		Page 325	**Page 16**	**Page 321** **Page 21/32**	**Page 52/55**

*Only in connection with chemical seal.
**Depending on version.

10

			MF MFW	
Standard diaphragm pressure gauges	Stainless steel diaphragm pressure gauges, pressure gauges for chemical applications	Standard spring-diaphragm pressure gauges for differential pressure	Spring-diaphragm pressure gauges for chemical applications for differential pressure	Magnetic piston pressure gauges for differential pressure
				•
•	•	•	•	•
•	•			
•	•	•	•	
				•
•	•	(0/250 mbar, 6 bar)	(0/250 mbar, 25 bar**)	(0/0.25 bar, 0/10 bar)
•	•	± 2.5 % FS	± 2.5 % FS	± 3 % FS
		•	•	• (-20/+80 °C)
•	•			
•	•			
		•	•	•
•	•	•	•	•
•	•	•	•	•
•**	•**			
		•	•	•
•	•	•	•	•
•	•	•	•	•
•**	•**			
•	•		•**	•
•**	•**	Up to 25 bar at both sides		•**
		•	•**	
				•
		•	•	
•	•	•	•	•
•	•	•	•	•
•	•	•	•	•
Page 129	Page 120/127	Page 149	Page 151	Page 138

10

		DMU 600/20	DMU 01	DMU 02	DMU 02 Vario	DMU 03	DMU 04	DMU 05 P	DMU 07
Smallest measuring range		0/4 bar	0/1 bar	0/600 mbar	0/1 bar	0/100 mbar	0/100 mbar	0/100 mbar	0/40 mbar
Largest measuring range		0/40 bar	0/400 bar	0/2,000 bar	0/1,000 bar	0/600 bar	0/400 bar	0/600 bar	0/20 bar
4–20 mA / HART	Output	•/-	•/-	•/-	•/-	•/-	•/-	•/-	•/-
0–10 V	Output	•	•	•		•	•	•	•
≤ ± 1 % FSO	Accuracy	•							
≤ ± 0.5 % FSO	Accuracy		•	•					
≤ ± 0.35 % FSO	Accuracy				•	•	•		•
≤ ± 0.1 % FSO	Accuracy							•	
Stainless steel	Wetted parts			•	•				
Stainless steel, FKM	Wetted parts					•	•	•	
Stainless steel, ceramic (AL_2O_3), FKM	Wetted parts		•						•
Stainless steel, silicon, glass, silicone	Wetted parts	•							
Aluminium, silicon, glass, silicone, PUR	Wetted parts								
No pressure transmission liquid	Pressure transmission	•	•	•					•
Paraffin oil, FDA	Pressure transmission				•		•		
Silicone oil	Pressure transmission					•		•	
Connection thread	Process connection	•	•	•	•	•	•	•	•
Hygienic connections	Process connection				•		•		
Flanges	Process connection				•				
Submersible probes	Process connection								
ISO 4400 connector	Electrical connection	•	•	•	•	•	•	•	•
M12 x 1	Electrical connection	•	•	•	•	•	•	•	•
Fixed cable connection	Electrical connection	•	•	•		•	•	•	•
Cable gland	Electrical connection								•
Temperature of the medium ≥ 100 °C	Application area		•	•	•	•	•	•	•
Temperature of the medium > 100 °C	Application area	•							
Temperature of the medium > -25 °C	Application area	•	•				•	•	•
Temperature of the medium ≥ -25 °C	Application area			•	•	•			•
Measuring range spread	Evaluation				•				
Indication of measured values	Evaluation								
ATEX certificate	Evaluation			•		•	•	•	•
SIL assessment	Evaluation		•***			•	•		
Negative pressure (vacuum)	Application areas	•	•	•	•	•	•	•	•
Relative pressure measurement	Application areas	•	•	•	•	•	•	•	•
Absolute pressure measurement	Application areas	•	•			•	•	•	•
Differential pressure measurement	Application areas								
Measurement of water / waste water	Application areas	•	•	•	•	•	•	•	•
Measurement of oils	Application areas	•	•	•	•	•	•	•	•
Measurement of chemicals	Application areas			•	•				•
Measurement of food	Application areas				•		•		
Measurement of pharmaceuticals	Application areas				•		•		
Measurement of crystallising media	Application areas				•				•
Measurement of gases	Application areas	•	•	•	•	•	•	•	•
Measurement of liquids	Application areas	•	•	•	•	•	•	•	•
		P. 202	P. 204	P. 208	P. 210	P. 217	P. 221	P. 223	P. 227

* Depends on measuring range.
** Accuracy of mechanical local display.
*** Depends on version.

10

DMU 08	DMU 09	DMU 10 D	DMU 11 D	DMU 13	DMU 14	DMU 20 D	DMU 21 D	DIM 20	DIM 30
0/100 mbar	0/40 mbar	0/6 mbar	0/20 mbar	0/600 mbar	0/400 mbar	0/0.25 mbar	0/1 bar	0/1 bar	0/100 mbar
0/25 bar	0/10 bar	0/1 bar	0/16 bar	0/40 bar	0/600 bar	0/1,000 mbar	0/70 bar	0/700 bar	0/400 bar
•/-	•/-	•/-	•/-	•/-	•/•	•/-	•/-		
•		•	•			•			
		•*		•**			•		
			•			•		•*	
•	•			•					
					•				•
•			•	•	•		•		•
	•							•	
		•				•			
	•	•				•		•	
					•				
•			•	•	•		•		•
		•	•	•	•		•	•	•
				•	•				
				•	•				
•	•								
		•	•						
		•	•				•		
•	•	•							
				•	•	•			
		•	•				•	•	
•	•			•	•	•			•
•	•	•	•	•	•	•			
								•	•
			•		•		•		
				•	•	•	•		•
•	•				•				
•									
					•			•	•
•	•			•	•			•	•
					•				•
		•	•			•	•		
•	•		•	•	•		•	•	•
•	•		•	•	•		•	•	•
	•			•	•				
				•	•				
				•	•				
				•					
		•	•	•	•	•	•	•	•
•	•		•	•	•		•	•	•
P. 229	P. 233	P. 235	P. 237	P. 241	P. 243	P. 246	P. 249	P. 252	P. 254

10

Pressure gauges – Mechanical pressure measuring instruments with elastic measuring elements

Bourdon tube pressure gauges

The measuring element of a Bourdon tube pressure gauge is a C shaped or helical metal tube closed at one end. For pressure ranges up to a maximum of 60 bar, the tube has an oval cross section and the shape of a C. For higher pressure ranges, the tube is bent into the shape of a helix. The oval cross section is obtained during bending. When pressure is applied, both types of bent tubes try to regain their original shapes, the straight tube. In this process, the radius increases and this displacement is converted into a circular movement by the movement. Bourdon tube pressure gauges are suitable for a wide variety of applications in measuring liquids and gases; they are the most commonly used pressure gauges. They are used for pressure measurements from 600 mbar up to several 1,000 bar.

Capsule pressure gauges

Capsule pressure gauges are used in gas technology applications for low pressure ranges. Two concentrically shaped diaphragms are connected at the outer edges by means of welding or soldering. One diaphragm has an opening in the centre through which the gas to be measured can flow in. The pressure in the capsule causes it to arch to the outside. A deflection lever at the opposite side of the inlet opening transmits the linear displacement to a movement and converts it into a rotary movement. As early as in the 1920s, AFRISO patented this system as the "fine pressure gauge".
Capsule pressure gauges are exclusively used for dry and clean gases at measuring ranges from 6 mbar to 1,000 mbar.

Diaphragm pressure gauges

Diaphragm pressure gauges use a concentrically shaped diaphragm which is directly connected to the process connection. The pressure is applied to the process side of the diaphragm. A rod at the opposite side which is fitted with a movement converts the displacement of the diaphragm into a rotary movement. Diaphragm pressure gauges are used for gaseous and liquid media within the range from 10 mbar to 25 bar; the media can even be viscous or crystallising if the process connection opening (open flange) is sufficiently large.
With a flush welded diaphragm, they are ideal for measurements in hygienic processes.

Spring-diaphragm pressure gauges

Spring-diaphragm pressure gauges are ideal for measuring low differential pressures at high static pressures. The pressures act on two pressure chambers separated by an elastic diaphragm. If there are different pressures in the chambers, the diaphragm is axially displaced against a compression spring. This displacement is transmitted to a movement by a rod and converted into a rotary movement. The differential pressure is directly indicated by a pointer. The diaphragm is held by a metallic support which results in an overpressure safety of up to 25 bar at both sides. Diaphragm pressure gauges are used for liquids that are not highly viscous and for differential pressure from 250 mbar to 25 bar.

Magnetic piston and magnetic diaphragm pressure gauges

Magnetic piston type pressure gauges and magnetic diaphragm pressure gauges are primarily used for measuring differential pressure at filters which are subject to high static pressures. The pressures act on two pressure chambers separated by a diaphragm and/or a piston. If there are different pressures in the chambers, a rod with a permanent magnet is axially displaced against a compression spring. The permanent magnet transmits this displacement to the pointer by means of a ring magnet mounted to the pointer hub. The pointer indicates the pressure difference. Magnetic piston pressure gauges and magnetic diaphragm pressure gauges are used for the measurement of differential pressure of gases from 2.5 mbar to 10 bar; a static pressure of up to 350 bar is permissible.

Bourdon tube pressure gauges for boiler and heating system applications

- **Design as per EN 837-1**
- **Corrosion-resistant, highly impact-resistant plastic housing**
- **Many customised versions available**

Version: Plastic connection

Application

For gaseous and liquid media which are not highly viscous, do not crystallise and do not attack copper alloys and plastic. For measuring gas or vapour, these gauges must be used in accordance with the table "Selection Criteria as per EN 837-2" (see appendix)!

Technical specifications

Type
D 1

Nominal size
26 – 28

Accuracy class (EN 837-1/6)
4.0

Range (EN 837-1/5)
0/4 bar

Application area
Static load: ¾ x full scale value
Dynamic load: 2/3 x full scale value
Short-term: full scale value

Operating temperature range
Medium: T_{max} = +60 °C
Ambient: T_{min} = -20 °C
T_{max} = +60 °C

Temperature performance
Indication error when the temperature of the measuring system deviates from the normal temperature of 20 °C:
Rising temperature approx. ± 0.4 %/10 K
Falling temperature approx. ± 0.4 %/10 K
of full scale value

Degree of protection
IP 32 (EN 60529)

10

Standard version

Connection
Back
Plastic, integrated in housing:
RF 26 = G⅛B
RF 28 = M 10 x 1
Brass: G⅛B, M 10 x 1

Measuring element
Bourdon tube, copper alloy
"C" type tube

Movement
Brass

Dial
Plastic (ABS), white
Dial marking black

Pointer
Plastic, black

Housing
RF 26 = Plastic (PA6), black
RF 28 = Plastic (PA6), white, back flange

Window
Clip-in plastic

Options

- Special scales
- Reference pointer
- Other brass connection

DG: G, PG: 4	**Price €**
RF 26, plastic connection G⅛B	
RF 26, brass connection G⅛B	
RF 28, plastic connection M10 x 1	
RF 28, brass connection M10 x 1	

Minimum order quantity = 100 pieces per delivery

Bourdon tube pressure gauges for boiler and heating system applications Type D 1 – RF 26/28

Housing types and dimensions (mm)

RF 26 plastic connection, integrated in housing

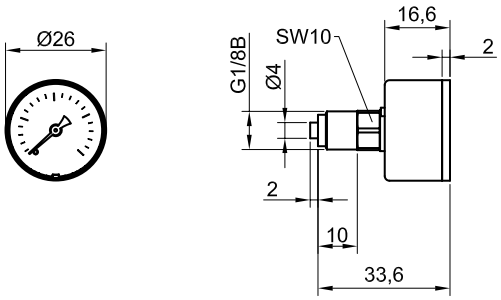

RF 26 Brass connection

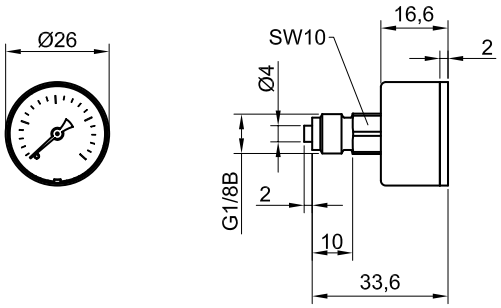

RF 28 plastic connection, integrated in housing

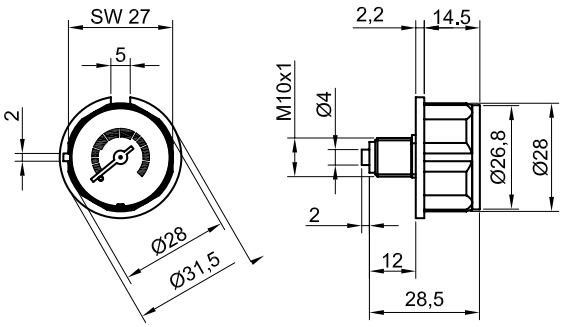

RF 28 Brass connection

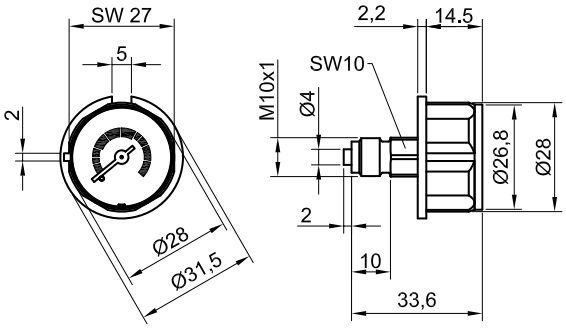

10

Bourdon tube pressure gauges for heating/plumbing applications

- **With self-sealing connection thread (NG 50 and 63) for fast mounting**
- **Red maximum mark on dial (version HZ)**
- **Adjustable red reference pointer and green operation segment on window (version HZ)**
- **Corrosion-resistant housing**

Page 327

Mounting valves
with self-sealing coating, automatically close during replacement of gauge to enable fast and cost-effective servicing (see "Accessories for pressure gauges")

Application

For gaseous and liquid media which are not highly viscous, do not crystallise and do not attack copper alloys and EPDM.
! For measuring gas or vapour, these gauges must be used in accordance with the table "Selection Criteria as per EN 837-2" (see appendix)!

Technical specifications

Nominal size
50 – 63 – 80 – 100

Accuracy class (EN 837-1/6)
2.5

Ranges (EN 837-1/5)
-1/0 bar
0/0.6 to 0/25 bar

Application area
Static load: ¾ x full scale value
Dynamic load: ⅔ x full scale value
Short-term: full scale value

Operating temperature range
Medium: T_{max} = +60 °C
Ambient: T_{min} = -20 °C
T_{max} = +60 °C

Temperature performance
Indication error when the temperature of the measuring system deviates from the normal temperature of 20 °C:
rising temperature approx. ±0.4 %/10 K
falling temperature approx. ±0.4 %/10 K
of full scale value

Degree of protection
IP 32 (EN 60529)

10

Standard version

Connection
NG 50-63 G¼B: Self-sealing thread with PTFE ring for safe and fast installation
(Attention: 60° chamfer required at female thread!)
Brass, bottom or centre back
NG 50-63 G¼B – spanner size SW 14
NG 80-100 G½B – spanner size SW 22

Measuring element
Bourdon tube, copper alloy; "C" type tube

Movement
Brass

Dial
Plastic, white
Dial marking black

Pointer
Plastic, black

Housing
Plastic (ABS), black, highly impact-resistant and corrosion-resistant

Window
Clip-in plastic NG 80-100 with adjustable red reference pointer

Special versions

Pressure gauges for heating installations NG 50-63-80
For sealed heating systems
Range: 0/4 bar
Connection: NG 50 G¼B bottom back
NG 63 G¼B or G⅜B bottom or centre back
NG 80 G½B bottom or G¼B centre back
(with valve G¼ x G½)
Dial with red mark at 2.5 or 3 bar and green sector from 1.5 to 2.5 or 3 bar, window with adjustable red reference pointer and green flag

Hydrometer NG 80–100
Water level indicator for open heating systems
Ranges: 0/0.6 to 0/10 bar
Connection: Brass G½B bottom – SW 22
Dual scale: bar outer scale black
metres water column inner scale black
Window with adjustable reference pointer

i

See page 309 for prices.

Bourdon tube pressure gauges for heating/ plumbing applications

Housing types and dimensions

HZ 50 – bottom back connection

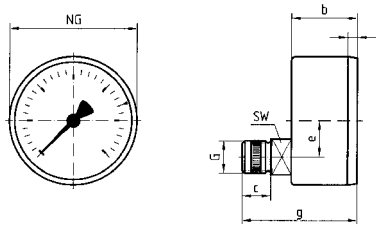

RF/HZ 63 – bottom connection

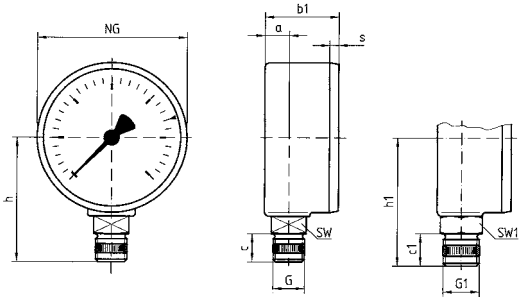

RF/HZ 63 – centre back connection

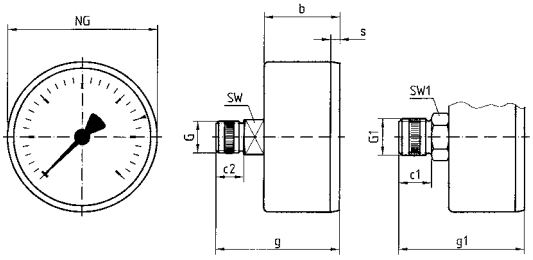

RF 80/HY 80/HZ 80 – bottom connection

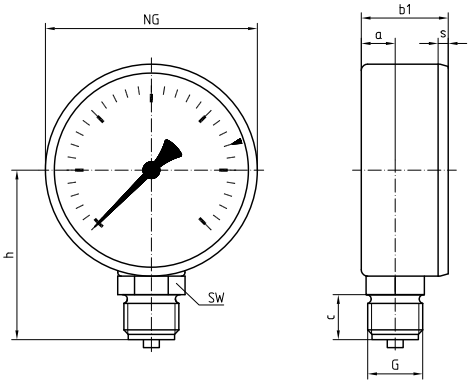

HZ 80 – centre back connection

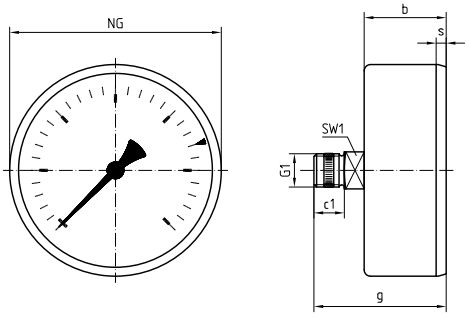

RF 100/HY 100 – bottom connection

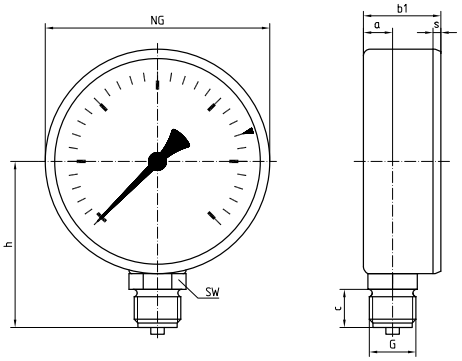

10

Dimensions (mm)

Nominal size (NG)	a	b	b_1	c	c_1	c_2	e	g	g_1	G	G_1	h	h_1	s	SW	Spanner size SW_1
50	-	25.8	-	11.2	-	-	14	43	-	G¼B	-	-	-	3.8	14	-
63	9.8	30.4	29.7	11.2	13	11.5	-	49.9	50.4	G¼B	G⅜B	49.5	51.5	3.7	14	17
80	12.8	31	32.8	17	11.5	-	-	50	-	G½B	G¼B	64	-	2.8	22	14
100	15.5	-	34.5	17	-	-	-	-	-	G½B	-	74	-	3.5	22	-

Bourdon tube pressure gauges for heating/ plumbing applications

DG: G, PG: 2

Type	RF 50 rad	RF 50 ax	RF 63 rad	RF 63 ax	RF 80 rad	HY 80 rad*	RF 100 rad	HY 100 rad*
Version	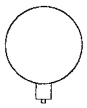		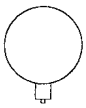		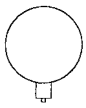	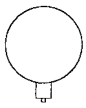	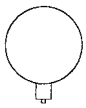	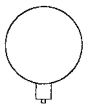
Housing Ø	50	50	63	63	80	80	100	100
Housing	Plastic (ABS), black, highly impact-resistant and corrosion-resistant							
Measuring element	Bourdon tube, copper alloy							
Accuracy class	2.5	2.5	2.5	2.5	2.5	2.5	2.5	2.5
Connection	G¼B	G¼B	G¼B	G¼B	G½B	G½B	G½B	G½B
Thread	self-sealing with PTFE sealing ring				-			
					With adjustable red reference pointer			
Range (bar)	Part no.	Part no.	Part no.	Part no.	Part no.	Part no.	Part no.	Part no.
Price €								
-1/0	-	-	**63501**	-	**63551**	-	**63601**	-
0/0.6	-	-	-	-	-	-	-	**63281**
0/1	-	-	-	-	**63559**	63570	**63609**	**63282**
0/1.6	-	-	-	-	63560	63571	**63610**	**63283**
0/2.5	-	-	**63511**	**63536**	**63561**	-	**63611**	**63284**
0/4	-	-	**63512**	**63537**	**63562**	-	**63612**	**63285**
0/6	**63122**	**63127**	**63513**	**63538**	**63563**	**63574**	**63613**	**63286**
0/10	**63123**	**63128**	**63514**	**63539**	**63564**	**63575**	**63614**	**63287**
0/16	**63124**	**63129**	**63515**	**63540**	**63565**	-	**63615**	-
0/25	-	-	-	-	**63566**	-	**63616**	-

Type	HZ 50 ax	HZ 63 rad	HZ 63 ax	HZ 63 rad	HZ 63 ax	HZ 80 rad	HZ 80 rad	HZ 80 ax
Version		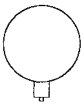		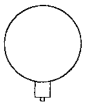		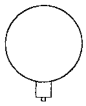	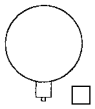	
Housing Ø	50	63	63	63	63	80	80	80
Housing	Plastic (ABS), black, highly impact-resistant and corrosion-resistant							
Measuring element	Bourdon tube, copper alloy							
Range	0/4 bar							
Dial	With red mark at 3 bar and green sector from 1.5 to 3 bar							
Window	Plastic with adjustable red reference pointer and green flag							
Accuracy class	2.5	2.5	2.5	2.5	2.5	2.5	2.5	2.5
Connection	G¼B	G⅜B	G⅜B	G¼B	G¼B	G½B	G¼ with valve G¼ x G½	G¼ with valve G¼ x G½
Thread	Self-sealing with PTFE sealing ring					-	Self-sealing with PTFE sealing ring	
Range (bar)	Part no.	Part no.	Part no.	Part no.	Part no.	Part no.	Part no.	Part no.
Price €								
Part no.	**63927**	**63910**	**63914**	**63911**	**63915**	**63918**	**63913**	**63919**
Dial	With red mark at 2.5 bar and green sector from 1.5 to 2.5 bar							
Price €								
Part no.	-	**63908**	**63909**	-	-	-	-	-

* Dual scale bar/mWC

Pressure gauges with capillary tube

For burners, boiler, hot water tanks and air conditioning/refrigeration systems, AFRISO offers different pressure and temperature measuring instruments with various housing versions and connection types. The portfolio covers cost-effective pressure gauges and thermometers with plastic or copper capillary as well as combination instruments such as combined thermometer/pressure gauges. We also provide OEM versions for your specific applications. Please enquire.

Application examples

10

i
See page 342 for thermo-meters with capillary tube.

Pressure gauges with plastic capillary tube

- **Ideal for boilers and burners, especially for wall-mounted boilers**
- **Corrosion-resistant, highly impact-resistant plastic housing**
- **Many customised versions available**

Application

For gaseous and liquid media which are not highly viscous, do not crystallise and do not attack copper alloys and plastic.
For measuring gas or vapour, these gauges must be used in accordance with the table "Selection Criteria as per EN 837-2" (see appendix)!

Technical specifications

Type
D 1

Nominal size
26 – 28 – 37 – 40 – 42 – 52 – 45 x 45

Accuracy class (EN 837-1/6)
4.0

Ranges (EN 837-1/5)
0/4 bar
0/6 bar

Application area
Static load: ¾ x full scale value
Dynamic load: 2/3 x full scale value
Short-term: full scale value

Operating temperature range
Medium: T_{max} = +80 °C
Ambient: T_{min} = -20 °C
T_{max} = +70 °C

Temperature performance
Indication error when the temperature of the measuring system deviates from the normal temperature of 20 °C:
Rising temperature approx. ± 0.4 %/10 K
Falling temperature approx. ± 0.4 %/10 K
of full scale value

Degree of protection
IP 32 (EN 60529)

Standard version

Connection
Back, with plastic capillary
Brass disk G¼B

Measuring element
Bourdon tube, copper alloy
"C" type tube

Movement
Brass

Dial
Plastic (ABS), white or black
Dial marking black

Pointer
Plastic, black or white

Housing
Plastic (ABS), white, black or grey
Highly impact-resistant and corrosion-resistant
RFK 26, RFK 28 = Plastic (PA6)
glass-fibre reinforced

Window
Clip-in plastic, transparent
RFK 52 with bezel

Capillary length
Plastic capillary, R3, black
L = 500, 1,000, 1,500, 2,000 mm

Options

- Window with reference pointer (RFK 28, 37, 45, 52)
- Special scale
- Dial with customer logo
- Other process connections
- Various capillary lengths
- Special colours for housing, dial, pointer

See page 314 for prices.

Pressure gauges with plastic capillary tube

Dimensions (in mm)

Type RFK 26

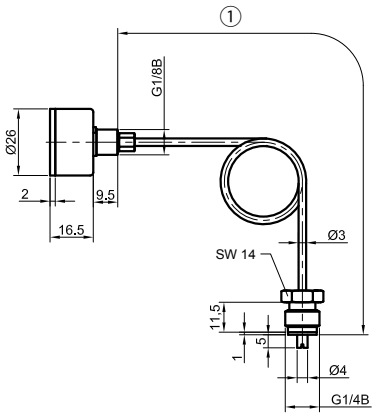

① Capillary length

Type RFK 28

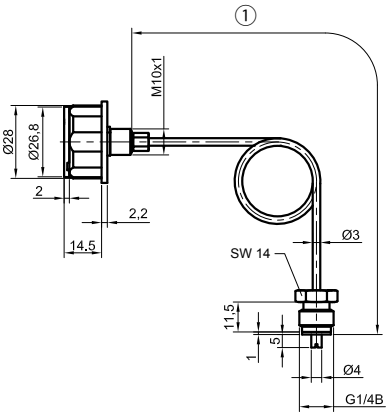

① Capillary length

10

Type RFK 37

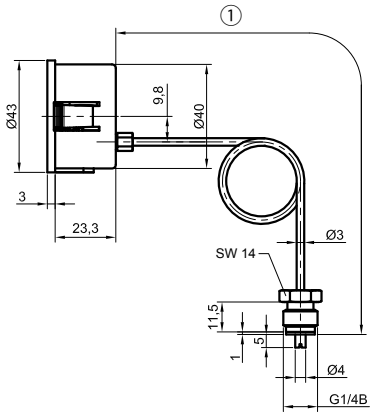

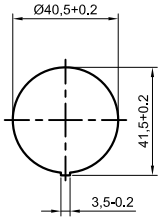

① Capillary length

Type RFK 40

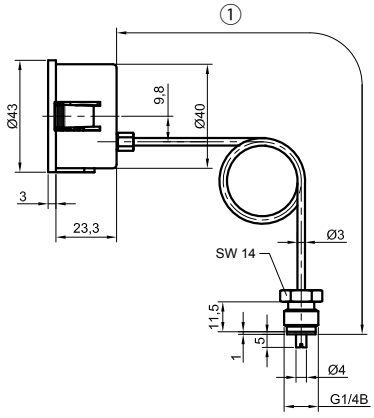

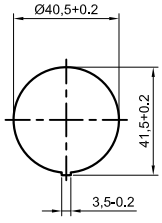

① Capillary length

Pressure gauges with plastic capillary tube

Dimensions (in mm)

Type RFK 42

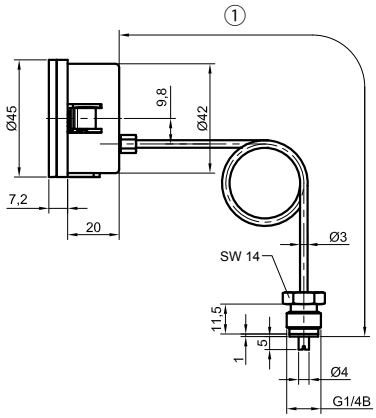

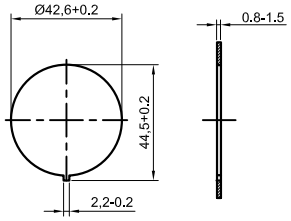

① Capillary length

Type RFK 45

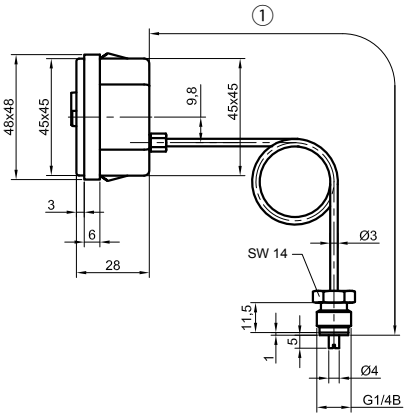

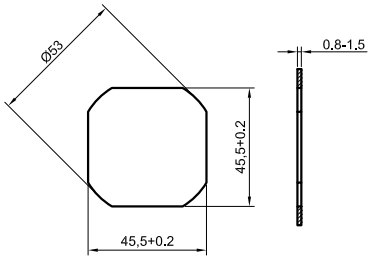

① Capillary length

Type RFK 52

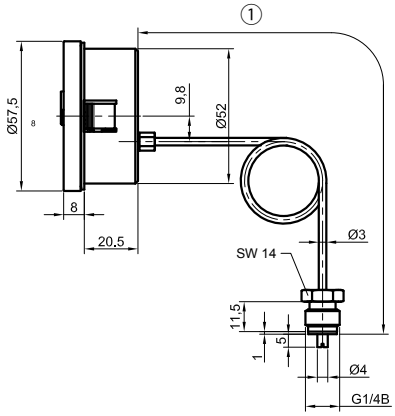

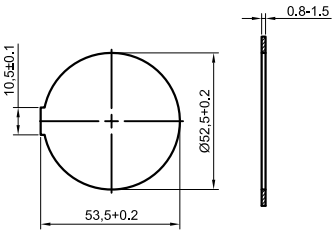

① Capillary length

10

Pressure gauges with plastic capillary tube

DG: G, PG: 2

Type	RFK 26	RFK 28	RFK 37	RFK 40
Version				
Housing Ø	26	28	37	40
Housing	Plastic (PA6), black	Plastic (PA6), white	Plastic (ABS), white	
Pointer	Plastic, black			
Dial/scale	Dial white / scale black			
Packing unit**	72 pieces			
Range	0/4 bar	0/4 bar	0/4 bar	0/4 bar
Capillary length*	**Price €** Part no.	**Price €** Part no.	**Price €** Part no.	**Price €** Part no.
500 mm				
1,000 mm				
1,500 mm				
2,000 mm				
Range	---	---	0/6 bar	0/6 bar
Capillary length*	**Price €** Part no.	**Price €** Part no.	**Price €** Part no.	**Price €** Part no.
500 mm	---	---		
1,000 mm	---	---		
1,500 mm	---	---		
2,000 mm	---	---		

* Other capillary lengths on request.
** Minimum order quantity for non-stock items = 144 pieces per delivery.

Pressure gauges with plastic capillary tube

DG: G, PG: 2

Type	RFK 42	RFK 45	RFK 52
Version			
Housing Ø	42	45 x 45	52
Housing	Plastic (ABS), white	Plastic (ABS), black	Plastic (ABS), grey, with bezel, black
Pointer	Plastic, black	Plastic, white	
Dial/scale	Dial white / scale black	Dial white / scale black	
Packing unit**	72 pieces	72 pieces	50 pieces
Range	0/4 bar	0/4 bar	0/4 bar
Capillary length*	**Price €** Part no.	**Price €** Part no.	**Price €** Part no.
500 mm			
1,000 mm			
1,500 mm			
2,000 mm			
Range	0/6 bar	0/6 bar	0/6 bar
Capillary length*	**Price €** Part no.	**Price €** Part no.	**Price €** Part no.
500 mm			
1,000 mm			
1,500 mm			
2,000 mm			

* Other capillary lengths on request.
** Minimum order quantity = 2 packing units.

Pressure gauges with copper capillary tube

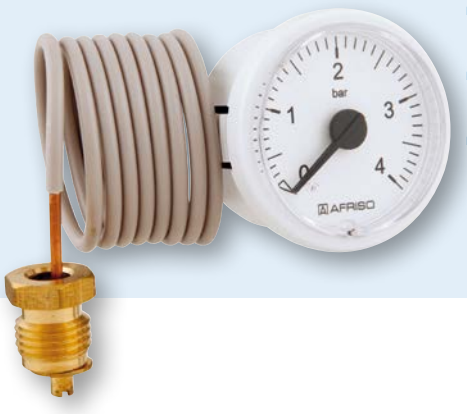

- **Ideal for boilers and burners, especially for wall-mounted boilers**
- **Corrosion-resistant, highly impact-resistant plastic housing**
- **Many customised versions available**

Application

For gaseous and liquid media which are not highly viscous, do not crystallise and do not attack copper alloys and plastic.
For measuring gas or vapour, these gauges must be used in accordance with the table "Selection Criteria as per EN 837-2" (see appendix)!

Technical specifications

Type
D 1

Nominal size
26 – 28 – 37 – 40 – 42 – 52 – 45 x 45

Accuracy class (EN 837-1/6)
4.0

Ranges (EN 837-1/5)
0/4 bar
0/6 bar

Application area
Static load: ¾ x full scale value
Dynamic load: 2/3 x full scale value
Short-term: full scale value

Operating temperature range
Medium: T_{max} = +80 °C
Ambient: T_{min} = -20 °C
T_{max} = +70 °C

Temperature performance
Indication error when the temperature of the measuring system deviates from the normal temperature of 20 °C:
Rising temperature approx. ± 0.4 %/10 K
Falling temperature approx. ± 0.4 %/10 K of full scale value

Degree of protection
IP 32 (EN 60529)

Standard version

Connection
Back, with copper capillary
Brass disk G¼B

Measuring element
Bourdon tube, copper alloy
"C" type tube

Movement
Brass

Dial
Plastic (ABS), white or black
Dial marking black

Pointer
Plastic, black or white

Housing
Plastic (ABS), white, black or grey
Highly impact-resistant and corrosion-resistant
RFK 26, RFK 28 = Plastic (PA6)
glass-fibre reinforced

Window
Clip-in plastic, transparent
RFK 52 with bezel

Capillary length
Cu capillary with PVC coating, R3, gray
L = 500, 1,000, 1,500, 2,000 mm

Options

- Window with reference pointer (RFK 28, 37, 45, 52)
- Special scales
- Dial with customer logo
- Other process connections
- Various capillary lengths
- Special colours for housing, dial, pointer

i
See page 311 for prices.

Pressure gauges with copper capillary tube

Dimensions (in mm)

Type RFK 26

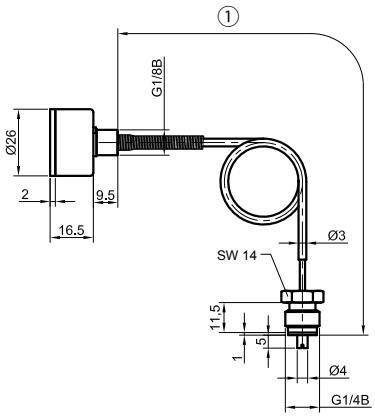

① Capillary length

Type RFK 28

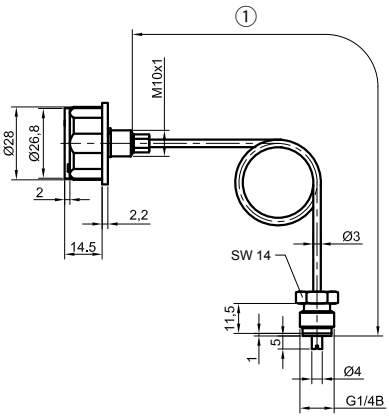

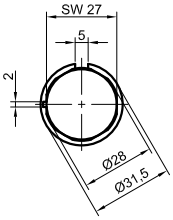

① Capillary length

Type RFK 37

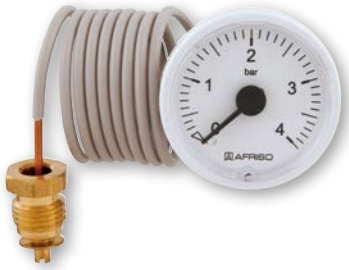

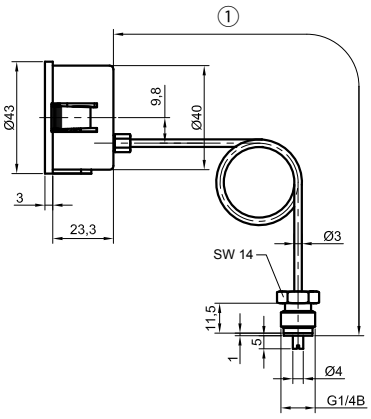

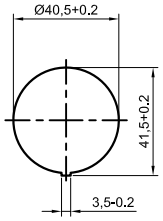

① Capillary length

Type RFK 40

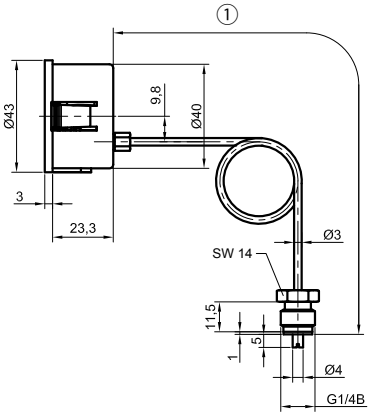

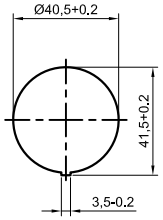

① Capillary length

Pressure gauges with copper capillary tube

Dimensions (in mm)

Type RFK 42

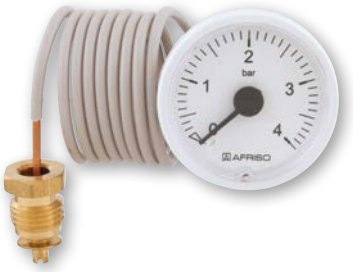

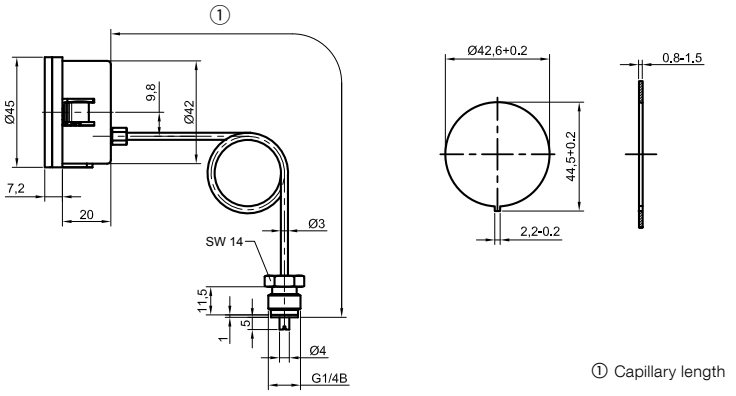

① Capillary length

Type RFK 45

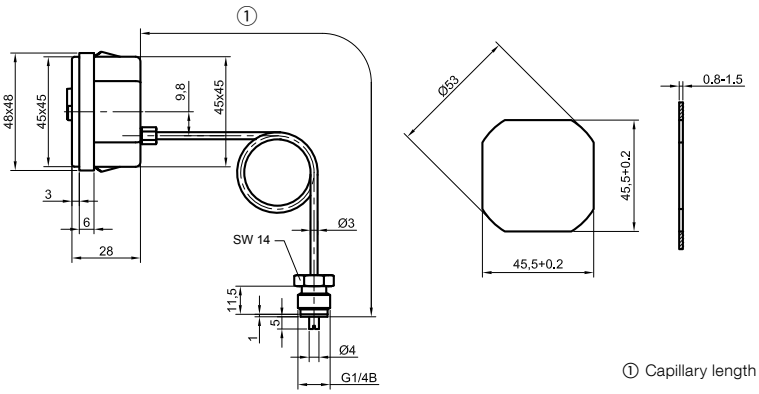

① Capillary length

10

Type RFK 52

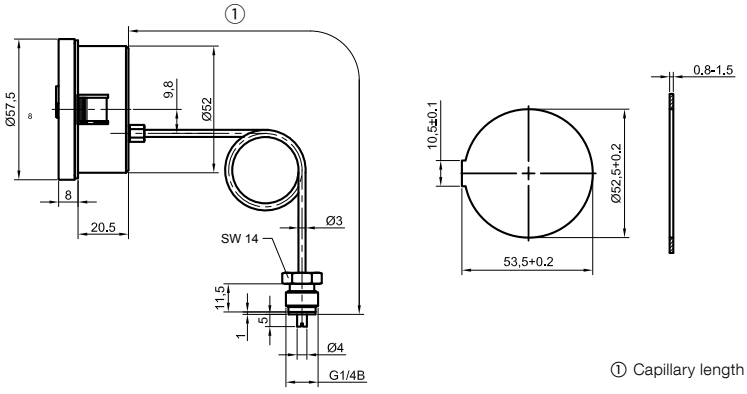

① Capillary length

Pressure gauges with copper capillary tube

DG: G, PG: 2

Type	RFK 26	RFK 28	RFK 37	RFK 40
Version				
Housing Ø	26	28	37	40
Housing	Plastic (PA6), black	Plastic (PA6), white	Plastic (ABS), white	
Pointer	Plastic, black			
Dial/scale	Dial white / scale black			
Packing unit**	50 pieces			
Range	0/4 bar	0/4 bar	0/4 bar	0/4 bar
Capillary length*	**Price €** Part no.	**Price €** Part no.	**Price €** Part no.	**Price €** Part no.
500 mm				
1,000 mm				
1,500 mm				
2,000 mm				
Range	---	---	0/6 bar	0/6 bar
Capillary length*	**Price €** Part no.	**Price €** Part no.	**Price €** Part no.	**Price €** Part no.
500 mm	---	---		
1,000 mm	---	---		
1,500 mm	---	---		
2,000 mm	---	---		

* Other capillary lengths on request.
** Minimum order quantity = 100 pieces per delivery.

Pressure gauges with copper capillary tube

DG: G, PG: 2

Type	RFK 42	RFK 45	RFK 52
Version			
Housing Ø	42	45 x 45	52
Housing	Plastic (ABS), white	Plastic (ABS), black	Plastic (ABS), grey, with bezel, black
Pointer	Plastic, black	Plastic, white	
Dial/scale	Dial white / scale black	Dial white / scale black	
Packing unit**	72 pieces	72 pieces	50 pieces
Range	0/4 bar	0/4 bar	0/4 bar
Capillary length*	**Price €** Part no.	**Price €** Part no.	**Price €** Part no.
500 mm			
1,000 mm			
1,500 mm			
2,000 mm			
Range	0/6 bar	0/6 bar	0/6 bar
Capillary length*	**Price €** Part no.	**Price €** Part no.	**Price €** Part no.
500 mm			
1,000 mm			
1,500 mm			
2,000 mm			
Range	---	---	0/10 bar
Capillary length*	**Price €** Part no.	**Price €** Part no.	**Price €** Part no.
500 mm	---	---	
1,000 mm	---	---	
1,500 mm	---	---	
2,000 mm	---	---	

* Other capillary lengths on request.
** Minimum order quantity = 2 packing units.

Bourdon tube pressure gauges for industrial applications EN 837-1

- For machine and plant engineering
- Robust, stainless steel housing with bayonet bezel
- Optionally available up to nominal size 250 mm
- Can be equipped with electrical contact
- DNV-GL GOSSTANDART-certified

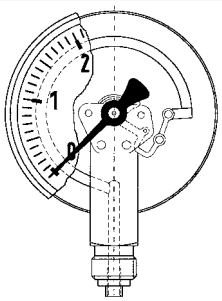

Application

For gaseous and liquid media which are not highly viscous, do not crystallise and do not attack copper alloys. For high accuracy and rough application conditions.
! For measuring gas or vapour, these gauges must be used in accordance with the table "Selection Criteria as per EN 837-2" (see appendix)!

Technical specifications

Type
D 4

Nominal size
100 – 160

Accuracy class (EN 837-1/6)
1.0

Ranges (EN 837-1/5)
-1/0 to -1/+15 bar
0/0.6 to 0/1000 bar

Application area
Static load:
≤ 600 bar = full scale value
> 600 bar = ¾ x full scale value
Dynamic load:
≤ 600 bar = 0.9 x full scale value
> 600 bar = ⅔ x full scale value
Short-term:
≤ 600 bar = 1.3 x full scale value
> 600 bar = full scale value

Operating temperature range
Medium: T_{max} = +60 °C
Ambient: T_{min} = -20 °C
T_{max} = +60 °C

Temperature performance
Indication error when the temperature of the measuring system deviates from the normal temperature of 20 °C:
rising temperature approx. ±0.4 %/10 K
falling temperature approx. ±0.4 %/10 K
of full scale value

Degree of protection
IP 54 (EN 60529)

Standard version

Connection
Brass, bottom or bottom back
G½B – spanner size SW 22 (EN 837-1/7.3)

Measuring element
Bourdon tube, ≤ 60 bar "C" type tube, copper alloy > 60 bar helical tube, stainless steel 316 Ti/316 L

Movement
Brass

Dial
Aluminium, white; dial marking black

Pointer
Aluminium, black

Housing
Stainless steel 304
with blow-out

Bayonet type bezel
Stainless steel 304

Window
Instrument glass

Options

- Nominal size 250 (bottom connection)
- Back flange
- Panel mounting bezel
- 3-hole fixing, panel mounting bezel
- Laminated safety glass window
- Damping screw
- Reference pointer
- Electrical contacts
- Special scales
- Other process connections

See page 323 for prices.

Bourdon tube pressure gauges for industrial applications

Type D 4 – NG 100/160

Housing types and dimensions

Bottom connection

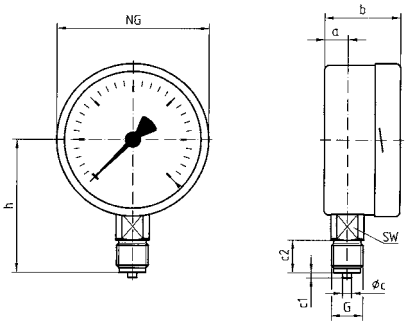

Bottom connection, back flange

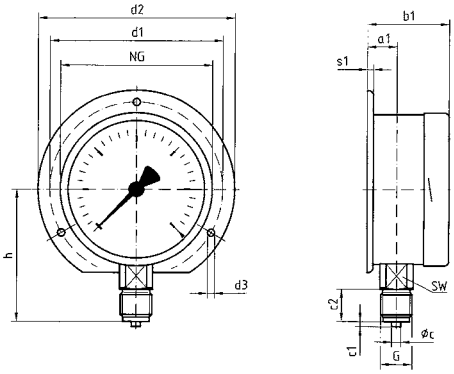

Centre back connection

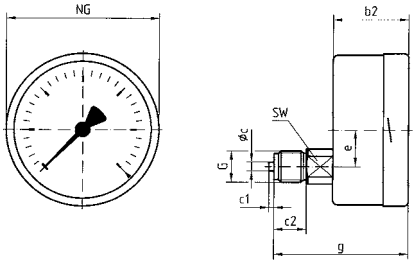

Centre back connection, 3-hole fixing, panel mounting bezel

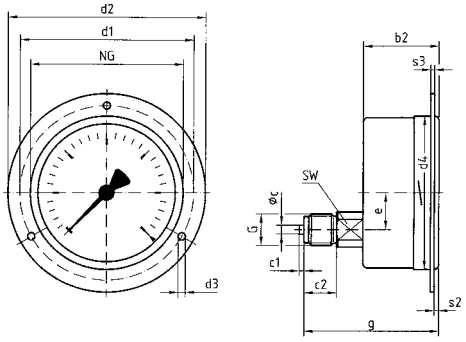

Centre back connection, panel mounting bezel with clamp fixing

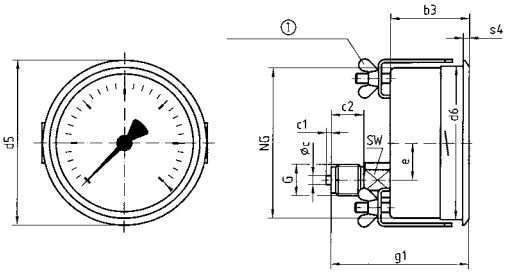

① 90° drawn staggered

Dimensions (mm)

Nominal size (NG)	a	a1	b	b1	b2	b3	Øc	c1	c2	d1*	d2	d3*	d4	d5	d6	e	G	g	g1	h	s1
100	15.6	19.1	49	52.5	49	49	6	3	20	116	132	4.8	104	107	101	26.5	G½B	81	81	86	5.5
160	17.5	20.5	50	53	50	52	6	3	20	178	196	5.8	164	167	161	26.5	G½B	82	84	116	6
250	16	-	57	59	-	-	6	3	20	270	285	5.8	-	-	-	-	G½B	-	-	165	2

Nominal size (NG)	s2	s3	s4	SW
100	4	2	4	22
160	4	2	4.5	22
250	-	-	-	22

* Dimensions for NG 100 according to DIN 16064.

Bourdon tube pressure gauges for industrial applications EN 837-1

DG: M, PG: 2

Type	RF100 I, D401	RF100 I, D411	RF100 I, D431	RF100 I, D451	RF160 I, D401	RF160 I, D411	RF160 I, D431	RF160 I, D451
Version	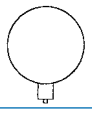		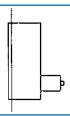		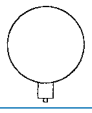		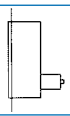	
Housing Ø	100	100	100	100	160	160	160	160
Housing	Stainless steel 304 with bayonet bezel, instrument glass window							
Measuring element	Bourdon tube, copper alloy (> 60 bar stainless steel 316 Ti/316 L)							
Accuracy class	1.0	1.0	1.0	1.0	1.0	1.0	1.0	1.0
Connection	G½B	G½B	G½B	G½B	G½B	G½B	G½B	G½B
			3-hole fixing, panel mounting bezel, 304, polished	Panel mounting bezel, 304, polished, with clamp fixing			3-hole fixing, panel mounting bezel, 304, polished	Panel mounting bezel, 304, polished, with clamp fixing
Range (bar)	Part no.	Part no.	Part no.	Part no.	Part no.	Part no.	Part no.	Part no.
Price €								
-1/0	**85301401**	85301411	85301431	85301451	85351401	85351411	85351431	85351451
-1/+0.6	85302401	85302411	85302431	85302451	85352401	85352411	85352431	85352451
-1/+1.5	**85303401**	85303411	85303431	85303451	85353401	85353411	85353431	85353451
-1/+3	**85304401**	85304411	85304431	85304451	85354401	85354411	85354431	85354451
-1/+5	**85305401**	85305411	85305431	85305451	85355401	85355411	85355431	85355451
-1/+9	85306401	85306411	85306431	85306451	85356401	85356411	85356431	85356451
-1/+15	85307401	85307411	85307431	85307451	85357401	85357411	85357431	85357451
Price €								
0/0.6	85309401	85309411	85309431	85309451	85359401	85359411	85359431	85359451
0/1	**85310401**	85310411	85310431	85310451	**85360401**	85360411	85360431	85360451
0/1.6	**85311401**	85311411	85311431	85311451	**85361401**	85361411	85361431	85361451
0/2.5	**85312401**	85312411	85312431	85312451	**85362401**	85362411	85362431	85362451
0/4	**85313401**	85313411	85313431	85313451	**85363401**	85363411	85363431	85363451
0/6	**85314401**	85314411	85314431	85314451	**85364401**	85364411	85364431	85364451
0/10	**85315401**	85315411	85315431	85315451	**85365401**	85365411	85365431	85365451
0/16	**85316401**	85316411	85316431	85316451	**85366401**	85366411	85366431	85366451
0/25	**85317401**	85317411	85317431	85317451	**85367401**	85367411	85367431	85367451
0/40	**85318401**	85318411	85318431	85318451	85368401	85368411	85368431	85368451
Price €								
0/60	**85319401**	85319411	85319431	85319451	85369401	85369411	85369431	85369451
0/100	**85320401**	85320411	85320431	85320451	85370401	85370411	85370431	85370451
0/160	**85321401**	85321411	85321431	85321451	85371401	85371411	85371431	85371451
0/250	**85322401**	85322411	85322431	85322451	85372401	85372411	85372431	85372451
0/400	**85323401**	85323411	85323431	85323451	85373401	85373411	85373431	85373451
Price €								
0/600	85324401	85324411	85324431	85324451	85374401	85374411	85374431	85374451
0/1,000	85325401	85325411	85325431	85325451	85375401	85375411	85375431	85375451
Extra charge €								
Nominal size 250	---	---	---	---		---	---	---

Minimum order quantity for non-stock items = 10 pieces.

Blue part no. = in-stock items

10

Standard Bourdon tube pressure gauges for differential pressure

- Indication of plus pressure, minus pressure and differential pressure
- Excellent price/performance ratio
- Two independent Bourdon tube systems
- Housing and wetted parts also available in stainless steel (option)

A
Page 327

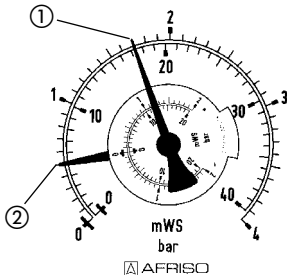

Reading example
Δp (differential pressure)
① p1 (+connection)
② p2 (-connection)

Application

For differential pressure measurement of gaseous and liquid media which are not highly viscous, do not crystallize and do not attack copper alloys. Specially suitable for heating systems (supply and return pipes).
! For measuring gas or vapour, these gauges must be used in accordance with the table "Selection Criteria as per EN 837-2" (see appendix)!

Technical specifications

Type
D 2

Nominal size
100

Function
The pressures are measured in two independent Bourdon tube systems ("plus" pressure = high pressure, "minus" pressure = low pressure). The pressure is indicated by means of a dial and a pointer. The differential pressure scale covers 50 % of the range of the "plus" pressure and 50 % of the range of the "minus" pressure. The black pointer ("plus" connection) and the red pointer ("minus" connection) at the differential pressure gauge scale allow you to read the pressures in both systems on the fixed scale.

Accuracy class (EN 837-1/6)
1.6

Ranges (EN 837-1/5)
0/0.6 to 0/60 bar

Application area
The maximum pressure in the system must not exceed the full scale value. For good readability, the differential pressure to be measured should not be less than approx. 20 % of the full scale value.

Operating temperature range
Medium: T_{max} = +60 °C
Ambient: T_{min} = -20 °C
T_{max} = +60 °C

Temperature performance
Indication error when the temperature of the measuring system deviates from the normal temperature of 20 °C:
rising temperature approx. ±0.4 %/10 K
falling temperature approx. ±0.4 %/10 K
of full scale value

Degree of protection
IP 32 (EN 60529)

Connection
Brass, bottom; parallel in line
2 x G½B – spanner size SW 22 (EN 837-1/7.3)
Optional: Wetted parts stainless steel

Measuring element
Bourdon tube, "C" type tube, copper alloy

Movement
Brass

Dial
Aluminium, white
Dial marking black (bar/mWC)

Pointer/dial
Aluminium

Housing
Sheet steel, black

Push on bezel
Sheet steel, black

Window
Instrument glass

DG: M, PG: 2	Part no.	Prices €
RF 100 Dif D 201, 0/1 bar	85610201	
RF 100 Dif D 201, 0/1.6 bar	85611201	
RF 100 Dif D 201, 0/2.5 bar	85612201	
RF 100 Dif D 201, 0/4 bar	85613201	
RF 100 Dif D 201, 0/6 bar	85614201	
RF 100 Dif D 201, 0/10 bar	85615201	
RF 100 Dif D 201, 0/16 bar	85616201	

i See the catalogue INDUSTRIAL TECHNOLOGY for other versions.

Standard capsule pressure gauges

EN 837-3

- **Housing: Sheet steel or stainless steel version**
- **With zero correction**
- **Ideal for low pressure ranges**
- **GOSSTANDART-certified**

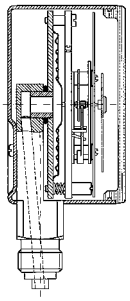

Application

For gaseous, dry media which do not attack copper alloys.
! For measuring gas or vapour, these gauges must be used in accordance with the table "Selection Criteria as per EN 837-2" (see appendix)!

Technical specifications

Types
D2 / D3

Nominal size
100

Accuracy class (EN 837-3/6)
1.6

Ranges (EN 837-3/5)
0/25 to 0/1,000 mbar and all corresponding vacuum and compound ranges with overpressure protection

Application area
Static load: full scale value
Dynamic load: 0.9 x full scale value
Overload safety: 1.3 x full scale value

Operating temperature range
Medium: T_{max} = +60 °C
Ambient: T_{min} = -20 °C
T_{max} = +60 °C

Temperature performance
Indication error when the temperature of the measuring system deviates from the normal temperature of 20 °C: rising temperature approx. ±0.6 %/10 K
falling temperature approx. ±0.6 %/10 K
of full scale value

Degree of protection
IP 44 (EN 60529)

Connection
Brass, bottom
G½B – spanner size SW 22
(EN 837-3/7.3)

Measuring element
Capsule element, CuBe alloy

Movement
Brass

Zero correction
From the front

Seal
NBR (Perbunan)

Dial
Aluminium, white
Dial marking black

Pointer
Aluminium, black

Housing
D 2 – black, sheet steel
D 3 – stainless steel 304

Window
Clip-in plastic

10

DG: M, PG: 2	Housing	Part no.	Prices €
KP100 D201, 0/25 mbar	Sheet steel	**35116201**	
KP100 D201, 0/40 mbar	Sheet steel	**35117201**	
KP100 D201, 0/60 mbar	Sheet steel	**35118201**	
KP100 D201, 0/100 mbar	Sheet steel	**35119201**	
KP100 D201, 0/160 mbar	Sheet steel	**35120201**	
KP100 D201, 0/250 mbar	Sheet steel	**35121201**	
KP100 D201, 0/400 mbar	Sheet steel	**35122201**	
KP100 D201, 0/600 mbar	Sheet steel	**35123201**	
KP100 D201, 0/1,000 mbar	Sheet steel	**35124201**	
KP100 D301, 0/25 mbar	Stainless steel	**35116301**	
KP100 D301, 0/40 mbar	Stainless steel	**35117301**	
KP100 D301, 0/60 mbar	Stainless steel	**35118301**	
KP100 D301, 0/100 mbar	Stainless steel	**35119301**	
KP100 D301, 0/160 mbar	Stainless steel	**35120301**	
KP100 D301, 0/250 mbar	Stainless steel	**35121301**	
KP100 D301, 0/400 mbar	Stainless steel	**35122301**	
KP100 D301, 0/600 mbar	Stainless steel	**35123301**	

i
See the catalogue INDUSTRIAL TECHNOLOGY for other versions.

Standard capsule pressure gauges

EN 837-3

- **Housing: Stainless steel version with bayonet bezel**
- **With zero correction**
- **Optional overpressure and/or underpressure safety 10 x FSD**
- **Extremely low measuring range from 0/6 mbar**
- **GOSSTANDART-certified**

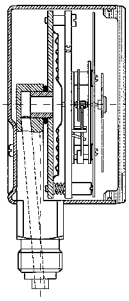

Application

For gaseous, dry media which do not attack copper alloys.
! For measuring gas or vapour, these gauges must be used in accordance with the table "Selection Criteria as per EN 837-2" (see appendix)!

Technical specifications

Type
D 4

Nominal size
100

Accuracy class (EN 837-3/6)
1.6

Ranges (EN 837-3/5)
0/25 to 0/1,000 mbar and all corresponding vacuum and compound ranges with overpressure protection

Application area
Static load: full scale value
Dynamic load: 0.9 x full scale value
Overload safety: 1.3 x full scale value

Operating temperature range
Medium: T_{max} = +60 °C
Ambient: T_{min} = -20 °C
T_{max} = +60 °C

Temperature performance
Indication error when the temperature of the measuring system deviates from the normal temperature of +20 °C:
rising temperature approx. ±0.6 %/10 K
falling temperature approx. ±0.6 %/10 K
of full scale value

Degree of protection
IP 54 (EN 60529)

Connection
Brass, bottom
G½B – spanner size SW 22 (EN 837-3/7.3)

Measuring element
Capsule element, CuBe alloy

Movement
Brass

Zero correction
From the front

Seal
NBR (Perbunan)

Dial
Aluminium, white
Dial marking black

Pointer
Aluminium, black

Housing
Stainless steel 304

Bayonet type bezel
Stainless steel 304

Window
Instrument glass

10

DG: M, PG: 2	Housing	Part no.	Prices €
KP100 D401, 0/40 mbar	Stainless steel	35117401	
KP100 D401, 0/60 mbar	Stainless steel	35118401	
KP100 D401, 0/100 mbar	Stainless steel	35119401	
KP100 D401, 0/160 mbar	Stainless steel	35120401	
KP100 D401, 0/250 mbar	Stainless steel	35121401	
KP100 D401, 0/400 mbar	Stainless steel	35122401	

i
See the catalogue INDUSTRIAL TECHNOLOGY for other versions.

Shut-off cocks and valves for pressure gauges

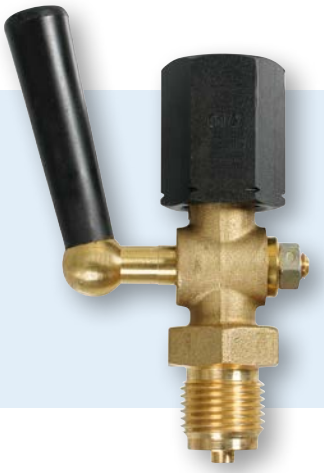

Shut-off cocks for pressure gauges

Application

Shut-off element between pipe and pressure gauge. Stop cocks with test port allow you to connect both pressure gauges and testers to the pipe. Suitable for liquids, gases and vapour.

Technical specifications

Version
DIN 16261 to 16263
(or based on DIN)

Operating temperature range
Medium: -10/+50 °C

Connection and nominal pressure
See price list.

Housing and tap
Brass bare metal surface or stainless steel bare metal surface. The tap contains two holes which are arranged in the shape of a T. The function depends on
the tap position:
1. Vent pressure gauge
2. Apply pressure to pressure gauge
3. Blow out measuring line
4. Apply pressure to tester

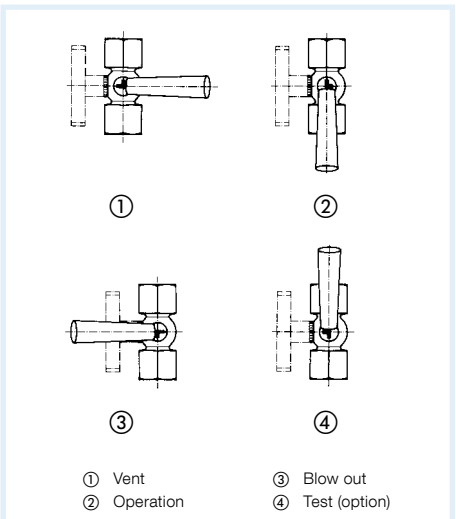

Shut-off valves for pressure gauges

Shut-off or reducing element between pipe and pressure gauge. Stop valves with test port allow you to connect both pressure gauges and testers to the measuring line. Suitable for liquids, gases and vapour.

Version

DIN 16270	without test port
DIN 16271	with test port, male M20 x 1.5
DIN 16272	with test port which can be closed separately, male, see 16271
Type A	female/female x male connection
Type B	loose female coupling x male connection and shaft for instrument bracket

Operating temperature range

Brass	-10/+120 °C
Steel 1.0460	-10/+120 °C
Stainless steel 316 Ti	-20/+200 °C

Connection and nominal pressure
See price list.

10

Materials

Parts	Brass	Steel	Stainless steel
Housing	Brass	1.0460	316 Ti
Valve spindle	Brass	430 F	316 Ti
Valve cone	Brass	430 F	316 Ti
Packing	PTFE	PTFE	PTFE
Cap	Brass	Steel	Stainless steel
Union nut	Brass	Steel	Stainless steel
Female/female connection	Brass	Steel	Stainless steel
Loose female coupling	Brass	Steel	Stainless steel
Vent screw	316 Ti	316 Ti	316 Ti
Wheel	Plastic	Plastic	Plastic

Accessories for pressure gauges

DG: H

Pressure gauge shut-off cock female x female						
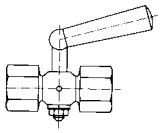	Connection	Nominal pressure	Material	PG	Part no.	**Price €**
	G¼	PN 6	Brass	2	**63001**	
	G⅜	PN 16	Brass	2	**63002**	
	G½	PN 16	Brass	2	**63003**	
With round test flange 40 x 5	G½	PN 16	Brass	2	63004	
With test flange 60 x 25 x 10	G½	PN 16	Brass	2	**63005**	
With sealing gland	G½	PN 16	Brass	2	**63006**	

Pressure gauge shut-off cock female x male						
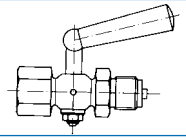	Connection	Nominal pressure	Material	PG	Part no.	**Price €**
	G¼	PN 6	Brass	2	**63011**	
	G⅜	PN 16	Brass	2	**63012**	
	G½	PN 16	Brass	2	**63013**	
With round test flange 40 x 5	G½	PN 16	Brass	2	63009	
With test flange 60 x 25 x 10	G½	PN 16	Brass	2	63010	

Pressure gauge shut-off cock female/female x male						
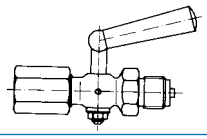	Connection	Nominal pressure	Material	PG	Part no.	**Price €**
	G¼	PN 6	Brass	2	63014	
	G½	PN 16	Brass	2	**63027**	
	G½	PN 16	1.4571	3	**63090**	
With test flange 60 x 25 x 10	G½	PN 16	Brass	2	**63028**	
With test flange 60 x 25 x 10	G½	PN 16	1.4571	3	63091	
With male test connection M20 x 1.5	G½	PN 16	Brass	2	63015	
With male test connection M20 x 1.5	G½	PN 16	1.4571	3	63016	

Pressure gauge shut-off cock loose female x female						
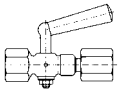	Connection	Nominal pressure	Material	PG	Part no.	**Price €**
	G½	PN 16	Brass	2	63017	
With test flange 60 x 25 x 10	G½	PN 16	Brass	2	63018	

Pressure gauge shut-off cock loose female x male						
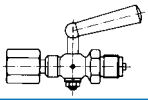	Connection	Nominal pressure	Material	PG	Part no.	**Price €**
	G½	PN 16	Brass	2	63107	
With test flange 60 x 25 x 10	G½	PN 16	Brass	2	63024	

Pressure gauge shut-off valve DIN 16270
Type A – female/female x male connection
Type B – loose female coupling x male connection and shaft for instrument bracket

Type A	Type B	Connection	Nominal pressure	Material	PG	Type A	**Price €**	Type B	**Price €**
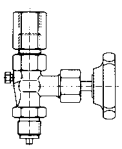	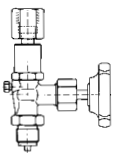					Part no.		Part no.	
		G¼	PN 125	Brass	2	**63094**		---	**---**
		G½	PN 250	Brass	2	**63092**		63046	
		G½	PN 400	Steel	3	63040		63047	
		G½	PN 400	1.4571	3	**63093**		63048	
Test connection male M20 x 1.5 **DIN 16271**		G½	PN 250	Brass	2	**63041**		63049	
		G½	PN 400	Steel	3	63042		63108	
		G½	PN 400	1.4571	3	63044		63109	
Extra charge oil-free and grease-free*						63045	**On request**	63110	**On request**
Extra charge DVGW-tested								---	

* Only for brass and stainless steel.

Overpressure safety device, Pressure gauge push-button stop cock

Overpressure safety device

Overpressure safety device

Application

Adjustable overpressure safety device used to protect the system against peak pressures exceeding the range of the pressure gauge. At measuring points which are subject to great pressure variations, you can install different pressure gauges with different ranges in order to precisely measure even the lower pressures. The overpressure safety devices are adjusted according to the maximum permissible pressure ratings of the various pressure gauges installed.

Technical specifications

Function
When the set pressure is reached, a piston valve shuts off the port to the pressure gauge. After the pressure has dropped to a value of approx. 25 % below the closing pressure, the valve opens again.

Operating temperature range
Max. +80 °C

Overpressure safety
Brass: 600 bar
Stainless steel: 1,000 bar
Max. vacuum range up to -1 bar, no adjustment function

Connection
G½ female/female connection x male connection

Materials overpressure safety device

Parts	Brass	Stainless steel
Housing	Brass	316 Ti
Piston	316 Ti	316 Ti
Female/female connection	Steel	303
Diaphragm	FKM	FKM
O ring	FKM	FKM

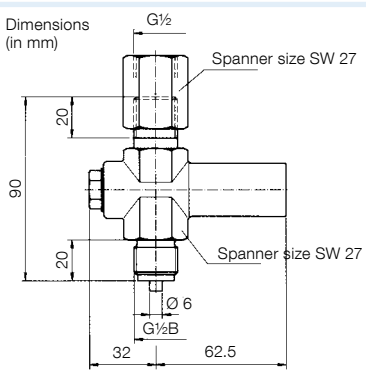

Pressure gauge push-button stop cock

Pressure gauge push-button stop cock

Application

Shut-off element between measuring line and pressure gauge. Normally, the push-button stop cock is closed. In this state, there is no pressure applied to the pressure gauge. Push the button to apply pressure to the pressure gauge and to display the operating pressure. Suitable for gases as per DVGW G260 and SVGW.

Technical specifications

Test
DVGW- and SVGW-tested, with EC Type Examination Certificate, product ID number CE-0085AQ0985

Operating temperature range
Medium: 0/70 °C
Ambient: -20/+60 °C

Connection
2 x female thread
Rp ½, EN 10226
Rp ¼ EN 10226
½ NPT (without test)
¼ NPT (without test)

Nominal pressure
5 bar (MOP 5)

Housing
Brass, nickel-plated

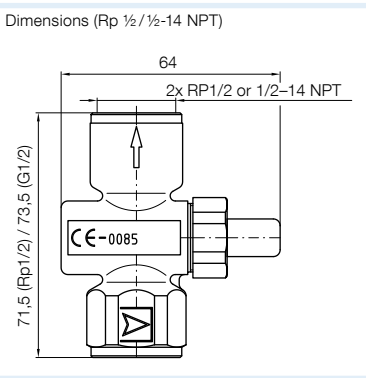

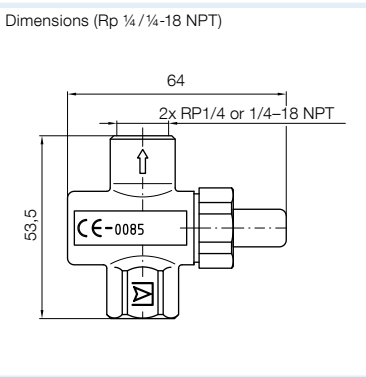

10

Accessories for pressure gauges

DG: H

Pressure gauge push-button stop cock female x female – DVGW- and SVGW-tested/CE-0085AQ0985

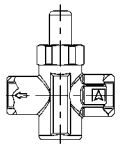

Connection	Nominal pressure	Material	PG	Part no.	Price €
Rp ½, EN 10226	MOP 5	Brass, nickel-plated	2	**63031**	
Rp ¼, EN 10226	MOP 5	Brass, nickel-plated	2	**63191**	
¼-18 NPT*	MOP 5	Brass, nickel-plated	2	**63193**	
½-14 NPT*	MOP 5	Brass, nickel-plated	2	**63235**	

* Without DVGW and SVGW approval.

Overpressure safety device G½ female/female connection x male – adjustable, vacuum-tight

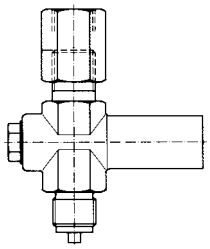

Adjustment range in bar	Material	PG	Part no.	Price €	Material	PG	Part no.	Price €
0.4 - 2.5	Brass	2	63131		316 Ti	3	63139	
2–6	Brass	2	63132		316 Ti	3	63140	
5–25	Brass	2	63133		316 Ti	3	63141	
20–60	Brass	2	63134		316 Ti	3	63142	
50–250	Brass	2	63135		316 Ti	3	63143	
240–400	Brass	2	63136		316 Ti	3	63144	
Extra charge oil-free and grease-free		-	63137	**On request**		-	63145	**On request**
Extra charge DVGW-tested		-	63138			-	63146	

Damping device (pressure surge protection) female x male – adjustable

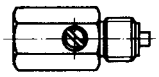

Connection	Nominal pressure	Material	PG	Part no.	Price €
G½	PN 400	Brass	2	**63074**	
G½	PN 400	Steel	3	63075	
G½	PN 400	316 Ti	3	**63076**	

10

Siphon DIN 16282 – outlet female/female connection G½

	Type	Inlet	Material	Nominal pressure	PG	Part no.	Price €
U shape 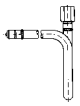	A*	G½B	Steel	PN 100	3	63147	
	B	Without thread, welded end 20 x 2.6 mm	Steel	PN 100	3	**63148**	
	A*	G½B	316 Ti	PN 100	3	**63149**	
Circular shape 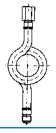	C*	G½B	Steel	PN 100	3	63150	
	D	Without thread, welded end 20 x 2.6 mm	Steel	PN 100	3	**63151**	
	C*	G½B	316 Ti	PN 100	3	63152	

* Types A and C are no longer provided for in the new DIN edition.

Siphon – standard – inlet G½

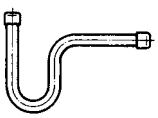

U shape	Circular shape	Type	Outlet	Material	Nominal pressure	PG	Part no.	Price €
		U	G½B	Steel	PN 25	3	**63085**	
		U	Female/female connection G½B	Steel	PN 25	3	**63153**	
		Circular	G½B	Steel	PN 25	3	**63081**	
		Circular	Female/female connection G½B	Steel	PN 25	3	63154	

Mounting valve with self-sealing coating – automatically closes when the pressure gauge is replaced

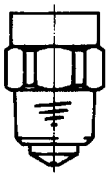

Female connection	Male connection	Material	PG			Part no.	Price €
G¼	G¼	Brass	2	1	–	**77907**	
G¼	G⅜	Brass	2	1	–	**77908**	
G⅜	G⅜	Brass	2	1	–	**77917**	
G¼	G½	Brass	2	1	–	**77914**	
G⅜	G½	Brass	2	25	250	77918	

Accessories for pressure gauges

DG: H

Connection nipple – self-sealing

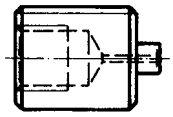

Female connection	Male connection	Material	PG	Part no.	Price €
G⅛	G¼	Brass	2	**63067**	
G¼	G⅜	Brass	2	**63068**	
G¼	G½	Brass	2	**63069**	
G⅜	G½	Brass	2	**63065**	

Reducers and adapters

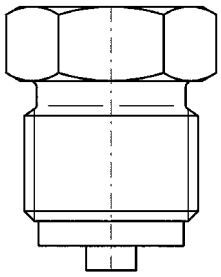

Female connection	Male connection	Material	PG	Part no.	Price €
G⅛	G¼	Brass	2	**63050**	
G¼	G⅛	Brass	2	**63052**	
G¼	G⅜	Brass	2	**63053**	
G¼	G½	Brass	2	**63054**	
G¼	G½	316 Ti	3	63051	
G⅜	G¼	Brass	2	**63056**	
G⅜	G½	Brass	2	**63057**	
G½	G¼	Brass	2	**63058**	
G½	G⅜	Brass	2	**63059**	
G½	G⅜	316 Ti	3	63062	
G½	M 20 x 1.5	Brass	2	63155	
M 20 x 1.5	G½	Brass	2	63156	

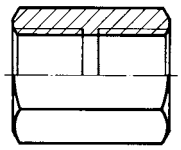

Female connection	Female connection	Material	PG	Part no.	Price €
G¼	G⅛	Brass	2	63158	**On request**
G¼	G¼	Brass	2	63159	
G½	G¼	Brass	2	63160	**On request**
G½	G½	Brass	2	63161	

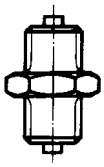

Male connection	Male connection	Material	PG	Part no.	Price €
G½	G½	Brass	2	63164	
G½	G½	316 Ti	3	63165	

Female/female connection DIN 16283

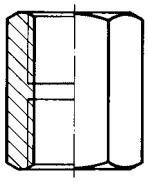

Female connection	Female connection	Material	PG	Part no.	Price €
G¼ left	G¼	Brass	2	63101	
G¼ left	G¼	Steel	3	63102	
G¼ left	G¼	316 Ti	3	63103	
G½ left	G½	Brass	2	63104	
G½ left	G½	Steel	3	63105	
G½ left	G½	316 Ti	3	63106	

Union nut + nipple DIN 16284

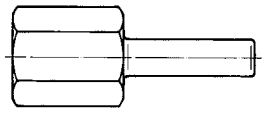

Female connection	Male connection	Material	PG	Part no.	Price €
G¼	6 mm	Brass	2	**63072**	
G½	12 mm	Brass	2	**63084**	
G½	12 mm	316 Ti	3	63070	

CATALOGUE INDUSTRIAL TECHNOLOGY

Pressure measuring instrument for industrial applications and process engineering

Standard pressure gauges

- For pneumatic and mechanical engineering applications
- Highly impact-resistant plastic housing or robust steel or stainless steel housing
- Window with adjustable reference pointer
- Options: Special scales, connections for different processes, mounting flanges, etc.

Nominal sizes
40 – 50 – 63 – 80 – 100

Accuracy class
1.6

From page 21

Pressure gauges for industrial applications

- For machine and plant engineering
- Robust steel or stainless steel housing
- Optionally with electrical contact

Nominal sizes
100

Accuracy class
1.0

From page 32

i

This and many other products can be found in the catalogue INDUSTRIAL TECHNOLOGY

Glycerine filled pressure gauges

- Can be used in case of heavy vibrations and high, dynamic pressure loads
- Less wear and corrosion protection of the measuring system
- No steaming up of the inside of the window in case of outdoor applications

Nominal sizes
40 – 50 – 63 – 80 – 100 – 160

Accuracy class
1.0 or 1.6

From page 38

Pressure gauges for chemical applications

- For chemical and process engineering applications
- Measuring system fully welded to housing
- For temperatures of the medium of up to 150 °C

Nominal sizes
50 – 63 – 100 – 160

Accuracy class
1.0 or 1.6

From page 55

AFRISO

Safety pressure gauges

- **Safety pressure gauge** S3 as per EN 837-1/9.7.2
- Measuring system fully welded to housing

Nominal sizes
63 – 100 – 160

Accuracy class
1.0 or 1.6

From page 67

Pressure gauges for refrigeration engineering

- Can be used in case of heavy vibrations and high, dynamic pressure loads
- Various refrigerants measurable with multiple scales

Nominal sizes
60 – 80 – 100

Accuracy class
1.0 or 1.6

From page 90

Precision pressure gauges

- High measuring accuracy
- Suitable as measuring equipment as per QA requirements

Nominal sizes
160 – 250

Accuracy class
0.25 or 0.6

From page 79

Pressure gauges with electrical contacts

- Up to 3 contacts possible
- **Either** magnetic spring contact, electronic contact or inductive contact

Nominal sizes
63 – 100 – 160

Accuracy class
1.0 or 1.6

From page 103

Magnetic piston pressure gauges

- **For** differential pressure measurement at high pressure, e.g. monitoring of filters, pumps, pipes or cooling circuits
- High overload protection: Max. static pressure PN 100 to 400

Nominal sizes
63 – 80 – 100

From page 138

Pressure gauges for differential pressure

- Measurement of extremely small differential pressures
- Direct indication of the differential pressure
- High overload protection

Nominal sizes
63 – 100 – 160

Accuracy class
1.6 or 2.5

From page 133

Pressure transducer DMU 02 Vario

- Connection technology with numerous versions for applications in many industries
- Extremely resistant to shock, pulsation and vibration
- Best dynamic pressure resistance at high load changes

Measuring ranges
-1/0 to -1/+24 bar
0/1 to 0/1,000 bar

From page 210

Pressure transducer DMU 01 K

- Compact version for OEMs
- Proven ceramic technology
- No mechanical ageing of the measuring cell

Measuring ranges
0/1.6 to 0/250 bar

From page 203

Digital pressure gauge DIM 20

- High flexibility due to selectable units
- Min./max. memory
- Display can be rotated by 330 °

Measuring ranges
-1/0 bar, 0/2.5 bar to 0/700 bar

From page 252

Bimetal thermometers

Thermometers with capillary tube

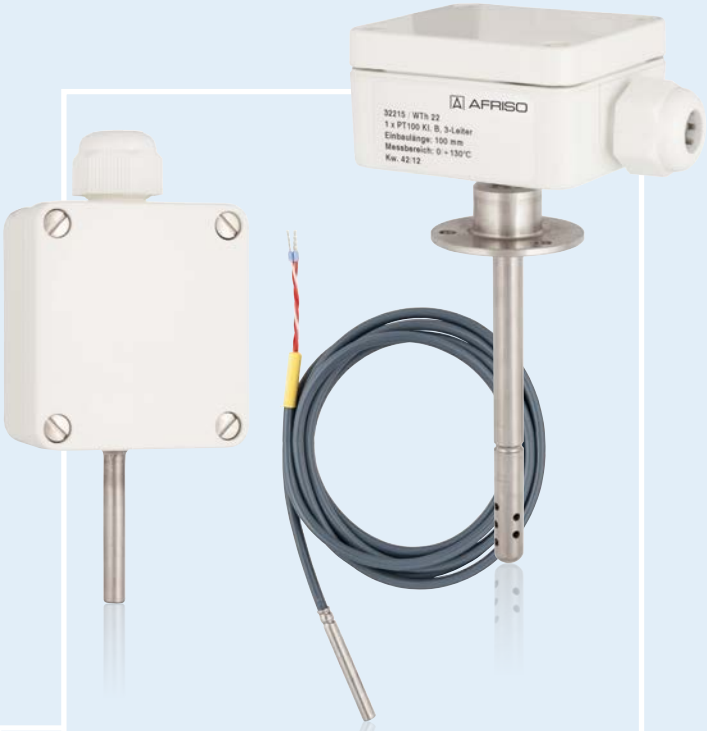

Resistance thermometers

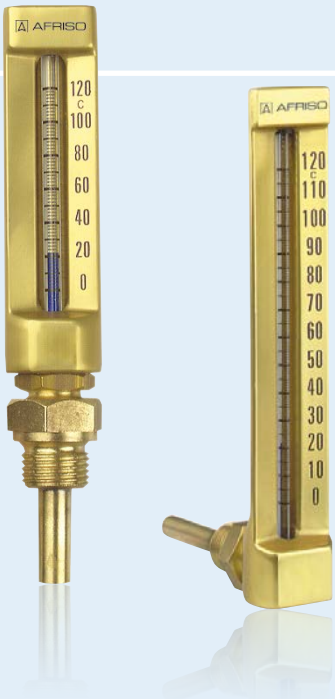

Industrial thermometers

CHAPTER 11

Temperature measuring instruments and controllers

OVERVIEW

Mechanical temperature measuring instruments at a glance 338

Electronic temperature measuring instruments at a glance 340

Thermometers with capillary tube 342

HEATING/PLUMBING

Thermometers THK with capillary tube 343

Combined thermometer/pressure gauges THMK with capillary 345

Combined thermometer/pressure gauges TM / thermo-hydrometers TH 349

Bimetal thermometers BiTh for heating/plumbing applications 352

Bimetal standard thermometers, surface mount thermometers ATh, flue gas thermometers RT, flue gas temperature controller RTC 355

Temperature control thermostats TRT with capillary tube 372

Safety temperature cut outs STB with capillary 374

Surface mounting thermostats with housing GAT 378

Immersion thermostats with housing GTT 380

Thermostats with housing GTK with capillary tube 382

Room thermostats with housing GRT 384

Twin thermostats with housing GDT 386

Resistance thermometers WTh 20–23 389

PLANT/VENTILATION ENGINEERING

Bimetal thermometers for industrial applications, bimetal air duct thermometers 360

Bimetal stainless steel thermometers 365

Connection types for bimetal thermometers 369

Industrial thermometers VMTh 370

ACCESSORIES

Pockets for thermometers and thermostats with capillary tube 377

Mechanical temperature measuring instruments at a glance

		Thermometers with capillary	Bimetal thermometers	Bimetal standard thermometers	Surface mount thermometers	Flue gas thermometers
Heating, plumbing	Application areas	•	•	•	•	•
Mechanical and plant engineering						
Process engineering						
Chemical applications						
Food industry						
Hygienic processes						
Corrosive media						
NG 40		•	•			
NG 50			•	•		
NG 52		•				
NG 63			•	•	•	
NG 80			•	•	•	•
NG 100			•	•		
NG 160				•		
Profile housing		•				
-40/+40 °C	Ranges	•				
-30/+50 °C						
-20/+60 °C			•	•		
-20/+40 °C					•	
0/60 °C			•	•	•	
0/120 °C		•	•	•	•	
0/160 °C				•		
0/200 °C						
≥ 0/300 °C						•
Class 1 (EN 13190)	Accuracy					
Class 2 (EN 13190)			•	•	•	•
DIN 16195						
Plastic	Housing	•	•		•	
Sheet steel galvanised				•	•	•
Aluminium, eloxed						
Stainless steel 304						
Stem	Connection		•	•		•
Plug-on			•			
Mounting flange						
Flange						
Fastening spring/clip					•	
Magnetic holder					•	
Capillary tube		•				
Other ranges	Options	•		•	•	
Other connection designs		•				
Glycerine filling						
Electrical contacts						
		Page 343	Page 352	Page 355	Page 355	Page 355

i

Technical specifications, application areas and suitability depend on the product version. See catalogue data sheet and/or operating instructions for options and details.

Bimetal thermometers for industrial applications	Bimetal air duct thermometers	Bimetal stainless steel thermometers	Bimetal thermometers for chemical applications	Gas filled thermometers for chemical applications	V-shaped industrial thermometers
•	•				•
•	•	•	•	•	•
		•	•	•	•
			•	•	
		•	•	•	
		•	•	•	
		•	•	•	
•	•	•	•		
•	•	•			
•	•	•	•	•	
•			•	•	
•		•	•		
•	•	•	•		•
•	•	•	•	•	
•	•	•	•		
•	•	•	•	•	•
•		•	•	•	•
•		•	•	•	•
•		•	•	•	
•		•	•	•	
•		•	•		
	•				
					•
•	•				
					•
		•	•	•	
•	•	•	•	•	•
	•			•	
	•			•	
				•	
•	•	•	•	•	•
•		•	•	•	•
			•	•	
				•	
Page 360	Page 360	Page 365	Page 273	Page 278	Page 370

11

Electronic temperature measuring instruments at a glance

		Resistance thermometer WTh 20	Resistance thermometer WTh 21	Resistance thermometer WTh 22	Resistance thermometer WTh 23	Resistance thermometer WTh 24
Heating, plumbing	Application areas	•	•	•	•	
Air conditioning/ventilation			•	•	•	
Pipeline engineering				•	•	
Mechanical and plant engineering					•	•
Appliance engineering						•
Chemical / process engineering						•
Pharmaceutical / biotechnology						
Food industry / hygienic processes						
Corrosive media						•
High temperatures						
High pressure loads						
Cable probe	Version	•				
Fixed thread					•	•
Screwed pipe connection						
Flange connection						
Clamp connection						
Varivent connection						
Weld-in thermometer						
Pt 100, class A	Sensor				•	•
Pt 100, class B		•	•	•	•	•
100 mm	Installation lengths			•	•	•
125 mm						
160 mm				•		•
≥ 250 mm				•		•
Housing plastic	Material		•	•		
Housing aluminium					•	•
Wetted parts 316 Ti		•	•	•	•	•
Wetted parts 316 L						
Cable (wire ferrules)	Electr. connection	•				
Cable gland			•	•	•	•
Connector						
Other designs	Options	•	•		•	
Other process connections				•	•	
Transmitter installation			•	•		•
		Page 389	Page 389	Page 390	Page 390	Page 288

i

Technical specifications, application areas and suitability depend on the product version. See catalogue data sheet and/or operating instructions for options and details.

Resistance thermometers WTh 25	Resistance thermometers WTh 26	Resistance thermometers WTh 27	Resistance thermometers WTh 28	Resistance thermometers WTh 30
				•
•	•	•		•
•	•			•
•	•	•		•
			•	•
			•	•
•	•	•	•	•
•	•	•		•
	•			
•				•
		•		
			•	•
				•
	•			
•	•	•	•	•
•	•	•	•	
•	•	•	•	•
•			•	
•	•	•	•	
•	•	•	•	
•	•	•	•	
•	•	•	•	
				•
•	•	•	•	
				•
•	•	•	•	•
•	•	•	•	•
•	•	•	•	•
Page 288	Page 290	Page 290	Page 290	Page 295

11

Thermometers with capillary tube

For burners, boiler, hot water tanks and air conditioning/refrigeration systems, AFRISO offers different temperature and pressure measuring instruments with various housing versions and connection types. The portfolio covers thermometers and pressure gauges with plastic or copper capillary as well as combination instruments such as combined thermometer/pressure gauges. We also provide OEM versions for your specific applications. Please enquire.

Application examples

11

See page 310 for pressure gauge with capillary tube.

Thermometers THK with capillary tube

- **Ideal for boilers and water heaters**
- **Corrosion-resistant, highly impact-resistant plastic housing**
- **Many customised versions available**

Page 377

Application

Heating and plumbing, e.g. boilers, water heaters, hot water storage tanks

Technical specifications

Nominal size
37 – 40 – 52 – 45 x 45

Range
0/120 °C

Accuracy/test point
50 °C = ± 3 °C

Measuring principle
Liquid filling

Operating temperature range
Medium: Full scale value
Ambient: T_{max} = +70 °C

Operating pressure
No pressure

Degree of protection
IP 32 (EN 60529)

Standard version

Connection
Back, with Cu capillary tube
Probe: ø 6 x 30 mm, Cu
(see data sheet)

Dial
Plastic (ABS), white or black
Dial marking black

Pointer
Plastic, black or white

Housing
Plastic (ABS), white, black or grey
Highly impact-resistant and corrosion-resistant

Window
Clip-in plastic, transparent
RFK 52 with bezel

Capillary length
Cu capillary with PVC coating, R3, grey
L = 500, 1,000, 1,500, 2,000 mm

Options

- Dial with customer logo
- Various capillary lengths
- Special colours for housing, dial, pointer

i
See page 347 for prices.

Thermometers THK with capillary tube

Dimensions (in mm)

Type THK 37

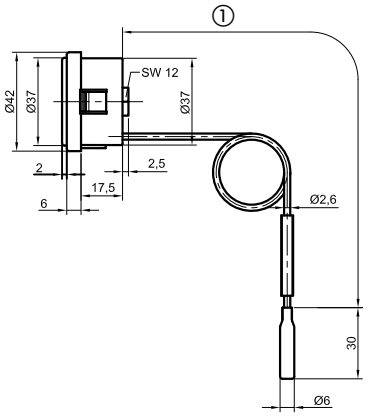

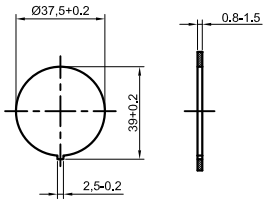

① Capillary length

Type THK 40

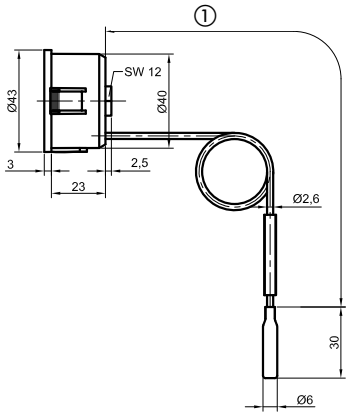

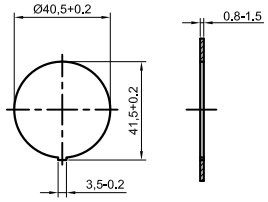

① Capillary length

Type THK 45

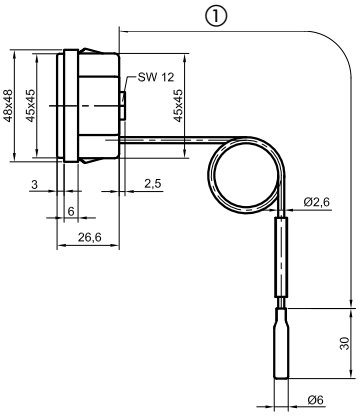

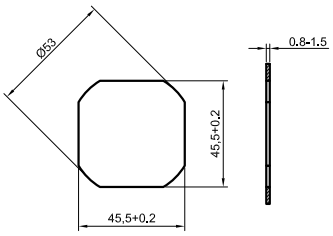

① Capillary length

Type THK 52

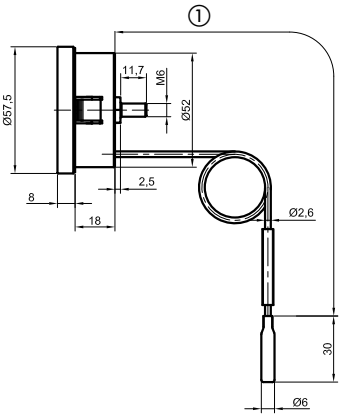

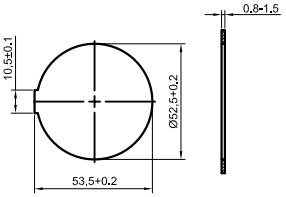

① Capillary length

Combined thermometer/pressure gauges THMK with capillary tube

- **Ideal for boilers and hot water storage tanks**
- **Corrosion-resistant, highly impact-resistant plastic housing**
- **Many customised versions available**

Page 377

Application

Heating, cooling and plumbing, e.g. boilers, hot water storage tanks.

Technical specifications

Nominal size
40 – 52

Ranges
0/120 °C - 0/4 bar
0/120 °C - 0/6 bar
0/120 °C - 0/10 bar

Accuracy/test point
For pressure: Cl. 4.0
For temperature: 0/120 °C: 50 °C = ± 3 °C

Measuring principle
For pressure: Bourdon tube, copper alloy
For temperature: Liquid filling

Application area
For pressure:
Static load: ¾ x full scale value
Dynamic load: 2/3 x full scale value
Short-term: full scale value
For temperature: Full scale value

Operating temperature range
Medium: Full scale value
Ambient: T_{max} = +70 °C

Operating pressure
No pressure

Degree of protection
IP 32 (EN 60529)

Standard version

Connection
Back, with Cu capillary tube
For pressure: Brass disk G¼ B
For temperature: Probe ø 6 x 30 mm, Cu (see data sheet)

Dial
Plastic (ABS), white or black
Dial marking black

Pointer
Plastic, black

Housing
Plastic (ABS), white or grey
Highly impact-resistant and corrosion-resistant

Window
THMK 40 = Clip-in plastic, transparent
THMK 52 = Plastic, transparent with reference pointer

Bezel
THMK 52 = Push-on bezel
Plastic (ABS), grey

Capillary length
Cu capillary with PVC coating, R3, grey
L = 500, 1,000, 1,500, 2,000 mm

Options

- Dial with customer logo
- Various capillary lengths
- Special colours for housing, dial, pointer

i
See page 347 for prices.

Combined thermometer/pressure gauges THMK with capillary tube

Dimensions (in mm)

Type THMK 40

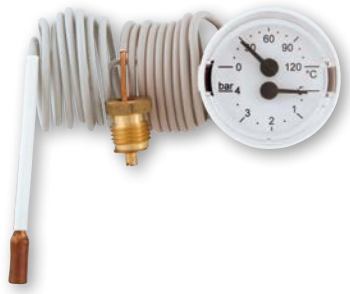

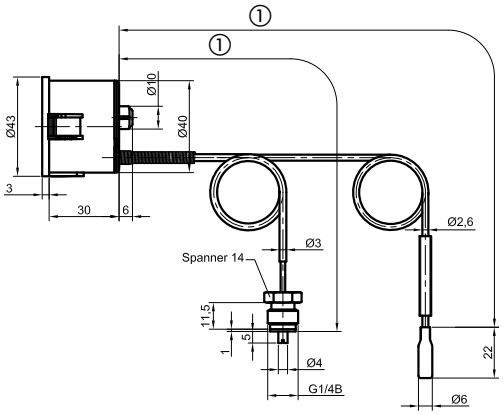

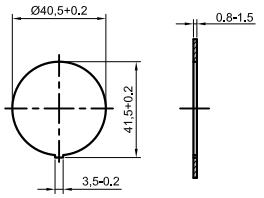

① Capillary length

Type THMK 52

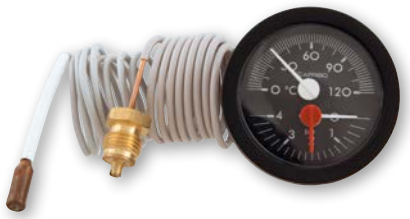

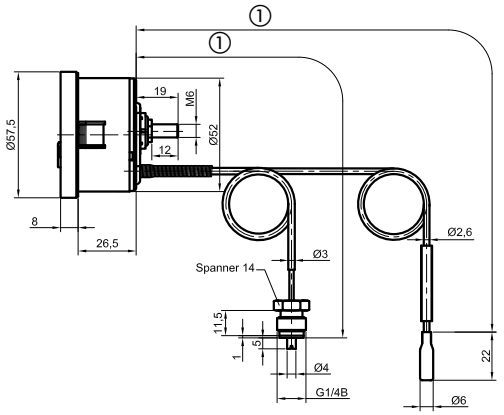

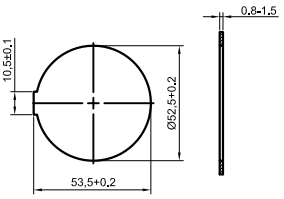

① Capillary length

11

Thermometers with capillary tube

DG: G, PG: 2

Type	THK 37	THK 40	THK 45	THK 52	THMK 40	THMK 52
Version						
Housing Ø	37	40	45 x 45	52	40	52
Housing	Plastic (ABS), grey	Plastic (ABS), white	Plastic (ABS), black	Plastic (ABS), grey, with bezel, black	Plastic (ABS), white	Plastic (ABS), grey, with bezel, black
Pointer	Plastic, black		Plastic, white		Plastic, black	Plastic, white
Dial/scale	Dial white / scale black		Dial black / scale white		Dial white / scale black	Dial black / scale white
Packing unit**	50 pieces					
Range	0/120 °C	0/120 °C	0/120 °C	0/120 °C	0/120 °C - 0/4 bar	
Capillary length*	**Price €** Part no.	**Price €** Part no.	**Price €** Part no.	**Price €** Part no.	**Price €** Part no.	**Price €** Part no.
500 mm				67502105		
1,000 mm	**67512115**			67502115		
1,500 mm	**67512125**	**67652125**	**67522125**	**67502125**		**67635125**
2,000 mm	**67512135**					
Range	---	---	---	---	0/120 °C - 0/6 bar	
Capillary length*	---	---	---	---	**Price €** Part no.	**Price €** Part no.
500 mm	---	---	---	---		
1,000 mm	---	---	---	---		
1,500 mm	---	---	---	---		**67636125**
2,000 mm	---	---	---	---		
Range	---	---	---	---	0/120 °C - 0/10 bar	
Capillary length*	---	---	---	---	---	**Price €** Part no.
500 mm	---	---	---	---	---	
1,000 mm	---	---	---	---	---	
1,500 mm	---	---	---	---	---	
2,000 mm	---	---	---	---	---	

* Other capillary lengths on request.
** Minimum order quantity for non-stock items = 100 pieces per delivery.

Thermometers THK with capillary tube

DG: G, PG: 2

Type	THK 58 S Cu	THK 58 Cu	THK 62 Cu	THK 62 Cu
Version	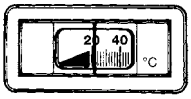	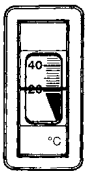		
Nominal size (W x H)	58 x 25 mm	25 x 58 mm	62 x 11 mm	62 x 11 mm
Housing	Plastic, black			
Dial/scale	Dial white / numbers black			
Mounting position	Horizontal	Vertical	Horizontal	Horizontal
Capillary	Cu capillary with PVC jacket (R3, grey), Cu probe Ø 6.5 x 30 mm		Cu capillary with PVC jacket (R3, grey), Cu probe Ø 6.5 x 25 mm	
Packing unit	100 pieces			
Range	0/120 °C	0/120 °C	0/120 °C	0/120 °C
Capillary length*	**Price €** Part no.**	**Price €** Part no.**	**Price €** Part no.**	**Price €** Part no.**
1,000 mm	67542115	67542115s	67562115	67582115
1,500 mm	**67542125**	**67542125s**	67562125	67582125
2,000 mm	67542135	67542135s	67562135	67582135
3,500 mm	**67542155**	---	---	---

* Other capillary lengths on request.
** Minimum order quantity for non-stock items = 300 pieces.

11

Combined thermometer/pressure gauges / thermo-hydrometers TM

- **Pressure and temperature measurement with at a single measuring point**
- **With self-sealing connection thread for fast mounting**
- **Bottom connection or back connection**
- **With mounting valve for easy replacement without downtime**

Bottom connection version

Application

For liquid media which are not highly viscous, do not crystallise and do not attack copper alloys.
For combined measurement of pressure and temperature, especially in heating systems and heating boilers.

Description

The combined thermometer/pressure gauge / thermo-hydrometer consists of a Bourdon tube measuring system for pressure measurement and a bimetal measuring system for simultaneous temperature measurement. Both values are measured and displayed by a single gauge. A self-closing mounting valve enables easy replacement of the gauge without the necessity to drain the system.
An optional M18 x 1 to G¼ adapter is available if the combined thermometer/pressure gauge has to be mounted into an existing thermowell with M18 x 1 female thread.

Technical specifications

Type
D 1/D 2

Nominal size
63 – 80

Accuracy class
Pressure gauge/hydrometer: 2.5 (EN 837-1/6)

Application area
Pressure gauge/hydrometer:
Static load: ¾ x full scale value Dynamic load: ⅔ x full scale value
Short-term: full scale value
Thermometer: 20/120 °C

Ranges
Pressure gauge/hydrometer:
0/4 bar to 0/10 and 0/6 mWC to 0/60 mWC
Thermometer: 20/120 °C

Operating temperature range
Medium: T_{max} = +120 °C
Ambient: T_{min} = -20 °C
T_{max} = +60 °C

Temperature performance
Pressure gauge/hydrometer:
Indication error when the temperature of the measuring system deviates from the normal temperature of 20 °C:
rising temperature approx. ±0.4 %/10 K
falling temperature approx. ±0.4 %/10 K
of full scale value

Degree of protection
IP 32 (EN 60529)

Standard version

Connection
Brass, bottom or centre back G¼B with mounting valve G¼ to R½

Measuring element
Pressure: Bourdon tube, copper alloy
Temperature: bimetal element

Dial
Plastic, white
Dial marking black with red/blue circular arcs

Pointer
Pressure gauge/hydrometer: plastic, black
Thermometer: plastic, red

Housing
D1 – plastic (ABS), highly impact-resistant
D2 – sheet steel black

Window
Clip-in plastic with adjustable red mark

Options

- Adapter M18 x 1 to G¼
- Special scales
- Other process connections

See page 351 for prices.

11

Combined thermometer/pressure gauges / thermo-hydrometers TM

Housing types and dimensions (mm)

TM 63 ax

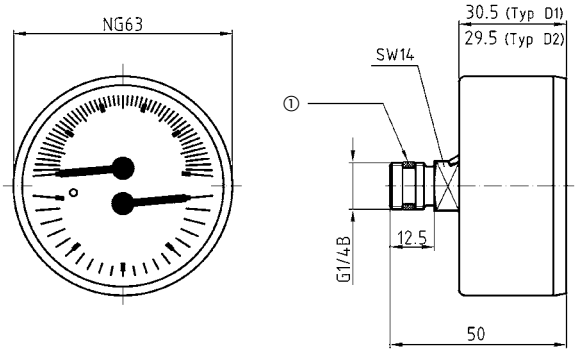

① PTFE sealing ring

TM 80 ax

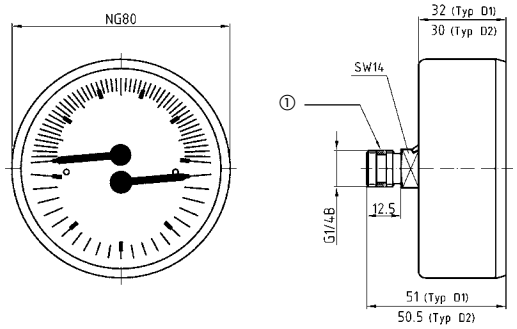

① PTFE sealing ring

TM 63 ax with mounting valve

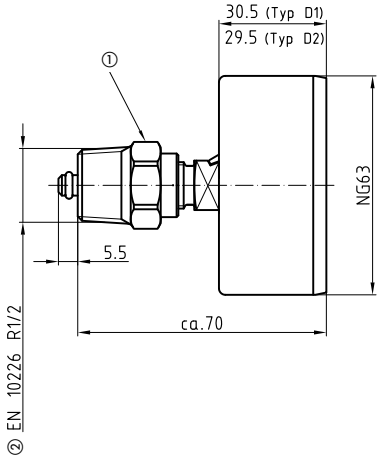

① Mounting valve
② Pipe thread

TM 80 ax with mounting valve

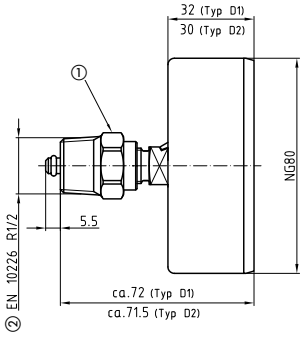

① Mounting valve
② Pipe thread

TM 80 rad

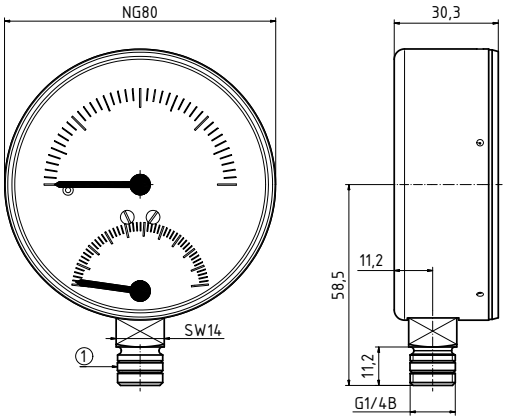

① PTFE sealing ring

Mounting valve and adapter

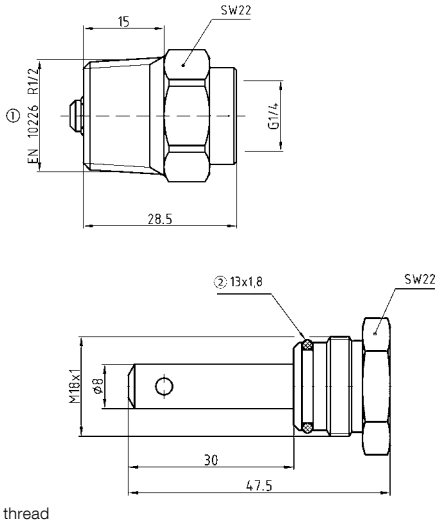

① Pipe thread
② O ring (NBR)

Combined thermometer/pressure gauges / thermo-hydrometers TM

DG: G, PG: 2

Type	TM 63, D211	TM 63, D211	TM 80, D111	TM 80, D201	TM 80, D211	TM 80, D211	TH 80, D211
Version	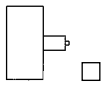	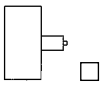	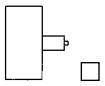	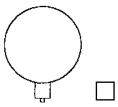	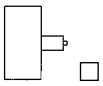	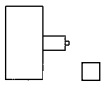	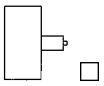
Housing Ø	63	63	80	80	80	80	80
Housing	Sheet steel, black		Plastic (ABS) highly impact resistant	Sheet steel, black	Sheet steel, black		
Accuracy class	Pressure gauge/hydrometer 2.5						
Connection	G¼B with mounting valve G¼ to R½						
Adapter	Without	With	Without	Without	Without	With	Without
Range	Part no.	Part no.	Part no.	Part no.	Part no.	Part no.	Part no.
Price €							
0/4 bar 20/120 °C	63318	**63346**	63317	**63337**	**63341**	63348	---
0/6 bar 20/120 °C	---	---	---	63338	**63342**	---	---
0/10 bar 20/120 °C	---	---	---	63339	**63343**	---	---
0/6 mWC 20/120 °C	---	---	---	---	---	---	**63311**
0/10 mWC 20/120 °C	---	---	---	---	---	---	**63312**
0/16 mWC 20/120 °C	---	---	---	---	---	---	**63313**
0/25 mWC 20/120 °C	---	---	---	---	---	---	**63314**
0/40 mWC 20/120 °C	---	---	---	---	---	---	**63315**
0/60 mWC 20/120 °C	---	---	---	---	---	---	**63316**

* Minimum order quantity for non-stock items = 100 pieces

Spare parts

DG: G, PG: 2	Part no.	**Price €**
Mounting valve G¼ to R½, brass	05 00 25 12	
Adapter G¼ to M 18 x 1, brass	05 00 40 01	

Bimetal thermometers with plastic housing for heating/plumbing applications

	BiTh 40 K with plug-on	BiTh 50 K with plastic thermowell	BiTh 63 K with brass thermowell
Application	Heating, plumbing, distribution systems, underfloor heating manifolds	Heating, plumbing, distribution systems, underfloor heating manifolds	Heating, plumbing
Technical specifications	**Nominal size** 40 **Measuring element** Bimetal spiral **Ranges** 0/60 °C **Application area** Full scale value **Operating pressure** No pressure	**Nominal size** 50 **Measuring element** Bimetal helix **Ranges** 0/60 °C **Application area** Full scale value **Operating pressure at thermowell** Max. 6 bar	**Nominal size** 63 – 80 – 100 **Measuring element** Bimetal helix **Ranges** -20/+60, 0/60, 0/120 °C **Application area** Full scale value **Operating pressure at thermowell** Max. 6 bar
Standard version	**Connection** Plastic, plug-on, Ø 15 mm, no thermowell **Mounting position** Centre back **Dial** Plastic, white – dial marking black **Pointer** Plastic, black **Housing** ABS, white **Window** Clip-on plastic	**Connection** Stem plastic, Ø 9 mm, thermowell G½B, plastic, removable **Mounting position** Centre back **Dial** Plastic, white – dial marking black **Pointer** Plastic, black **Housing** ABS, white **Window** Clip-in plastic	**Connection** Stem plastic, brass or aluminium, Ø 9 mm, thermowell G½B, brass, removable, stem length 40 mm or thread, self-sealing, with PTFE sealing ring **Mounting position** Centre back (NG 63 bottom back optional) **Dial** Plastic, white – dial marking black **Pointer** Plastic, black **Housing** ABS, black **Window** Clip-in plastic

11

i
See page 354 for prices.

Bimetal thermometers for heating and plumbing applications

Housing types and dimensions (mm)

Centre back connection, NG 40

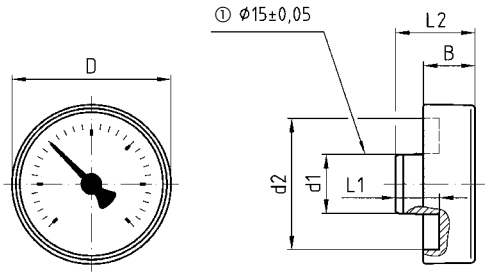

① Mounting hole

Centre back connection, NG 50

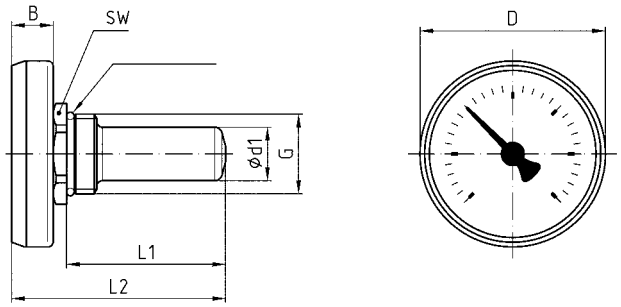

Centre back connection, NG 63 – 80 – 100

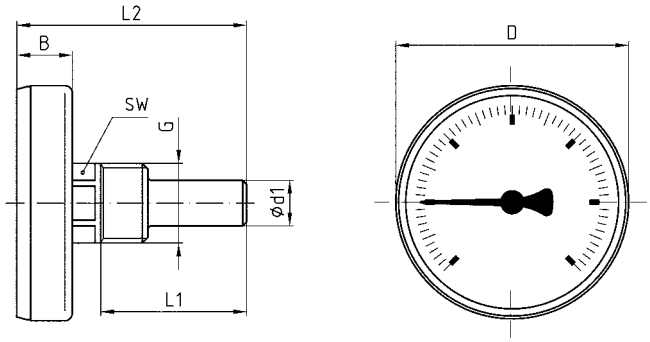

Bottom back connection, NG 63

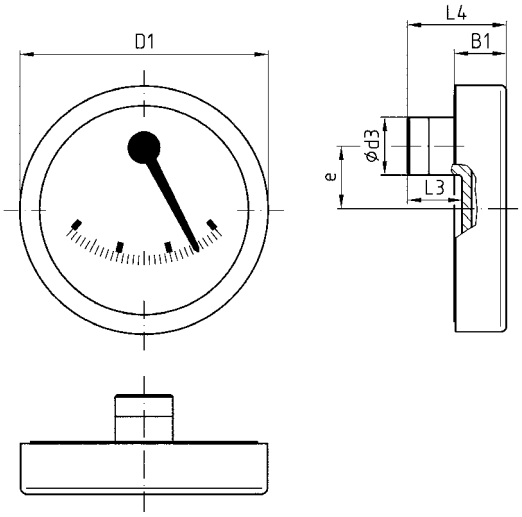

Dimensions (mm)

Nominal size (NG)	B	B_1	D	D_1	d_1	d_2	d_3	e	G	L1	L_2	L_3	L_4	SW
40	13	–	40	–	14.8	33	–	–	–	11	50	–	–	–
50	11	–	49	–	14	–	–	–	G½B	42	56.5	–	–	24
63	14.7	13	62	63.5	12	–	15	16	G½B	40/63/100/ 150/200	61/85/122/ 172/222	14	25	19
80	14.8	–	79	–	12	–	–	–	G½B			–	–	19
100	15	–	100	–	12	–	–	–	G½B			–	–	19

Bimetal thermometers for heating and plumbing applications

DG: G, PG: 1					DG: G, PG: 2					
Type	BiTh 40 K		BiTh 50 K		BiTh 63 K		BiTh 80 K		BiTh 100 K	
Version			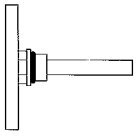		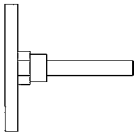		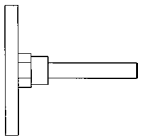		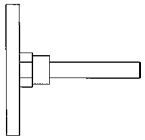	
Housing Ø	40		50		63		80		100	
Housing	Plastic (ABS), white				Plastic (ABS), black, window (plastic clip-in)					
Stem	Plastic, Ø 15 mm		Plastic, Ø 9 mm		Plastic, brass or aluminium, Ø 9 mm					
Connection	Plastic, plug-on, no thermowell		Thermowell G½B, plastic		Thermowell G½B, brass, Ø 12 mm outside, removable					
Accuracy class	Class 2 as per EN 13190									
Range (bar)	-20/+60 °C		-20/+60 °C		-20/+60 °C		-20/+60 °C		-20/+60 °C	
Stem length		PU*		PU*	**Price €** Part no.	PU*	**Price €** Part no.	PU*	**Price €** Part no.	PU*
40 mm	---		---		**63763**	100	**63776**	100	**63676**	50
63 mm	---		---		**63769**	100	**63777**	100	**63677**	50
100 mm	---		---		63770	100	63778	50	**63678**	50
150 mm	---		---		63771	50	63779	40	63679	25
Range	0/60 °C		0/60 °C		0/60 °C		0/60 °C		0/60 °C	
Stem length	**Price €** Part no.		**Price €** Part no.		**Price €** Part no.		**Price €** Part no.		**Price €** Part no.	
40 mm	64066 (See drawing for stem)	100	63749	100	**63760**	100	**63765**	100	**63698**	50
63 mm			---		**63761**	100	63766	100	**63699**	50
100 mm	---		---		63762	100	63767	50	**63700**	50
150 mm	---		---		63764	50	63768	40	63701	52
Range	0/120 °C		0/120 °C		0/120 °C		0/120 °C		0/120 °C	
Stem length	**Price €** Part no.		**Price €** Part no.		**Price €** Part no.		**Price €** Part no.		**Price €** Part no.	
40 mm with PTFE sealing ring	---		----		**63702**	100	**63706**	100	**63684**	50
40 mm	---		---		**63704**	100	**63708**	100	**63997**	50
63 mm	---		---		**63710**	100	**63715**	100	**63695**	50
100 mm	---		---		**63711**	100	**63716**	50	**63696**	50
150 mm	---		---		**63714**	50	**63717**	40	**63697**	25
200 mm	---		---		---				**63671**	10

* Minimum order quantity for non-stock items 1 PU (packing unit); delivery only in packing units.

Spare thermowells

Connection G½B, brass			
Stem length	PG	Part no.	**Price**
40 mm with PTFE sealing ring	2	**63685**	
40 mm	2	**63856**	
63 mm	2	**63686**	
100 mm	2	**63687**	
150 mm	2	**63688**	

Bimetal standard thermometers/surface mount thermometers/flue gas thermometers

	Bimetal standard thermometers	Surface mount thermometer ATh	Flue gas-thermometer RT / flue gas temperature controller RTC
Application	Heating, plumbing	Heating, ventilation and plumbing. Fastening by means of spring (ATh Ø F), magnet (ATh Ø M) or universal clamp (ATh Ø S)	Flue gas thermometer RT and flue gas temperature controller RTC for gas and oil fired systems
Technical specifications	**Nominal size** 50 – 63 – 80 – 100 **Measuring element** Bimetal helix **Accuracy class** 2 (EN 13190) **Ranges °C** -20/+60, 0/60, 0/120, 0/160 **Application area** Full scale value **Operating pressure at thermowell** Max. 6 bar	**Nominal size** 63 – 80 **Measuring element** Bimetal spiral **Ranges °C** -20/+40, 0/60, 0/120 **Application area** Full scale value	**Nominal size** 80 **Measuring element** Bimetal helix **Ranges °C** RT: 0/300, 0/500 RTC: 0/350 **Application area** Full scale value
Standard version	**Connection** Stem plastic, brass or aluminium, Ø 9 mm Thermowell G½B, brass, removable (160 °C and higher with locking screw) **Mounting position** NG 50 – 63 – 80 – 100 NG 63 – 80 – 100 bottom **Dial** Up to 120 °C plastic, greater than 160 °C aluminium, white Dial marking black **Pointer** Plastic, black **Housing** Sheet steel galvanised **Push on bezel** Sheet steel nickel-plated **Window** Plastic	**Connection** ATh Ø F: With heat-conducting element and universal clamp; ATh Ø S with universal clamp for pipes ⅜" to 1½". ATh Ø M: 2 x magnet Ø 20 mm **Mounting position** NG 63 – 80 centre back **Dial** Plastic, white; dial marking black **Pointer** Plastic, black **Housing** ATh Ø F: Sheet steel, galvanised ATh Ø M: Plastic, black ATh Ø S: Sheet steel, galvanised **Push on bezel** Sheet steel nickel-plated **Window** Plastic	**Connection** RT: Stem stainless steel 316 L, plain, with adjustable cone, brass RTC: Stem stainless steel 316 L, plain, with ring magnet bracket **Mounting position:** centre back **Dial** Aluminium, grey – dial marking black; RTC with green and red reference zones **Pointer** Aluminium, black RTC with additional max. pointer, red **Housing** Sheet steel galvanised **Push on bezel** Sheet steel nickel-plated **Window** Plastic
Options	▪ Other ranges ▪ Nominal size 34, 160	▪ Other ranges ▪ Plastic housing	

11

i

See page 357 for prices.

Bimetal standard thermometers/surface mount thermometers/flue gas thermometers

Housing types and dimensions (mm)

Bimetal standard thermometers
Centre back connection

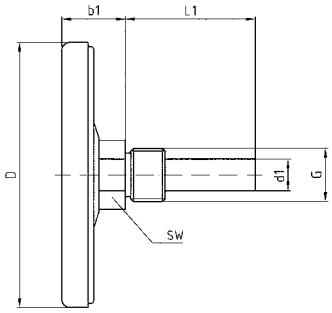

Bimetal standard thermometers
Bottom connection

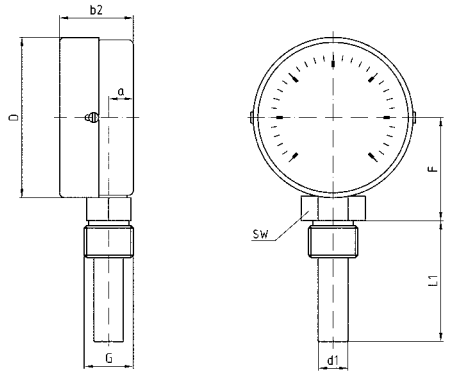

Surface mount thermometer, centre back connection,
with fastening springs

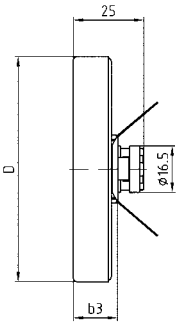

with magnets

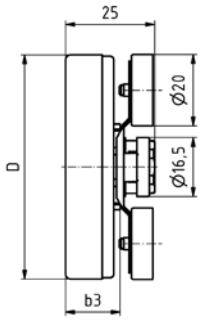

Surface mount thermometers
Centre back connection, with universal clamp for pipes
3/8" to 1½"

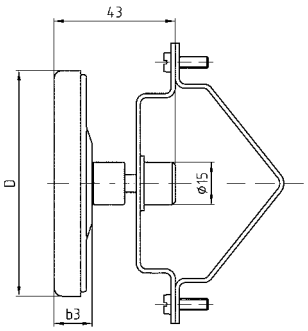

Flue gas thermometers RT
Centre back connection

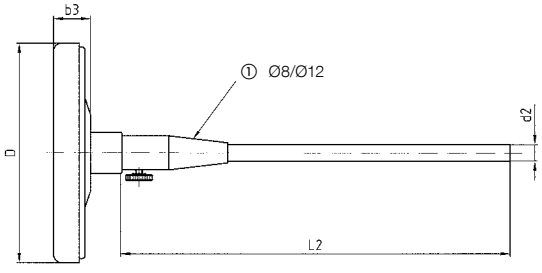

① For hole

Flue gas temperature controller RTC
Centre back connection

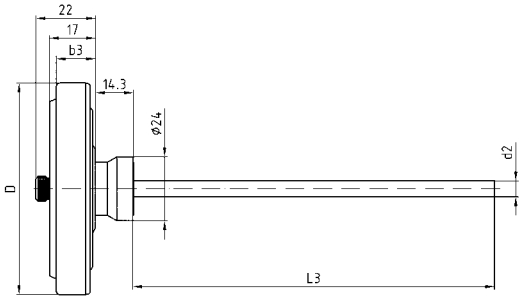

Dimensions (mm)

Nominal size (NG)	a	b1	b2	b3	D	d1	d2	F	G	L1	L2	L3	SW
50	–	18	–	–	50	12	–	–	G½B	40	141	86	19/22
63	10	20	35	15	63	12	-	29.3	G½B	63	191	136	19/22
80	10	21	33	15	80	12	6	47.3	G½B	100	291		19/22
100	10	23.7	40.5	–	100	12	–	59.3	G½B	150			19/22

Bimetal standard thermometers

DG: G, PG: 2

Type	BiTh 50 ST	BiTh 63 ST	BiTh 80 ST	BiTh 100 ST
Version	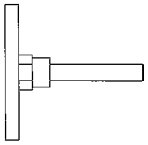	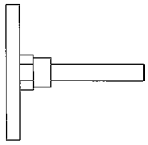	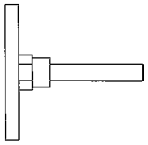	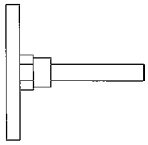
Housing Ø	50	63	80	100
Housing	Sheet steel galvanised, push on bezel nickel-plated, plastic window			
Stem	Plastic, brass or aluminium, Ø 9 mm			
Connection	Thermowell G½B, brass, Ø 12 mm outside, removable*			
Accuracy class	Class 2 as per EN 13190			
Range	-20/+60 °C	-20/+60 °C	-20/+60 °C	-20/+60 °C
Stem length		**Price €** Part no.	**Price €** Part no.	**Price €** Part no.
40 mm	---	**63951**	**63955**	**63959**
63 mm	---	**63952**	**63956**	**63960**
100 mm	---	63953	63957	**63961**
150 mm	---	63954	63958	**63962**
Range	0/60 °C	0/60 °C	0/60 °C	0/60 °C
Stem length	**Price €** Part no.	**Price €** Part no.	**Price €** Part no.	**Price €** Part no.
40 mm	**64027B**	**63860**	**63865**	63869
63 mm	64028B	63861	63866	63870
100 mm	64029B	63862	63867	**63871**
150 mm	64030B	63864	63868	**63872**
Range	0/120 °C	0/120 °C	0/120 °C	0/120 °C
Stem length	**Price €** Part no.	**Price €** Part no.	**Price €** Part no.	**Price €** Part no.
40 mm	**64031B**	**63801**	**63806**	**63811**
63 mm	64032B	**63802**	**63807**	**63812**
100 mm	64033B	**63803**	**63808**	**63813**
150 mm	64034B	**63804**	**63809**	**63814**
200 mm	---	---	63842	**63815**
Range	0/160 °C	0/160 °C**	0/160 °C**	0/160 °C**
Stem length		**Price €** Part no.	**Price €** Part no.	**Price €** Part no.
40 mm	---	**63983*** **	63987	64015
63 mm	---	63984	63988	64016
100 mm	---	63985	63989	64017
150 mm	---	63986	63990	64018

Minimum order quantity for non-stock items = 25 pieces.
* NG 50 with O ring clamp connection
** 160 °C and higher = Thermowell with locking screw
*** Dial red = Part no. **63674**; extra charge € / Dial blue = Part no. **63675**; extra charge €

Bimetal standard thermometers

DG: H, PG: 2

Type	BiTh 63 ST	BiTh 80 ST	BiTh 100 ST
Version	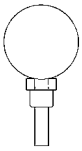	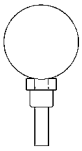	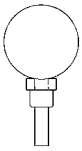
Housing Ø	63	80	100
Housing	Sheet steel galvanised, push on bezel nickel-plated, plastic window		
Stem	Brass or aluminium, Ø 9 mm		
Connection	Thermowell G½B, brass, Ø 12 mm outside, removable		
Accuracy class	Class 2 as per EN 13190		
Range	-20/+60 °C	-20/+60 °C	-20/+60 °C
Stem length	**Price €** Part no.	**Price €** Part no.	**Price €** Part no.
40 mm	64039	**64055**	64073
63 mm	64040	64056	64074
100 mm	64041	64057	64075
150 mm	64042	64058	64076
Range	0/60 °C	0/60 °C	0/60 °C
Stem length	**Price €** Part no.	**Price €** Part no.	**Price €** Part no.
40 mm	64043	64059	64077
63 mm	64044	64060	64078
100 mm	64045	64061	64079
150 mm	64046	64062	64080
Range	0/120 °C	0/120 °C	0/120 °C
Stem length	**Price €** Part no.	**Price €** Part no.	**Price €** Part no.
40 mm	**64047**	**64063**	**64081**
63 mm	**64048**	**64064**	**64082**
100 mm	64049	64067	**64083**
150 mm	64050	64068	**64084**

Minimum order quantity for non-stock items = 10 pieces.

Spare thermowells

DG: G, PG: 2

Connection G½B, brass (only for bottom connection)		
Stem length	Part no.	**Price €**
40 mm	**63850**	
63 mm	**63851**	
100 mm	**63852**	
150 mm	**63853**	

Surface mount thermometers/eccentric thermometers

DG: G, PG: 3

Type	ATh 63 S	ATh 63 F*	ATh 80 F*	ATh 63 M	ATh 80 M	BiTh 63 exz
Version	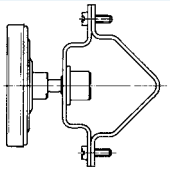	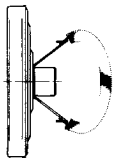	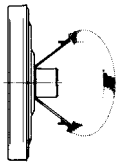	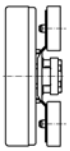	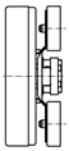	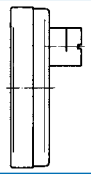
Housing Ø	63	63	80	63	80	63
Housing	Sheet steel galvanised, push on bezel nickel-plated, plastic window			Plastic, black, push on bezel nickel-plated, plastic window		Plastic
Connection	Universal clamp for pipes ⅜" to 1½"	Heat-conducting element with fastening spring for pipes ⅜" to 1½"		2 x magnet Ø 20 mm		Eccentric male connector Ø 15 mm
Accuracy class	Class 2 as per EN 13190					
Range	0/120 °C	0/120 °C	0/120 °C	0/120 °C	0/120 °C	20/100 °C
	Price € Part no.	**Price €** Part no.	**Price €** Part no.	**Price €** Part no.	**Price €** Part no.	**Price €** Part no.
Dial black	**63820**	**63822**	**63821**	**63651**	**63653**	68895
Dial red	---	---	---	---	---	**63920**
Dial blue	---	---	---	---	---	**63921**
Range	0/60 °C	0/60 °C	0/60 °C	0/60 °C	0/60 °C	0/60 °C
	---	**63826**	63943	**63650**	**63652**	---
Range	---	-20/+40 °C	---	---	---	---
	---	**64339**	---	---	---	---

*ATh 63 F/ATh 80 F are also available with plastic housing.

Flue gas thermometers/flue gas temperature controllers

DG: G, PG: 3

Type	RT 80	RT 80	RTC 80
Version	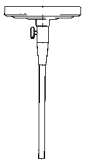	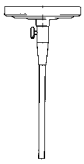	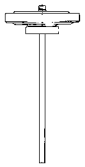
Housing Ø	80	80	80
Housing	Sheet steel galvanised, push on bezel nickel-plated, plastic window		
Connection	Plain stem Stainless steel 316 L Adjustable cone Brass, nickel-plated 8 – 12 mm	Plain stem Stainless steel 316 L Adjustable cone Stainless steel 12 – 18 mm	Plain stem stainless steel 316, magnet
Accuracy class	Class 2 as per EN 13190		
Range	0/300 °C	0/500 °C	0/500 °C	0/350 °C
Stem length	**Price €** Part no.	**Price €** Part no.	**Price €** Part no.	**Price €** Part no.
100 mm	---	---	---	**63833**
150 mm	**64238**	**63830**	**64164**	**63832**
300 mm	**64239**	**63831**	---	---

Bimetal thermometers for industrial applications
Bimetal air duct thermometers

	Bimetal thermometers for industrial applications	Bimetal air duct thermometers
Technical specifications	Mechanical engineering, plant engineering, pipelines, boilers, heating technology	Air conditioning, ventilation
	Type D2	**Type** D2
	Nominal size 63 – 80 – 100 – 160	**Nominal size** 63 – 80 – 100
	Measuring element Bimetal helix	**Measuring element** Bimetal helix
	Accuracy class 1 (EN 13190)	**Accuracy class** 2 (EN 13190)
	Ranges °C -20/+60, 0/60, 0/120, 0/160	**Ranges °C** -30/+50, -20/+60, -20/+40, 0/60
	Application area (EN 13190) Continuous load: measuring range Short-term: range	**Application area** Full scale value
	Operating pressure at thermowell Max. 10 bar (statical)	**Degree of protection** IP 41 (EN 60529)
	Degree of protection IP 41 (EN 60529)	
Standard version	**Connection** Stem brass, Ø 9 mm Thermowell G½B, brass, removable	**Connection** Stem brass, Ø 9 mm, mounting flange, plastic Ø 60 mm, or back flange, steel
	Mounting position NG 63 – 80 – 100 – 160 centre back NG 63 – 80 – 100 – 160 bottom	**Mounting position** NG 63 – 80 – 100 centre back
	Dial Aluminium, white, Dial marking black	**Dial** Aluminium, white, Dial marking black
	Pointer Aluminium, black	**Pointer** Plastic, black
	Housing Sheet steel galvanised	**Housing** Sheet steel galvanised
	Push on bezel Sheet steel nickel-plated	**Push on bezel** Sheet steel nickel-plated
	Window Instrument glass	**Window** Version LKF: Plastic Version LKB: Instrument glass
Options	▪ Other connection types ▪ Other ranges ▪ Other stem lengths	▪ Other ranges ▪ Other stem lengths ▪ Accuracy class 1 ▪ Steel flange Ø 40/80 mm

11

i

See page 362 for prices.

Bimetal thermometers for industrial applications/ Bimetal air duct thermometers

Housing types and dimensions (mm)

Bimetal thermometers for industrial applications
Centre back connection

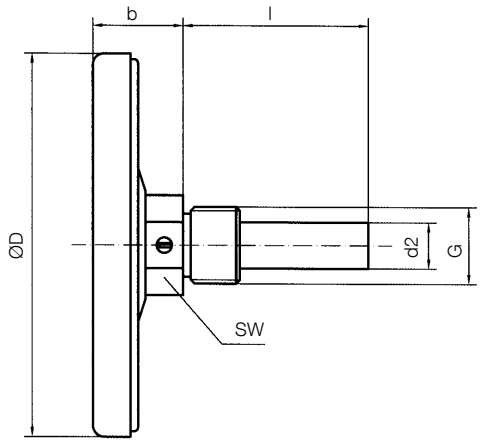

Bottom connection

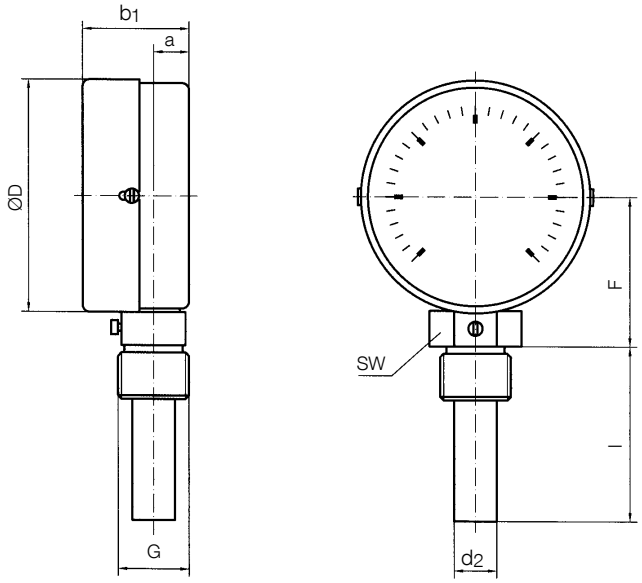

Bimetal air duct thermometers
Centre back connection

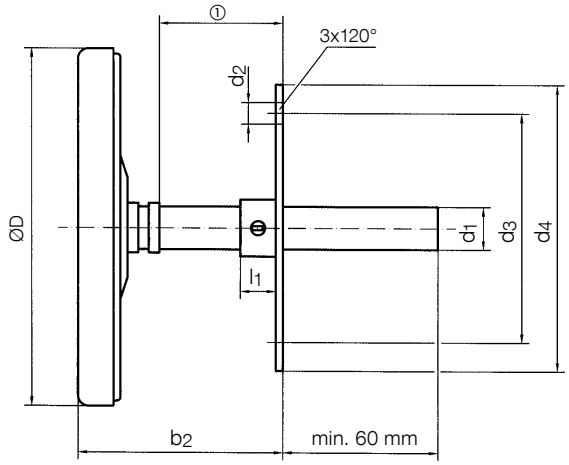

① Adjustable

Dimensions (mm)

Nominal size (NG)	a	b	b1	b2	D	d1	d2	d3	d4	F	G	l	l1	SW
63	10	24	34	Adjustable	63	9	12	51	60	43.5	G½B	40	10	22
80	10	24	36		80	9	12	51	60	52	G½B	63	10	22
100	10	26	36		100	9	12	51	60	62	G½B	100	10	22
160	-	32	37		160	-	-	-	-	92	G½B	150	-	22

Bimetal thermometers for industrial applications

DG: H, PG: 2

Type	BiTh 63 I D211	BiTh 80 I D211	BiTh 100 I D211	BiTh 160 I D211
Version	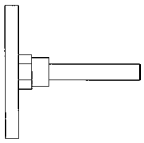	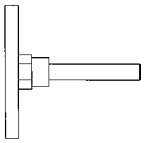	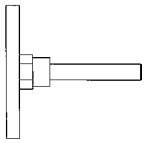	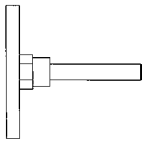
Housing Ø	63	80	100	160
Housing	Sheet steel galvanised, push on bezel nickel-plated, instrument glass window			
Stem	Brass, Ø 9 mm			
Connection	Thermowell G½B, brass, Ø 12 mm outside, removable			
Accuracy class	Class 1 as per EN 13190			
Range	-20/+60 °C	-20/+60 °C	-20/+60 °C	-20/+60 °C
Stem length	**Price €** Part no.	**Price €** Part no.	**Price €** Part no.	**Price €** Part no.
40 mm	65106211	65206211	65306211	65406211
63 mm	65107211	65207211	**65307211**	65407211
100 mm	65108211	65208211	**65308211**	65408211
150 mm	65109211	65209211	65309211	65409211
Range	0/60 °C	0/60 °C	0/60 °C	0/60 °C
Stem length	**Price €** Part no.	**Price €** Part no.	**Price €** Part no.	**Price €** Part no.
40 mm	**65131211**	65231211	65331211	65431211
63 mm	**65132211**	**65232211**	**65332211**	65432211
100 mm	65133211	65233211	**65333211**	65433211
150 mm	65134211	**65234211**	65334211	65434211
Range	0/120 °C	0/120 °C	0/120 °C	0/120 °C
Stem length	**Price €** Part no.	**Price €** Part no.	**Price €** Part no.	**Price €** Part no.
40 mm	**65146211**	65246211	65346211	65446211
63 mm	**65147211**	**65247211**	**65347211**	65447211
100 mm	**65148211**	**65248211**	**65348211**	65448211
150 mm	65149211	**65249211**	**65349211**	65449211
Range	0/160 °C	0/160 °C	0/160 °C	0/160 °C
Stem length	**Price €** Part no.	**Price €** Part no.	**Price €** Part no.	**Price €** Part no.
40 mm	65151211	65251211	65351211	65451211
63 mm	65152211	65252211	**65352211**	65452211
100 mm	65153211	65253211	65353211	65453211
150 mm	65154211	65254211	65354211	65454211

Minimum order quantity for non-stock items = 10 pieces

Bimetal thermometers for industrial applications

DG: H, PG: 2

Type	BiTh 63 I D201	BiTh 80 I D201	BiTh 100 I D201	BiTh 160 I D201
Version	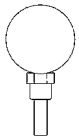	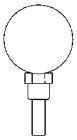	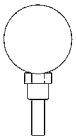	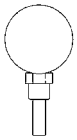
Housing Ø	63	80	100	160
Housing	Sheet steel galvanised, push on bezel nickel-plated, instrument glass window			
Stem	Brass, Ø 9 mm			
Connection	Thermowell G½B, brass, Ø 12 mm outside, removable			
Accuracy class	Class 1 as per EN 13190			
Range	-20/+60 °C	-20/+60 °C	-20/+60 °C	-20/+60 °C
Stem length	**Price €** Part no.	**Price €** Part no.	**Price €** Part no.	**Price €** Part no.
40 mm	65106201	65206201	65306201	65406201
63 mm	65107201	65207201	65307201	65407201
100 mm	65108201	65208201	65308201	65408201
150 mm	65109201	65209201	65309201	65409201
Range	0/60 °C	0/60 °C	0/60 °C	0/60 °C
Stem length	**Price €** Part no.	**Price €** Part no.	**Price €** Part no.	**Price €** Part no.
40 mm	65131201	65231201	65331201	65431201
63 mm	65132201	65232201	65332201	65432201
100 mm	65133201	65233201	65333201	65433201
150 mm	65134201	65234201	65334201	65434201
Range	0/120 °C	0/120 °C	0/120 °C	0/120 °C
Stem length	**Price €** Part no.	**Price €** Part no.	**Price €** Part no.	**Price €** Part no.
40 mm	65146201	65246201	65346201	65446201
63 mm	65147201	65247201	65347201	65447201
100 mm	65148201	65248201	65348201	65448201
150 mm	65149201	65249201	65349201	65449201
Range	0/160 °C	0/160 °C	0/160 °C	0/160 °C
Stem length	**Price €** Part no.	**Price €** Part no.	**Price €** Part no.	**Price €** Part no.
40 mm	65151201	65251201	65351201	65451201
63 mm	65152201	65252201	65352201	65452201
100 mm	65153201	65253201	65353201	65453201
150 mm	65154201	65254201	65354201	65454201

Bimetal air duct thermometers

DG: H, PG: 2

Type	BiTh 63 LKF D211	BiTh 80 LKF D211	BiTh 100 LKF D211	BiTh 63 LKB D271	BiTh 80 LKB D271	BiTh 100 LKB D271
Version	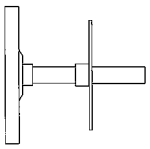	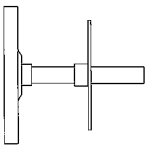	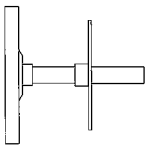	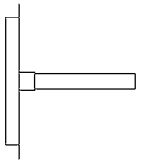	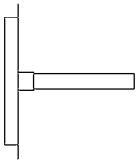	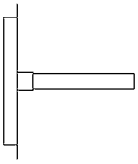
Housing Ø	63	80	100	63	80	100
Housing	Sheet steel galvanised, push on bezel nickel-plated, plastic window			Sheet steel galvanised, push on bezel nickel-plated, with back flange Instrument glass window		
Stem	Brass, Ø 9 mm					
Connection	Flange, plastic, Ø 60 mm			plain		
Accuracy class	Class 2 as per EN 13190					
Range	-30/+50 °C	-30/+50 °C	-30/+50 °C	-30/+50 °C	-30/+50 °C	-30/+50 °C
Stem length	**Price €** Part no.	**Price €** Part no.	**Price €** Part no.	**Price €** Part no.	**Price €** Part no.	**Price €** Part no.
100 mm	65613211	65713211	65813211	65613271	65713271	65813271
150 mm	65614211	65714211	**65814211**	65614271	65714271	65814271
200 mm	65615211	65715211	**65815211**	65615271	65715271	65815271
Range	-20/+60 °C	-20/+60 °C	-20/+60 °C	-20/+60 °C	-20/+60 °C	-20/+60 °C
Stem length	**Price €** Part no.	**Price €** Part no.	**Price €** Part no.	**Price €** Part no.	**Price €** Part no.	**Price €** Part no.
100 mm	65608211	65708211	65808211	65608271	65708271	65808271
150 mm	65609211	65709211	**65809211**	65609271	65709271	65809271
200 mm	65610211	65710211	**65810211**	65610271	65710271	65810271
Range	-20/+40 °C	-20/+40 °C	-20/+40 °C	-20/+40 °C	-20/+40 °C	-20/+40 °C
Stem length	**Price €** Part no.	**Price €** Part no.	**Price €** Part no.	**Price €** Part no.	**Price €** Part no.	**Price €** Part no.
100 mm	65623211	65723211	65823211	65623271	65723271	65823271
150 mm	65624211	65724211	65824211	65624271	65724271	65824271
200 mm	65625211	65725211	65825211	65625271	65725271	65825271
Range	0/60 °C	0/60 °C	0/60 °C	0/60 °C	0/60 °C	0/60 °C
Stem length	**Price €** Part no.	**Price €** Part no.	**Price €** Part no.	**Price €** Part no.	**Price €** Part no.	**Price €** Part no.
100 mm	65633211	65733211	65833211	65633271	65733271	65833271
150 mm	65634211	65734211	**65834211**	65634271	65734271	65834271
200 mm	65635211	65735211	**65835211**	65635271	65735271	65835271

Minimum order quantity for non-stock items = 10 pieces

Bimetal stainless steel thermometers

- **Suitable for use in mechanical or plant engineering**
- **Accuracy class 1 as per EN 13190**
- **For temperatures of the medium of up to 160 °C**

With adapter ring for thermowell Ø 18 mm

Application

For corrosive media. Suitable for a great variety of industrial applications.

Technical specifications

Type: D3

Nominal size: 63 – 80 – 100

Measuring element: Bimetal helix

Accuracy class: 1 (EN 13190)

Ranges °C
-20/+60, 0/60, 0/120, 0/160

Application area (EN 13190)
Continuous load: measuring range
Short-term: range

Operating pressure at thermowell
Max. 6 bar

Degree of protection: IP 43 (EN 60529)

Standard version

Connection
Stem stainless steel 316 L, Ø 8 mm, plain

Adapter ring
Plastic, for thermowells with connection collar Ø 14, 18 mm
(only for axial mounting position up to max. 120 °C)

Mounting position
NG 63 – 80 – 100 centre back
NG 63 – 100 bottom

Dial
Aluminium, white – Dial marking black

Pointer: Aluminium, black
Housing and push on bezel: Stainless steel 304

Window: Instrument glass

Options

- Thermowell G½B, stainless steel 316 Ti/316 L
- Other connection designs
- Other ranges
- Other stem lengths

11

See pages 367 for prices.

Bimetal stainless steel thermometers

Housing types and dimensions (mm)

Bimetal stainless steel thermometers – centre back connection

Plain stem (standard):

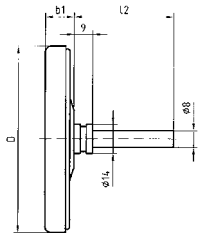

Separate thermowell (option):

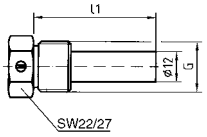

Fixed male connection (option):

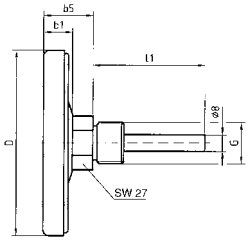

Bimetal stainless steel thermometers – bottom connection

Plain stem (standard):

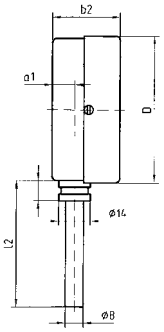

Fixed male connection (option):

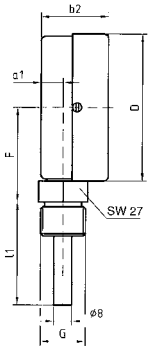

Separate thermowell (option):

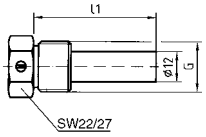

Dimensions (mm)

Nominal size (NG)	D	a1	a2	b1	b2	b3	b4	b5	b6	F	F1	G	l1	l2
63	63	10	15.5	15	34	32	45	27	62	46.5	58.5	G½B	40	49
80	80	-	-	15	-	-	-	28	-	-	-	G½B	63 100	67 104
100	100	10	17.5	17	36	27.5	49.5	29	57.5	65	77.5	G½B	150	154

11

Bimetal stainless steel thermometers

DG: H, PG: 3

Type	BiTh 63 E D312	BiTh 80 E D312	BiTh 100 E D312	BiTh 63 E D302	BiTh 100 E D302
Version	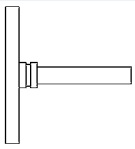	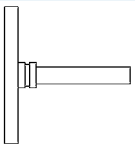	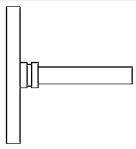	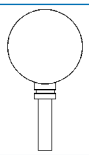	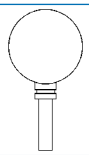
Housing Ø	63	80	100	63	100
Housing	Stainless steel 304 with push on bezel 304, instrument glass window				
Stem	Stainless steel 316, Ø 8 mm				
Connection	Plain stem (without thermowell)				
Accuracy class	Class 1 as per EN 13190				
Range	-20/+60 °C	-20/+60 °C	-20/+60 °C	-20/+60 °C	-20/+60 °C
For thermowell with stem length L1	**Price €** Part no.	**Price €** Part no.	**Price €** Part no.	**Price €** Part no.	**Price €** Part no.
63 mm	66107312	66207312	**66307312**	66107302	66307302
100 mm	66108312	66208312	**66308312**	66108302	66308302
150 mm	66109312	66209312	**66309312**	66109302	66309302
200 mm	66110312	66210312	66310312	66110302	66310302
Range	0/60 °C	0/60 °C	0/60 °C	0/60 °C	0/60 °C
For thermowell with stem length L1	**Price €** Part no.	**Price €** Part no.	**Price €** Part no.	**Price €** Part no.	**Price €** Part no.
63 mm	66132312	66232312	**66332312**	66132302	66332302
100 mm	66133312	66233312	**66333312**	66133302	66333302
150 mm	66134312	66234312	**66334312**	66134302	66334302
200 mm	66135312	66235312	66335312	66135302	66335302
Range	0/120 °C	0/120 °C	0/120 °C	0/120 °C	0/120 °C
For thermowell with stem length L1	Price € Part no.	**Price €** Part no.	**Price €** Part no.	**Price €** Part no.	**Price €** Part no.
40 mm	**66146312**	**66246312**	**66346312**	---	---
63 mm	**66147312**	**66247312**	**66347312**	66147302	66347302
100 mm	**66148312**	**66248312**	**66348312**	66148302	66348302
150 mm	**66149312**	**66249312**	**66349312**	66149302	66349302
200 mm	66150312	66250312	**66350312**	66150302	66350302
Range	0/160 °C	0/160 °C	0/160 °C	0/160 °C	0/160 °C
For thermowell with stem length L1	**Price €** Part no.	**Price €** Part no.	**Price €** Part no.	**Price €** Part no.	**Price €** Part no.
63 mm	66152312	66252312	66352312	66152302	66352302
100 mm	66153312	66253312	66353312	66153302	66353302
150 mm	66154312	66254312	66354312	66154302	66354302
200 mm	66155312	66255312	66355312	66155302	66355302

Minimum order quantity for non-stock items = 10 pieces

Blue part no. = in-stock items

i

* See page 369 for other connection types, options/extra charges.

Bimetal stainless steel thermometers with fixed connection thread

DG: H, PG: 3

Type	BiTh 63 E D312	BiTh 80 E D312	BiTh 100 E D312
Version	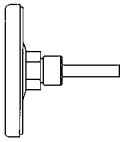	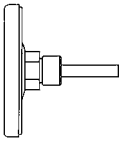	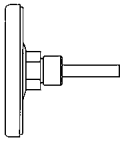
Housing Ø	63	80	100
Housing	Stainless steel 304 with push on bezel 304, instrument glass window		
Stem	Stainless steel 316, Ø 8 mm		
Connection	Fixed male connection, G½B**		
Accuracy class	Class 1 as per EN 13190		
Range	0/60 °C	0/60 °C	0/60 °C
Stem length L1*	**Price €** Part no.	**Price €** Part no.	**Price €** Part no.
63 mm	66132312AFG4D8	66232312AFG4D8	**66332312AFG4D8**
100 mm	66133312AFG4D8	66233312AFG4D8	**66333312AFG4D8**
150 mm	66134312AFG4D8	66234312AFG4D8	**66334312AFG4D8**
200 mm	66135312AFG4D8	66235312AFG4D8	66335312AFG4D8
Range	0/120 °C	0/120 °C	0/120 °C
Stem length L1*	Price € Part no.	**Price €** Part no.	**Price €** Part no.
63 mm	**66147312AFG4D8**	**66247312AFG4D8**	**66347312AFG4D8**
100 mm	**66148312AFG4D8**	**66248312AFG4D8**	**66348312AFG4D8**
150 mm	**66149312AFG4D8**	**66249312AFG4D8**	**66349312AFG4D8**
200 mm	66150312AFG4D8	66250312AFG4D8	**66350312AFG4D8**
Range	0/200 °C	0/200 °C	0/200 °C
Stem length L1*	**Price €** Part no.	**Price €** Part no.	**Price €** Part no.
63 mm	66157312AFG4D8	66257312AFG4D8	66357312AFG4D8
100 mm	66158312AFG4D8	66258312AFG4D8	66359312AFG4D8
150 mm	66159312AFG4D8	66259312AFG4D8	66359312AFG4D8
200 mm	66160312AFG4D8	66260312AFG4D8	66360312AFG4D8

Minimum order quantity for non-stock items = 10 pieces

Blue part no. = in-stock items

* Maximum stem length = 300 mm
** ½–14 NPT available at no extra charge

Connection types for bimetal thermometers

(industrial, stainless steel and chemical versions)

Plain

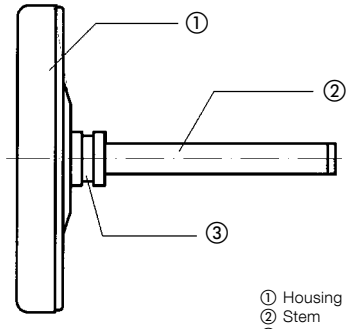

① Housing
② Stem
③ Recess for locking screw

Loose male connection

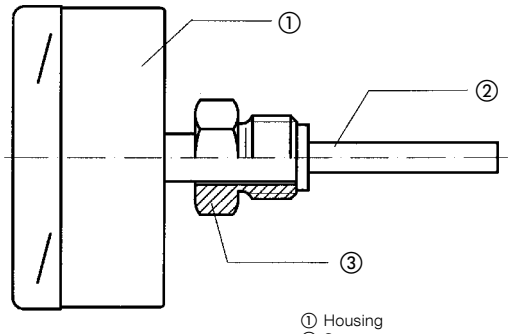

① Housing
② Stem
③ Loose connection, with thread for screw connection

Separate screw-in thermowell (with locking screw)

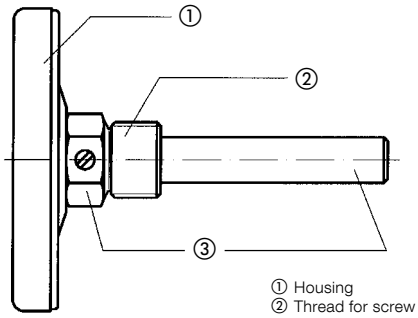

① Housing
② Thread for screw connection
③ Thermowell pushed on, fixed with locking screw

Loose union nut

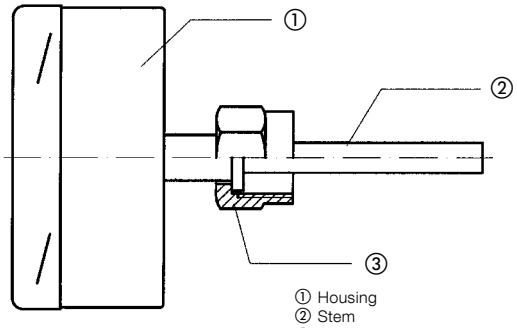

① Housing
② Stem
③ Loose union nut, with female thread

Separate weld-in thermowell (with locking screw)

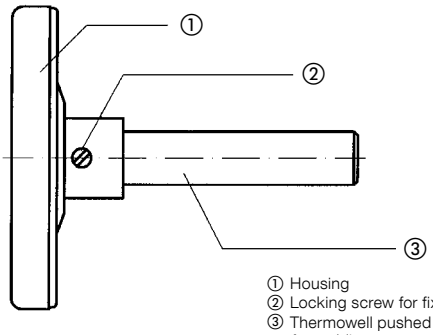

① Housing
② Locking screw for fixing.
③ Thermowell pushed on, for welding

Compression fitting, adjustable on stem

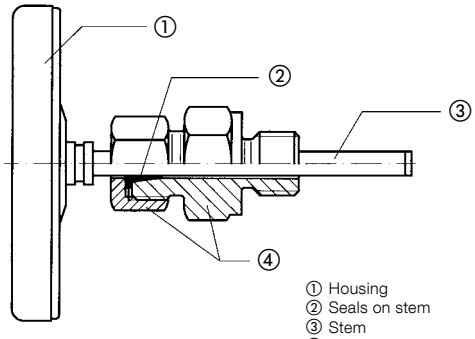

① Housing
② Seals on stem
③ Stem
④ Compression fitting adjustable

Fixed male connection

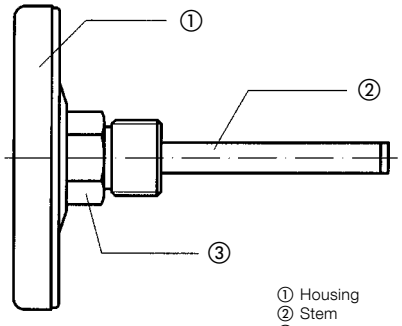

① Housing
② Stem
③ Fixed male connection, with thread for screw connection

DIN thermowell

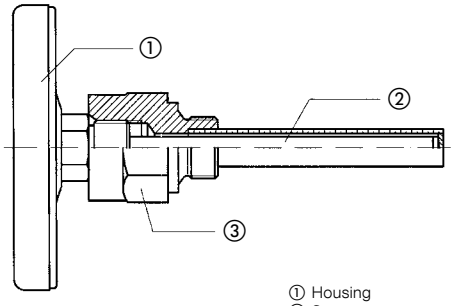

① Housing
② Stem
③ Thermowell as per DIN 43772 with thread for screw connection

i

See catalogue INDUSTRIAL TECHNOLOGY, chapter 4, for extra charges and part numbers for connection types and other ranges.

Industrial thermometers VMTh

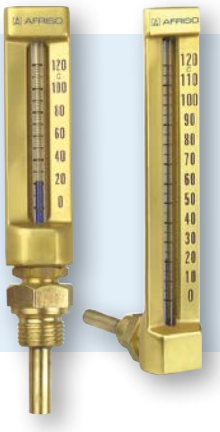

- **Extremely robust due to full metal housing**
- **Vibration-resistant glass thermometers**
- **Stainless steel version possible**
- **Excellent readability due to blue thermometer filling**

Page 377

Application

Heating, industry, mechanical engineering

Technical specifications

Nominal size
110 x 30 – 150 x 36 – 200 x 36

Upper part
Aluminium, V-shaped, polished, anodised brass-coloured. Numbers of the measuring range on the right scale side below the anodised layer, printed, black. Adjustable by means of brass nut (spanner size SW 22) so that readings from any angle are possible.

Glass insert (capillary)
Prismatic capillary, completely made of glass, Ø 6 mm. Graduation marks of the capillary burnt in, black, completely resistant.
Main graduation marks corresponding to the numbers printed on the housing are especially bold and easy to read.

Thermometer filling
Standard version: Blue liquid indicating from -60 to +200 °C.

Stem
Brass, Ø 10 mm, with fixed thread G½B.
Stainless steel version on request.

Accuracy
DIN 16195

Ranges °C
-30/+50, 0/60, 0/100, 0/120, 0/160

Mounting position
Straight
Angled 90°
Angled 135°

Stem lengths (mm)
40, 63, 100, 160

Housing types and dimensions (mm)

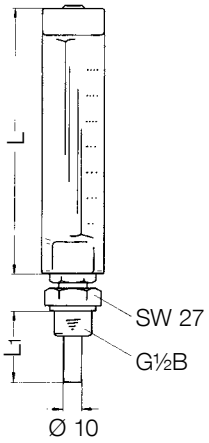

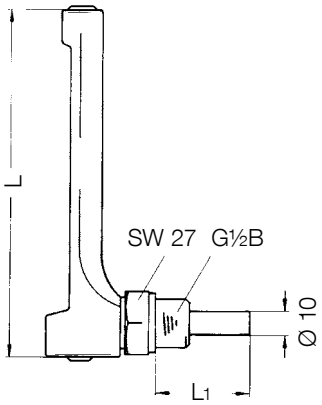

Options

- Other ranges
- Other stem lengths
- Other stem materials
- Other connection threads
- Upper part anodised aluminium-coloured
- Upper part made of plastic
- Thermowells

Type	L	L1
VMTh 110	110	40
VMTh 150	150	63
VMTh 200	200	100
		160

Industrial thermometers VMTh

DG: H, PG: 2

Type	VMTh 110	VMTh 110	VMTh 150	VMTh 150	VMTh 200	VMTh 200
Version		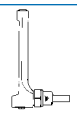				
Nominal size	110 x 30	110 x 30	150 x 36	150 x 36	200 x 36	200 x 36
DIN	16181	16182	16185	16186	16189	16190
Mounting position	Straight	Angled 90° [1]	Straight	Angled 90° [1]	Straight	Angled 90° [1]
Housing	Aluminium, anodised brass-coloured					
Stem	Brass, Ø 10 mm					
Connection	Version B with screw-in socket G½B, brass [2]					
Accuracy	As per DIN 16195					
Range	-30/+50 °C	-30/+50 °C	-30/+50 °C	-30/+50 °C	-30/+50 °C	-30/+50 °C
Stem length	**Price €** Part no.	**Price €** Part no.	**Price €** Part no.	**Price €** Part no.	**Price €** Part no.	**Price €** Part no.
40 mm	64101	64120	64136	64150	---	---
63 mm	64102	64121	64137	64151	64165	64181
100 mm	64103	64122	64138	64152	64166	64182
160 mm	64104	64123	64139	64153	64167	64183
Range	0/60 °C	0/60 °C	0/60 °C	0/60 °C	0/60 °C	0/60 °C
Stem length	**Price €** Part no.	**Price €** Part no.	**Price €** Part no.	**Price €** Part no.	**Price €** Part no.	**Price €** Part no.
40 mm	64106	64124	64140	64154	---	---
63 mm	64107	64125	64141	64155	64169	64185
100 mm	64108	64126	64142	64156	64170	64186
160 mm	64109	64127	64143	64157	64171	64187
Range	0/100 °C	0/100 °C	0/100 °C	0/100 °C	0/100 °C	0/100 °C
Stem length	**Price €** Part no.	**Price €** Part no.	**Price €** Part no.	**Price €** Part no.	**Price €** Part no.	**Price €** Part no.
40 mm	---	---	64330	64335	---	---
63 mm	---	---	64331	64336	---	---
100 mm	---	---	64332	64337	---	---
160 mm	---	---	64333	64338	---	---
Range	0/120 °C	0/120 °C	0/120 °C	0/120 °C	0/120 °C	0/120 °C
Stem length	**Price €** Part no.	**Price €** Part no.	**Price €** Part no.	**Price €** Part no.	**Price €** Part no.	**Price €** Part no.
40 mm	**64111**	**64128**	**64100**	**64110**	---	---
63 mm	**64112**	**64129**	**64105**	**64115**	64173	64189
100 mm	64113	**64130**	**64144**	**64158**	64174	64190
160 mm	64114	64131	64145	64159	64175	64191
Range	0/160 °C	0/160 °C	0/160 °C	0/160 °C	0/160 °C	0/160 °C
Stem length	**Price €** Part no.	**Price €** Part no.	**Price €** Part no.	**Price €** Part no.	**Price €** Part no.	**Price €** Part no.
40 mm	64116	**64132**	64146	**64160**	---	---
63 mm	64117	**64133**	64147	**64161**	64177	64193
100 mm	64118	**64134**	64148	**64162**	64178	64194
160 mm	64119	64135	64149	64163	64179	64195

[1] Version with mounting position 135° on request. [2] Extra charge for stainless steel screw-in socket: €.
Minimum order quantity for non-stock items = 10 pieces

11

Temperature control thermostats TRT with capillary tube

- Mechanical temperature controllers
- For controlling and monitoring thermal processes
- Ideal for heat and process engineering
- Simple, robust design

Page 377

Application

Mechanical temperature controller and limiter without external power supply. The device is suitable for application areas in the field of heat and process engineering. With the liquid-filled measuring systems and the short response times, the devices lend themselves for controlling thermal processes in appliance engineering, ovens, heating and air conditioning and other industrial or domestic applications.

Description

The temperature measured at the probe causes a change in the volume of the measuring liquid in the probe-capillary system. Electrical switching is triggered by the force acting. A thermowell allows for pressure-tight installation of the probe in various types of pressurised tanks.

Technical specifications

Type
TR 2

Operating range
0/90 °C

Tolerance
±6 K at 20 °C

Influence of ambient temperature
-0.054 °C/°C

Switching differential
ΔT 4 ± 1 K

Adjustment angle
270°

Probe element
Liquid-filled
ø 6.5 x 95 mm

Operating temperature range
Probe: Max. 130 °C
Housing: Max. 90 °C

Probe and capillary tube
Copper

Capillary length
Cu capillary tube with PVC coating, black
L = 1,000, 1,500 mm

Degree of protection
IP 00 (EN 60529)

Time constant
DIN-tested
DIN EN 14597:2012-09
Registration number TR/STB 1211

Electrical switching contact
Changeover contact

Contact rating
NC 16(6)A 250 V AC
NO 6(4)A 250 V AC

Options

- Other operating ranges
- Other capillary tube lengths
- Customised versions

i
See page 376 for prices.

Temperature control thermostats TRT with capillary tube

Housing types and dimensions (mm)

Temperature control thermostat TRT,
housing dimensions with adjustment angle

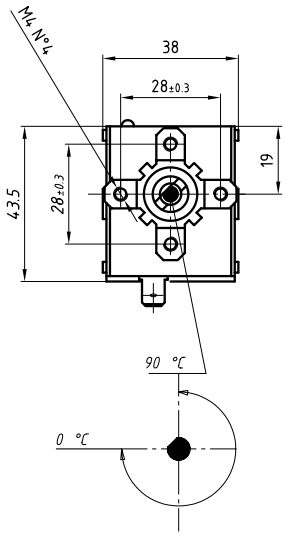

Temperature control thermostat TRT,
housing dimensions and probe dimensions

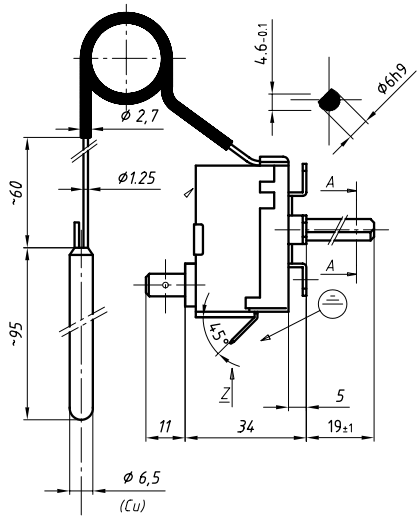

Connections (view Z)

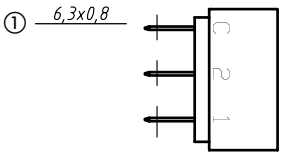

① Connections

Switching scheme

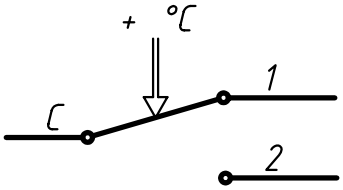

11

Safety temperature cut outs STB with capillary tube

- Ideal for heating and process industries
- For protection against exceeding the maximum temperature
- No external power supply
- Manual reset

Page 377

Application

There are many application areas for safety temperature cut outs in the heating and process industries. In conventional oil or gas fired boilers, these devices are used to monitor the boiler water. The safety temperature cuts outs feature a manual reset button which must be actuated for unlocking.

Description

If the temperature at the probe increases, the measuring liquid in the measuring system expands. If the temperature exceeds a critical value, the device triggers, the voltage-free contact switches and the system is set to a defined safe state. When the temperature has decreased by approx. 15 K, the device can be unlocked and the system resumes operation.

Technical specifications

Type
LS1

Switching point
100 °C

Tolerance
+0 K
-6 K at 20 °C

Influence of ambient temperature
0.25 °C/°C

Switching differential
ΔT 15 ± 8 K

Fail safe
Yes

Probe element
Liquid-filled
ø 6.5 x 95 mm

Operating temperature range
Probe: Max. 125 °C
Housing: Max. 85 °C

Probe and capillary tube
Copper

Capillary length
Cu capillary tube with PVC coating, black
L = 1,000, 1,500 mm

Degree of protection of housing
IP 00 (EN 60529)

Time constant
DIN-tested
DIN EN 14597:2012-09
Registration number TR/STB 1211

Electrical switching contact
Changeover contact

Contact rating
NC 16 (2.5) A 250 V AC
NO 0.5 A 250 V AC

Options

- Other operating ranges
- Other capillary tube lengths
- Customised versions

i
See page 376 for prices.

Safety temperature cut outs
STB with capillary tube

Housing types and dimensions (mm)

Housing dimensions STB

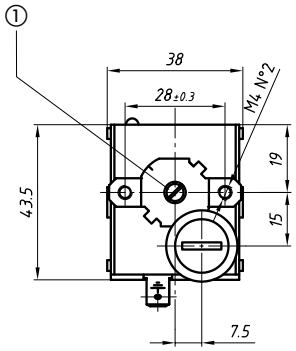

① Sealing wax

Housing and probe dimensions STB

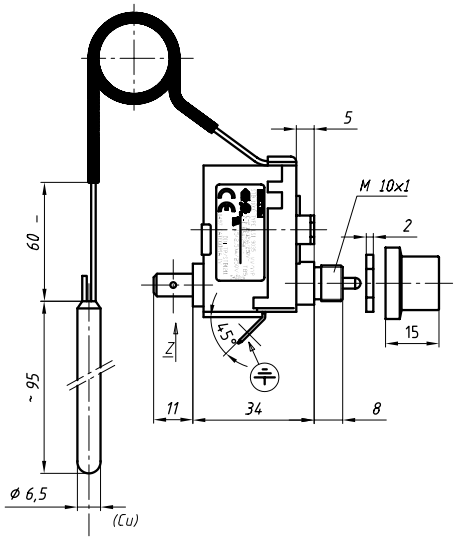

Connections (view Z)

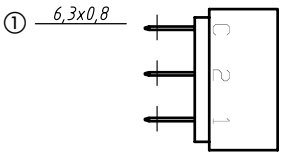

① Connections

Switching scheme

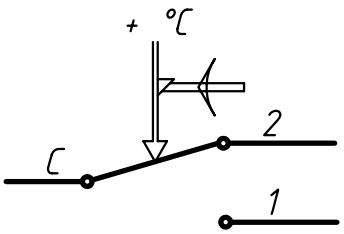

11

Temperature control thermostats TRT and safety temperature cut outs STB with capillary tube

DG: G, PG: 4	Contact	Operating range/ switching point	Capillary length	Type	Part no.	Price €
Thermostats TRT						
	Changeover contact	0/90 °C	1,000 mm	TRT TR2/711 EU	**67216X**	
	Changeover contact	0/90 °C	1,500 mm	TRT TR2/711 EU	**67217X**	
	Changeover contact	10/200 °C	1,000 mm	TRT TR2/712 EU	**67609**	
	Changeover contact	Stop/310 °C	1,000 mm without jacket	TRT TR2/711 EU	**67639**	
Safety temperature cut out STB						
	Changeover contact	100 °C	1,000 mm	STB LS1/971 FU	**67276X**	
	Changeover contact	100 °C	1,500 mm	STB LS1/971 FU	**67277X**	
	Single	100 °C	1,000 mm	STB LS1/971 F1	**67273X**	
	Single	90/110 °C	1,000 mm	ETB LS1/961 E1	**67619**	
	Single	110 °C	1,500 mm	STB LS1/961 F1	**67288X**	
	Changeover contact	75 °C	1,500 mm	STB LS1/971 FU	**67585X**	
	Single 0.3 A/100 mV	100 °C	1,500 mm	STW LS3 F1 without manual reset	**67312X**	
Accessories						
Designation						
Rotary knob 42 mm	---	0/40 °C	---	---	**67342**	
Rotary knob 42 mm	---	0/90 °C	---	---	**67341**	
Rotary knob 42 mm	---	0/120 °C	---	---	**67343**	
Rotary knob 42 mm	---	0/210 °C*	---	---	67344	
Rotary knob 42 mm	---	0/300 °C*	---	---	67345	
Cover for thermostat, black	---	---	---	---	**67346**	
Cover for thermostat, chrome-plated	---	---	---	---	**67347**	
Fixing clamp	---	---	---	---	**67348**	
Press-on spring for pockets	---	---	---	---	**67361**	

*Minimum order quantity = 100 pieces per delivery.

Pockets for thermometers and thermostats with capillary tube

DG: G, PG: 2

Type	Pocket ½" 7 x 8 mm		Pocket ½" 9 x 10 mm		Pocket ½" 15 x 16 mm		Profile pocket ½" 15 x 16 mm	
Dimensions (mm)	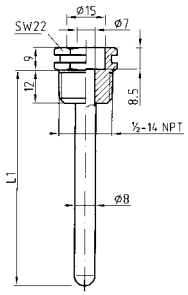		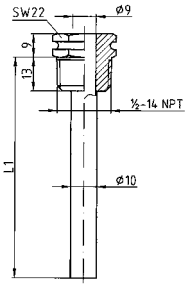		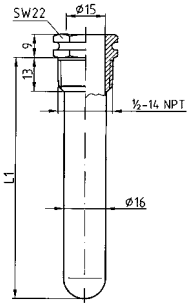		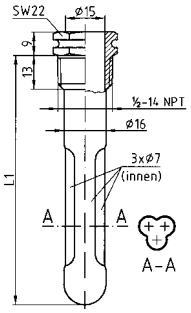	
Connection	½ NPT		½ NPT		½ NPT		½ NPT	
P_{max}*	4 bar		4 bar		4 bar		4 bar	
T_{max}*	200 °C		200 °C		200 °C		200 °C	
Material	Brass/Cu alloy							
Stem length L1	**Price €** Part no.	PU**	**Price €** Part no.	PU**	**Price €** Part no.	PU**	**Price €** Part no.	PU**
50 mm	**67320**	200	**On request** 67326	200	---		---	
100 mm	**67321**	200	**On request** 67327	200	67331	200	**67335**	200
120 mm	67322	200	**On request** 67328	200	67332	200	**On request** 67336	200
150 mm	**67323**	200	67329	200	**On request** 67333	200	**67337**	200
200 mm	**67324**	200	67330	200	67334	200	**67338**	200
	As above, but nickel-plated							
Stem length L1	**Price €** Part no.	PU**	**Price €** Part no.	PU**	**Price €** Part no.	PU**	**Price €** Part no.	PU**
100 mm	**67321N**	200	**On request**	200	67331N	200	**67335N**	200
120 mm	**On request** 67322N	200	**On request**	200	**On request** 67332N	200	**On request** 67336N	200
150 mm	**67323N**	200	**On request**	200	67333N	200	**67337N**	200
200 mm	**67324N**	200	**On request**	200	67334N	200	**67338N**	200

* Applies to static load (load always depends on medium, pressure and temperature of medium, flow rate, installation length and material of thermowell).
** Minimum order quantity manufactured goods = 1 packing unit (PU).

Surface mounting thermostats with housing GAT

- **Mechanical temperature controller**
- **Ideal for underfloor heating systems**
- **Temperature limitation at pipes**
- **Easy installation with strap**

Application

Surface mounting thermostat for strap mounting at pipes from 16 to 100 mm diameter. The version with internal adjustment and temperature control range up to 60 °C is specially suited for underfloor heating systems.

Description

The surface mounting thermostat us a bimetal strip (element consisting of two metal strips with different heat expansion coefficients). When the temperature changes, the bimetal strip bends which triggers electrical switching.

Technical specifications

Type
GAT

Operating range
20/60 °C and 20/90 °C

Tolerance
+2 K / -8 K

Switching differential
ΔT 8 ± 3 K

Adjustment
GAT/7RC: Externally adjustable
GAT/7HC: Internally adjustable

Probe element
Bimetal

Operating temperature range
Housing: Max. 85 °C

Housing
Upper part: Plastic (PVC), grey (RAL 7035)
Base plate: Galvanised sheet steel

Cable entry
Plastic (PVC), black
M20 x 1.5

Degree of protection housing
IP 20 (EN 60529)

Response time
1 K/minute

Electrical switching contact
Changeover contact

Contact rating
NC 16 (2.5) A 250 V AC
NO 2.5 A 250 V AC

Options

- Safety surface mounting thermostat with housing and with manual reset type GSA/TCS (liquid filled)

11

i
See page 388 for prices.

Surface mounting thermostats with housing GAT

Housing types and dimensions (mm)

GAT/7RC, external adjustment

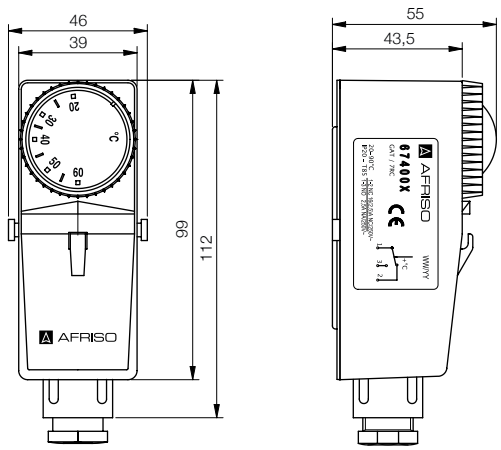

GAT/7HC, internal adjustment

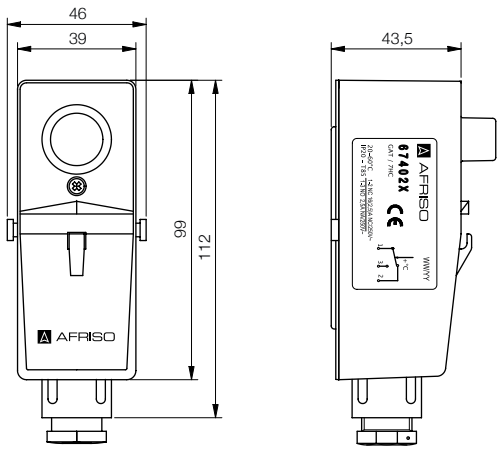

Switching scheme

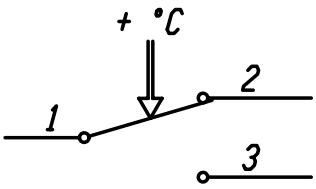

11

Immersion thermostats with housing GTT

- **Mechanical temperature controller**
- **For controlling heating and cooling processes**
- **Ideal for heat and process engineering**
- **Control directly at the process**

Application

Mechanical temperature controller and limiter. The device is suitable for application areas in the field of heat and process engineering. Heating and cooling processes in industrial or domestic applications can be controlled directly at the process.

Description

The temperature measured at the probe causes a change in the volume of the measuring liquid. Electrical switching is triggered by the force acting. The thermowell allows for direct installation pressure-tight tanks.

Technical specifications

Type
GTT/TC2

Operating range
0/90 °C

Tolerance
±1 K at ambient temperature 20 °C

Switching differential
ΔT 4 ± 1 K

Adjustment
GTT/7RG: Externally adjustable
GTT/7HG: Internally adjustable

Probe element
Liquid-filled
ø 8 mm
Length: 100, 150 or 200 mm

Operating temperature range
Probe: Max. 130 °C
Housing: Max. 85 °C

Process pressure
Max. 4 bar

Probe
Copper

Housing
Plastic (PVC), grey (RAL 7035)

Cable entry
Plastic (PVC), black
M20 x 1.5

Degree of protection housing
IP 40 (EN 60529)

Time constant
DIN-tested
DIN EN 14597:2012-09
Registration number TR/STB 1211

Electrical switching contact
Changeover contact

Contact rating
NC 10 (2.5) A 250 V AC
NO 6 (2.5) A 250 V AC

Options

- Customised versions

11

i
See page 388 for prices.

Immersion thermostats with housing GTT

Housing types and dimensions (mm)

GTT/7RG, external adjustment

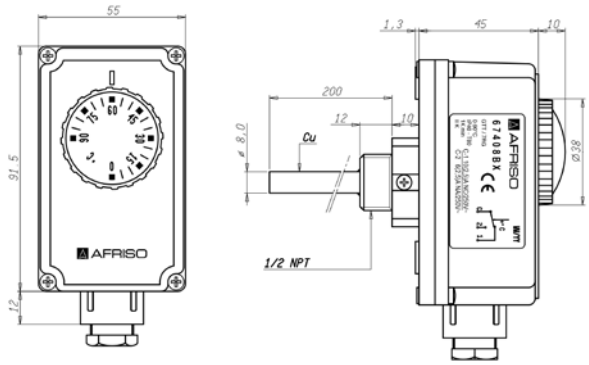

GTT/7HG, internal adjustment

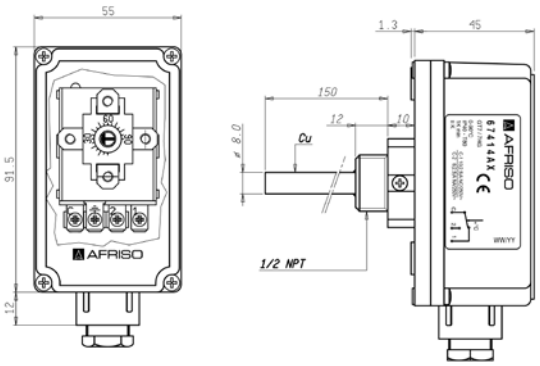

Switching scheme

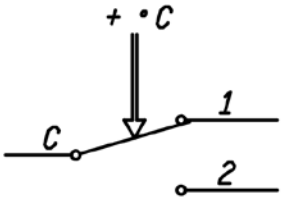

11

Thermostats with housing GTK with capillary tube

- **Mechanical temperature controller for remote measurement**
- **For controlling heating and cooling processes**
- **Ideal for heat and process engineering**

Page 377

Application

Mechanical temperature controller and limiter for remote measurement. The device is suitable for application areas in the field of heat and process engineering. Heating and cooling processes in industrial and domestic applications (in particular solar systems) are easy to control and monitor.

Description

The temperature measured at the probe causes a change in the volume of the measuring liquid in the probe-capillary system. Electrical switching is triggered by the force acting. A thermowell allows for pressure-tight installation of the probe in various types of pressurised tanks.

Technical specifications

Type
GTK/TC2

Operating range
0/90 °C

Tolerance
+3 K at ambient temperature 20 °C

Switching differential
ΔT 4 ± 1 K

Adjustment
Externally adjustable

Probe element
Liquid-filled
ø 6.5 x 95 mm

Operating temperature range
Probe: Max. 150 °C
Housing: Max. 80 °C

Probe
Copper

Housing
Plastic (PVC), grey (RAL 7035)

Cable entry
Plastic (PVC), black
M20 x 1.5

Capillary length
Cu capillary tube with PVC coating, black
L = 1,000, 2,000 mm

Degree of protection housing
IP 40 (EN 60529)

Time constant
DIN-tested
DIN EN 14597:2012-09
Registration number TR/STB 1211

Electrical switching contact
Changeover contact

Contact rating
NC 10 (2.5) A 250 V AC
NO 6 (2.5) A 250 V AC

Options

- Customised versions

i
See page 388 for prices.

Thermostats with housing GTK with capillary tube

Housing types and dimensions (mm)

GTK/7RD, external adjustment

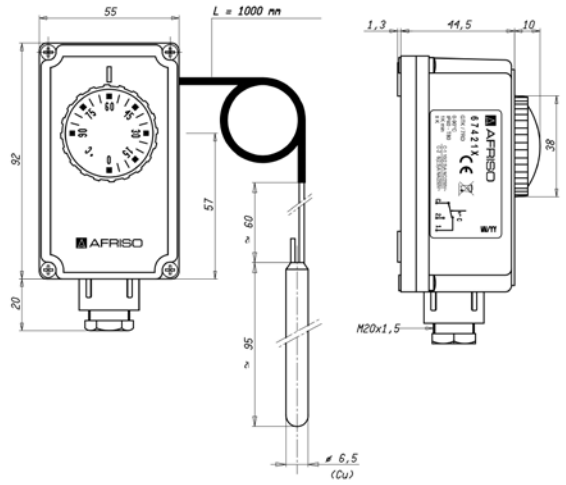

Switching scheme

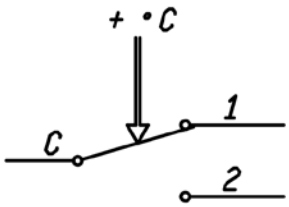

Room thermostats with housing GRT

- Mechanical temperature controllers
- For monitoring of greenhouses
- For use in animal breeding applications
- Easy, wall mounting

Bottom connection version

Application

Mechanical room thermostat for industrial use. Due to the high degree of protection, the device can be used in humid rooms and in animal breeding applications. The room thermostats are also suitable for temperature monitoring in greenhouses.

Description

The temperature measured at the probe causes a change in the volume of the measuring liquid. Electrical switching is triggered by the force acting.

Technical specifications

Type
GRT

Operating range
0/40 °C and 0/55 °C

Tolerance
+2 K at ambient temperature 20 °C

Switching differential
0/40 °C ΔT 2 ± 1 K
0/55 °C ΔT 3 ± 1 K

Adjustment
GRT/7RT: Externally adjustable
GRT/7HT: Internally adjustable

Probe element
Liquid-filled

Operating temperature range
Probe: 0/40 °C 50 °C
Housing: 0/55 °C 85 °C

Probe
Copper, nickel-plated

Housing
Plastic (PVC), grey (RAL 7035)

Cable entry
Plastic (PVC), black
M16 x 1.5

Degree of protection housing
IP 54 (EN 60529)

Electrical switching contact
Changeover contact

Contact rating
NC 16 (2.5) A 250 V AC
NO 6 (2.5) A 250 V AC

11

See page 388 for prices.

Room thermostats with housing GRT

Housing types and dimensions (mm)

GRT/7RT, external adjustment

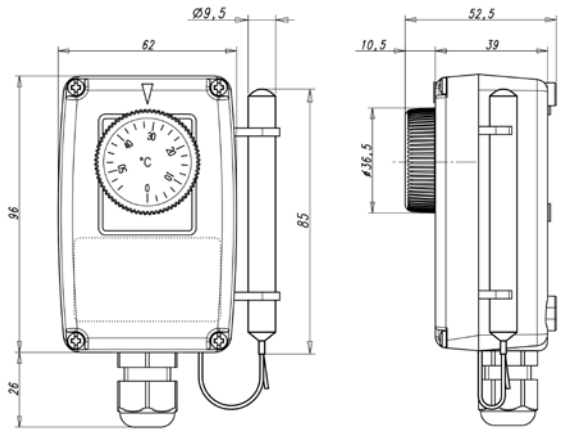

GRT/7HT, internal adjustment

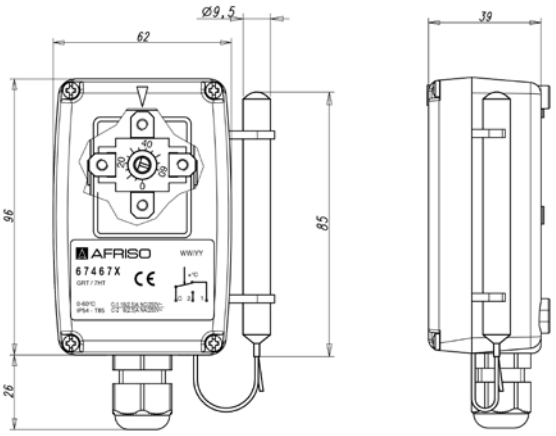

GRT/7HT, radial, internal adjustment

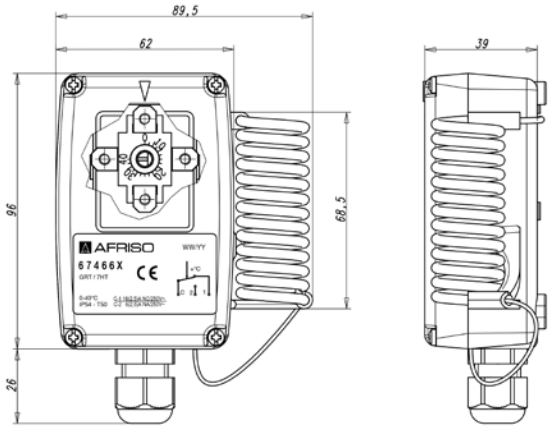

Switching scheme

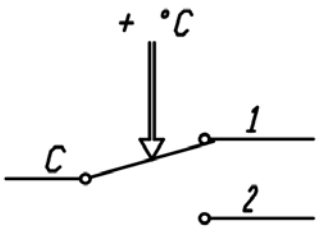

11

Twin thermostats with housing GDT

- Mechanical temperature controller
- Ideal for all heat and process engineering applications
- With integrated safety temperature cut out
- Control directly at the process

Version TRT/STB with reset knob

Application

Twin thermostat with housing with pocket. Available with two temperature control thermostats (TRT) for controlling heating and cooling processes in industrial and domestic applications. Also available as version with temperature control thermostat (TRT) and safety temperature cut out (STB) with manual reset knob. The device is suitable for application areas in the field of heat and process engineering.

Description

The temperature measured at the probe causes a change in the volume of the measuring liquid. Electrical switching is triggered by the force acting. The thermowell allows for direct installation pressure-tight tanks.

Technical specifications

Type
GDT/TLSC

Operating range/switching point
TRT: 0/90 °C – 0/90 °C
STB: 100 °C

Tolerance
STB: +0 K/-6 K at ambient temperature 20 °C
TRT: ± 3 K

Switching differential
ΔT 4 ± 1 K

Adjustment
TRT externally or internally adjustable

Probe element
Liquid-filled
ø 16 mm, profile pocket
Length 100, 150 or 200 mm

Operating temperature range
Probe: Max. 125 °C
Housing: Max. 80 °C

Process pressure
Max. 4 bar

Probe
Copper

Housing
Plastic (PVC), grey (RAL 7035)

Cable entry
Plastic (PVC), black
M20 x 1.5

Degree of protection housing
IP 40 (EN 60529)

Time constant
DIN-tested
DIN EN 14597:2012-09
Registration number TR/STB 1231

Electrical switching contact
2 x changeover contact

Contact rating
TRT
NC 10 (2.5) A 250 V AC
NO 6 (2.5) A 250 V AC
STB
NC 10 (2.5) A 250 V AC
NO 10 (2.5) A 250 V AC

11

i
See page 388 for prices.

Twin thermostats with housing GDT

Housing types and dimensions (mm)

GDT/8RS, version TRT/STB

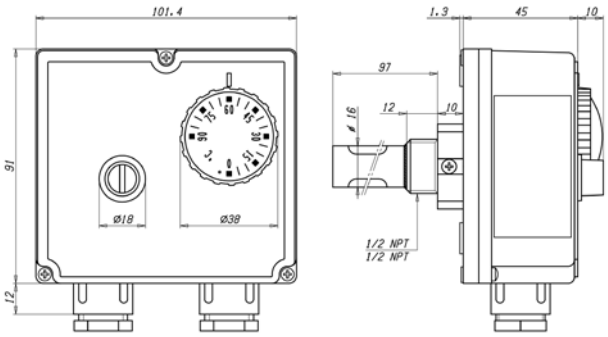

Switching scheme

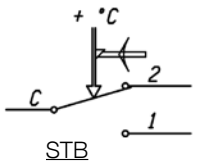

STB

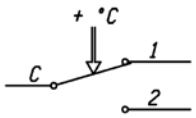

TRT

GDT/8HR, version TRT/TRT

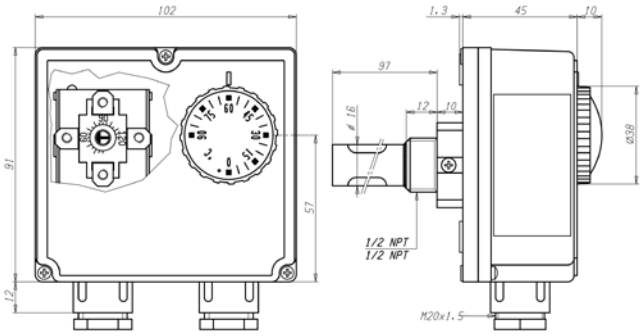

Switching scheme

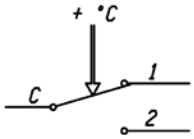

TRT (internal)

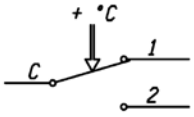

TRT (external)

11

Thermostats with housing

DG: G, PG: 4	Adjustment	Operating range/ switching point	Capillary length	Stem length	**Type**	**Part no.**	**Price €**
Surface mounting thermostats with housing							
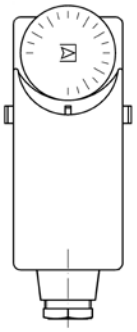	External	20/60 °C	---	---	GAT/7RC	**67400X**	
	External	20/90 °C	---	---	GAT/7RC	**67401X**	
	Internal	20/60 °C	---	---	GAT/7HC	**67402X**	
	Internal	20/90 °C	---	---	GAT/7HC	**67403X**	
Immersion thermostats with housing							
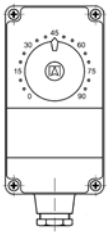	External	0/90 °C	---	100 mm	GTT/7RG	**67407X**	
	External	70/210 °C	---	100 mm	GTT/7RG	**67708**	
	External	0/90 °C	---	150 mm	GTT/7RG	**67408AX**	
	External	0/90 °C	---	200 mm	GTT/7RG	**67408BX**	
	Internal	0/90 °C	---	100 mm	GTT/7HG	**67413X**	
	Internal	0/90 °C	---	150 mm	GTT/7HG	**67414AX**	
	Internal	0/90 °C	---	200 mm	GTT/7HG	**67414BX**	
Capillary type thermostats with housing/room thermostats with housing							
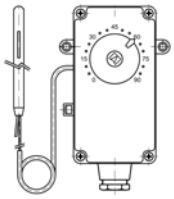	External	0/90 °C	1,000 mm	---	GTK/7RD	**67421X**	
	External	0/90 °C	2,000 mm	---	GTK/7RD	**67424X**	
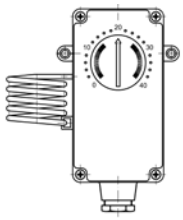	External	0/40 °C	---	---	GRT/7RT	**67464X**	
	External	0/55 °C	---	---	GRT/7RT	**67465X**	
	Internal	0/40 °C	---	---	GRT/7HT	**67466X**	
	Internal	0/55 °C	---	---	GRT/7HT	**67467X**	
Twin thermostats with housing							
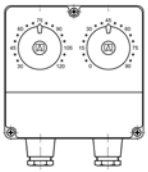	Internal/ external	0/90 °C – 0/90 °C	---	100 mm	GDT/8HR	**67447X**	
	Fixed/external	0/90 °C (100 °C)	---	100 mm	GDT/8RS	**67453X**	
	Fixed/internal	0/60 °C– 30/120 °C	---	280 mm	GDT-TTCA	**67640**	
	Fixed/external	0/90 °C (100 °C)	---	150 mm	GDT/8RS	**67454AX**	
	Fixed/external	0/90 °C (100 °C)	---	200 mm	GDT/8RS	**67454BX**	

* Minimum order quantity for non-stock items = 5 pieces.

Resistance thermometers WTh 20/21

WTh 20

Technical specifications

Version
Plug-in type resistance thermometer

Sensor
1 x Pt 100
2-, 3- or 4-wire
Class B, IEC 751

Probe
Ø 6 mm, length 50 mm
Stainless steel 316 Ti

Electrical connection
Cable with wire ferrules

Cable
PVC (heat-resistant)

Measuring range
With installation type
Fixed: -40/+105 °C
Moving: -5/+105 °C

Options

- Coated measuring line
- Sensor class A
- Sensor PT 1,000
- Process connection as adjustable compression fitting or fixed male connection
- Connector ISO 4400
- Miniature circular plug
- Lemosa connector
- Other probe diameters
- Other probe lengths
- Other cables:
  Silicone (-50/+180 °C)
  PTFE (-200/+260 °C)
  Glass fibre with stainless steel braiding (-50/+400 °C)
- Bending protection

WTh 21

Version
Indoor and outdoor resistance thermometer for wall mounting

Sensor
1 x Pt 100
2-, 3- or 4-wire
Class B, IEC 751

Probe
Ø 6 mm, length 42 mm
Stainless steel 316 Ti

Electrical connection
Cable gland

Measuring range
-50/+90 °C

Housing
Impact-resistant plastic
W x H x D: 58 x 64 x 36 mm

Degree of protection
IP 65 (EN 60529)

Options

- Open probe
- Sensor class A
- Sensor PT 1,000/Ni 1,000
- Transmitter installation

See page 392 for prices.

Resistance thermometers WTh 22/23

WTh 22

Description

Version
Resistance thermometer especially for use in air ducts

Technical specifications

Sensor
1 x Pt 100
2-, 3- or 4-wire
Class B, IEC 751

Probe
Ø 8 x 1 mm, perforated
Stainless steel 316 Ti

Process connection
Mounting flange Ø 40 mm, adjustable, stainless steel

Installation lengths
100, 160, 250 mm

Housing
Impact-resistant plastic
W x H x D: 58 x 64 x 36 mm

Degree of protection
IP 54 (EN 60529)

Measuring range
0/130 °C

Options

- Process connection G½B (adjustable compression fitting or fixed male connection)
- Sensor class A
- Sensor PT 1,000
- Transmitter installation (standard: 0/100 °C = 4–20 mA)

WTh 23

Version
Compact screw-in resistance thermometer specially for heating, ventilation and air conditioning applications

Sensor
1 x Pt 100
2-, 3- or 4-wire
Class B, IEC 751

Measuring insert
Not replaceable

Thermowell
Ø 6 mm, stainless steel 316 Ti

Process connection
G¼B stainless steel 316 Ti

Installation length
100 mm

Connection head (degree of protection)
Type J, aluminium die cast (IP 66)

Measuring range
-35/+180 °C

- Sensor class A
- Sensor PT 1,000
- Transmitter installation
- Other thermowell diameters
- Thermowell with bend, measuring tip with spring
- Neck
- Other process connections
- Other installation lengths

11

See page 392 for prices.

Resistance thermometers types WTh 20/21/22/23

Dimensions (mm)

Type WTh 20

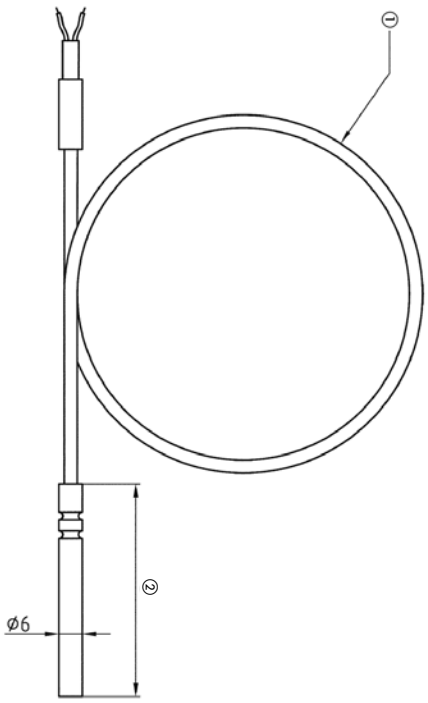

① Cable
② Probe length

Type WTh 21

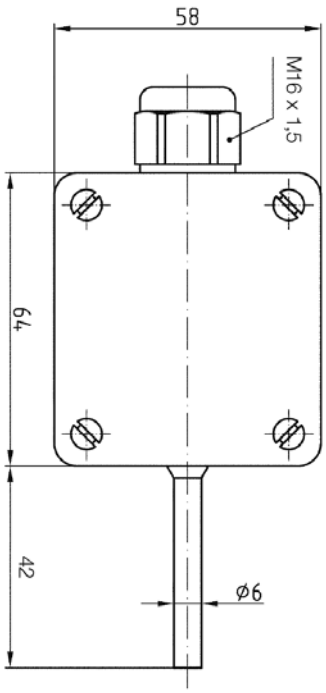

Type WTh 22

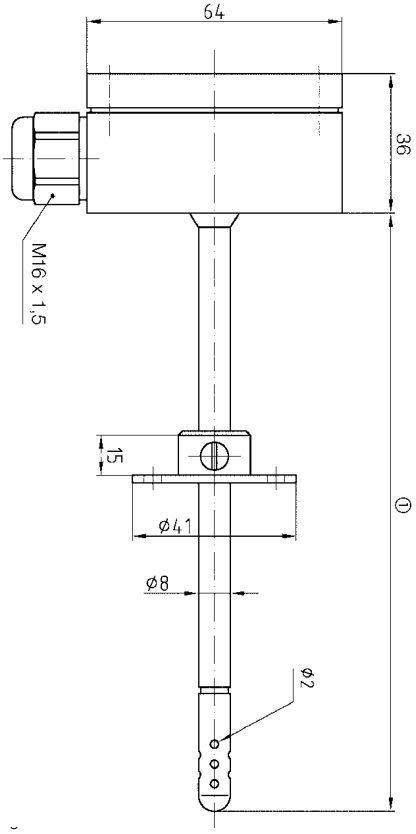

① Installation

Type WTh 23

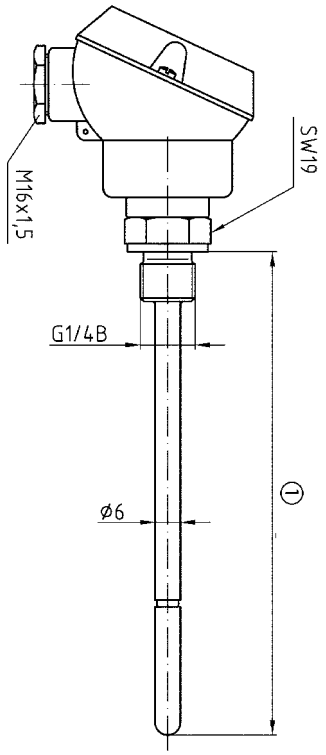

① Installation length

11

Resistance thermometers

DG: H, PG: 4

Type	WTh 20	WTh 21	WTh 22	WTh 23
Version	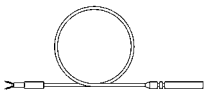	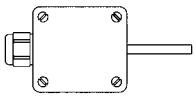	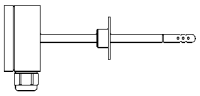	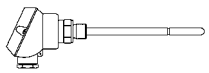
Sensor	1 x Pt 100 3-wire, class B	1 x Pt 100 3-wire, class B	1 x Pt 100 3-wire, class B	1 x Pt 100 3-wire, class B
Thermowell/probe diameter Material	6 mm Stainless steel 316 Ti	6 mm Stainless steel 316 Ti	Perforated 8 mm Stainless steel 316 Ti	6 mm Stainless steel 316 Ti
Neck	---	---	---	---
Process connection	---	---	Mounting flange Ø 40 mm	G¼B Stainless steel 316 Ti
Connection head / electrical connection	PVC cable Wire ferrules	Plastic/cable gland	Plastic/cable gland	Type J/cable gland
Measuring range fixed (moving)	-40/+105 °C (-5/+105 °C)	-50/+90 °C	0/130 °C	-35/+180 °C
Installation length	**Price €** Part no.	**Price €** Part no.	**Price €** Part no.	**Price €** Part no.
44 mm	Probe length 50 mm Up to cable length 2,000 mm **12.20** 32220 Cable extension per 500 mm **0.65**	32400	---	---
100 mm		---	32215	32225
160 mm		---	32216	32226
250 mm		---	32217	32227
400 mm		---	---	32228
Extra charges (without PG)	**Price €**	**Price €**	**Price €**	**Price €**
Per additional 100 mm ** installation length	---	---		
1 x Pt 100 4-wire				
2 x Pt 100 2-wire	---	---	---	
Sensor class A				
Connection head Type BBK	---	---		
Transmitter installation* DC 7.5–30 V/4–20 mA	---			

* Applies to standard measuring ranges (-50/+50, 0/50, 0/100, 0/120, 0/150, 0/200, 0/300 °C), extra charge in all other cases €.
** Applies up to 1,000 mm, one-time extra charge for installation length greater than 1,000 mm: €.

i

See the catalogue INDUSTRIAL TECHNOLOGY for additional resistance thermometers.

CATALOGUE INDUSTRIAL TECHNOLOGY

Temperature measuring instruments and controllers for industrial technology

Bimetal stainless steel thermometers

- For corrosive media
- Pointer adjustable in case of "plain" connection

Nominal sizes
63 – 80 – 100

Ranges
-20/+60, 0/60, 0/120, 0/160 °C

Page 273

Bimetal thermometers for chemical applications

- For chemical, process engineering and food industry applications
- Many options for adaptation to specific applications

Nominal sizes
63 – 80 – 100

Ranges
-20/+60, 0/60, 0/120, 0/160 °C

Page 273

Gas filled thermometers

- For chemical, process engineering and food industry applications
- Fast response

Nominal sizes
100 – 160

Ranges
-20/+60, 0/60, 0/120, 0/160, 0/200, 0/300, 0/400, 0/500 °C

Page 278

Resistance thermometers WTh 24 - 28

- Versions for machine and plant engineering, food, beverages and pharmaceutical industries, biotechnology
- For medium to high pressure and flow loads
- Pt 100 sensor
- Installation length up to 400 mm

Measuring ranges
-35/+400, -35/+300, -35/+550 °C

From page 288

Resistance thermometers WTh 30

- Hygienic design as per EHEDG recommendations
- Various process connections, transducer can be integrated
- Pt 100 sensor
- Installation length up to 200 mm

Measuring ranges
-50/+200 °C

From page 295

i This and many other products can be found in the catalogue INDUSTRIAL TECHNOLOGY

The BlueLine measuring instrument series at a glance

i

This and many other products can be found in the catalogue PORTABLE MEASURING INSTRUMENTS

		BLUELYZER ST	EUROLYZER STx	MULTILYZER STx	STM 225	Analyzer MCA 5000	Series S2600
O_2	Parameters/measured values	•	•	•		•**	
CO (up to 6,000 ppm)		•				•**	
CO (up to 10,000 ppm)			•	•		•**	
CO_2 (calculated)		•	•	•		•**	
NO			•***	•***		•**	
NO_2				•***		•**	
NO_X			•***	•***			
CO (40,000 ppm)				•***		•**	
SO_2				•***		•**	
Particulate matter					•		
Methane							
Propane (liquefied gas)							
Butane							
Lambda		•	•	•			
Eta efficiency / eta coefficient		•	•	•			
Flue gas loss qA		•	•	•			
Temperature		•	•	•		•	
Pressure		•	•	•		•***	•
Dew point		•	•	•			
Humidity in %							
Volume flow			•***	•***			
Measurements of filters, ventilation systems, ducts	Typical applications areas						•
Measurements of production facilities, tanks							•
Burner servicing (gas, oil, solid fuel systems)		•	•	•	•	•	•
CO ambient measurement		•	•	•		•	
Servicing of water heaters		•	•	•			
Servicing of CHP systems			•	•			
Flue gas measurement		•	•	•		•	
Pressure measurement		•	•	•		•	•
Measurement of inlet, flow, static and nozzle pressure			•	•			•
Pressure / vacuum measurement		•	•	•			•
Differential pressure measurement			•	•			•
Vacuum measurement							•
Temperature measurement (flue gas, air, external wall)		•	•	•			
Temperature measurement (water)							
Temperature measurement (moving objects)							
Surface temperature measurement		•	•	•			
Differential temperature measurement		•	•	•			
Draft / chimney draft measurement		•	•	•			•
Ventilation loss measurement							
Flue gas loss measurement		•	•	•			
Heating system check							
4 Pa test							
Gas leak detection							
Gas concentration measurement							
Flow rate measurement (water)							
Humidity measurement (material/moisture/climatic conditions in rooms)							
Air velocity			•***	•***			
BImSchV	Approvals		•	•			
EN 50379-2			•	•			•
EN 15378							
KÜO			•	•			
		Page 14	Page 16	Page 18	Page 20	Page 22	Page 31

* See product description on the catalogue page or in the operating instructions.
** Depends on product version.
*** Optional

Series S4600 ST	TM 7/ TMD 7	TMD 9	TM6	TM8-IR	MFM 22	FT Series	BlueAir-STx	GSP Series	CAPBs®
								•	
								•	
								•	•
	•	•	•	•	•***	•	•***		•
•									•
					•	•	•***		•
•***							•		•
•							•		•
•								•	•
•									•
	•	•	•	•					•
•									•
•									•
•									•
•									•
•									•
	•	•	•	•		•	•***		•
	•	•	•	•					•
				•					
	•	•	•	•					•
	•**	•							•
•									•
									•
									•
									•
								•	•
								•	•
									•
					•	•	•***		•
•***							•		•
•	•	•							
									•
Page 32	Page 48	Page 49	Page 50	Page 50	Page 51	Page 53	Page 78	Page 42	Page 55

Innovative. Future proof. Simply powerful.

From a simple measuring instrument to an all-rounder.

You already own an AFRISO BlueLine measuring instrument* and want to use it for the majority of your daily measuring tasks, for example, tightness test, gas leak detection, flow rate measurement or 4 Pa test? No problem with your AFRISO measuring instrument. In conjunction with the new AFRISO CAPBs® for pressure, temperature, gas leak detection, humidity and further applications, the most important tasks of heating system technicians and chimney sweeps can be performed easily and with high accuracy. The compact CAPBs® can be connected wirelessly via Bluetooth® Smart to all measuring instruments of the AFRISO BlueLine series*. Measurement data can be transmitted directly to the AFRISO measuring instruments or, by means of a free app, to your smartphone or tablet. The measurement logs can be further transmitted from the measuring instrument as a QR code or, with the free iOS or Android app, as an Excel (CSV) file.

live

ANDROID APP ON Google play

Download on the App Store

See chapter 4 for detailed information on the available CAPBs®.

The CAPBs® excel with an unprecedented diversity of measuring possibilities with a single system. Numerous sensor modules CAPBs® sens can be easily plugged into the modular base handle BG 10. The ergonomic handle itself is made of high-quality plastic. It contains the power supply (battery, optionally rechargeable), a tripod socket, a multi-purpose key and a multi-colour LED. The multi-purpose key features customisable function assignments. For example, it can be used for zero calibration regardless of the measuring site. In addition, a device for audible signals is integrated into the handle. The unit and the measuring instrument or the mobile device are paired once; after that a wireless connection is available for immediate transmission via Bluetooth® Smart. The AFRISO measuring instrument or the free app for smartphone and tablet provide numerous pre-installed measurement menus for the CAPBs®. They include, for example, tightness test and load test, pressure loss measurement, gas leak detection, heating system check, flow rate measurement, etc.

Bluetooth® SMART

The following measuring instruments can be immediately used with the CAPBs®:

* BLUELYZER ST, EUROLYZER STx, MULTILYZER STe/STx pressure measuring instrument series S4600 ST and temperature measuring instrument TMD 9

CAPBs® sensor modules at a glance

		Pressure measurement	Pressure measurement	Pressure measurement	Pressure measurement	Pressure measurement	Pressure transmitter
CAPBs®		PS 10 (20 mbar)	PS 20 (180 mbar)	PS 33 (2 bar)	PS 40/41 (6 bar)	PS 60/61 (20 bar)	PT 70 (25 bar)
Application examples		Measurement of ultra-fine pressure (Pitot measurement)	Check of connection and flow pressure in gas-fired heating systems	Serviceability test (TRGI)	Tightness and load test of gas lines	Stress pressure test at pipe systems	Test of water pipes (test medium water) as per ZVSHK
Methane	Parameters/measured values						
Propane (liquefied gas)							
Butane							
Temperature							
pressure		•	•	•	•	•	•
Dew point							
Humidity in %							
CO							
CO_2							
VOC							
volume flow		•*	•*				
Flow rate measurement (water)	Typical applications areas						
Thermal disinfection							
Measurements of filters, ventilation systems, ducts			•		•	•	
Measurements of production facilities, tanks, gas pipes			•		•	•	•
Burner adjustment/servicing (gas, oil, solid fuel systems)			•		•		
Servicing of water heaters							
pressure measurement		•	•	•	•	•	•
Tightness test (gas)			•		•		
Load test (gas)				•	•		
Serviceability test (gas)				•			
Tightness test (ZVSHK)			•**	•	•**		•***
Strength test (ZVSHK)				•	•**		•***
Stress pressure test						•	•
Measurement of inlet pressure, flow pressure, static pressure, nozzle pressure			•		•		
Pressure / vacuum measurement		•	•		•	•	•
Differential pressure measurement		•	•				
Vacuum measurement		•	•		•	•	
Temperature measurement (flue gas, air, external wall)							
Temperature measurement (water)							
Surface temperature measurement							
Draft/chimney draft measurement		•	•				
Ventilation loss measurement							
Heating system check							
4 Pa test							
Gas leak detection							
Gas concentration measurement							
Moisture measurement (material/moisture/indoor climate/mould)							
Air velocity		•*	•*				
		Page 62	Page 62	Page 62	Page 62	Page 62	Page 64

* Accessories required, see catalogue page.
** With test medium air.
*** With test medium water.

11

Pressure/ temperature	Temperature	Humidity/ air temperature	Air quality	Gas leak detection	CO detection	Flow rate/temperature
FP 10	TK 10 – TK 50	RH 80	AQ 20	GS 10	CO 30	FlowTemp® ST
Determination of ventilation loss (heating system check), 4 Pa test	Determination of temperatures on surfaces, in liquids and in gases	Monitoring or humidity in closed rooms	Fast and reliable detection of VOCs (volatile organic compounds) and CO_2	Detection of leaking flammable gases (e.g. methane)	CO concentration measurement in boiler rooms	Function tests of drinking water heaters and connected pipe systems
				•		
				•		
				•		
•*	•	•				•
•						
		•				
					•	
			•			
			•			
•						•
						•
						•
•			•			
				•		
					•	
•						
•						
	•					
	•					•
	•					
•*						
•						
•						
•						
				•	•	
				•	•	
		•	•			
•						
Page 64	Page 65	Page 67	Page 67	Page 68	Page 68	Page 69

11

Welcome to the future

Cutting edge measuring technology - AFRISO CAPBs® measuring units.

Comprehensive

Easy extension of BlueLine measuring instruments* by a great variety of applications such as pressure measurement, temperature measurement, humidity measurement, volume flow and Pitot measurement, gas leak detection, flow measurement, etc.

Wireless

Wireless, immediate transmission of the measurement data to your AFRISO measuring instrument, smartphone or tablet with Bluetooth® Smart technology.

Flexible

Multi-purpose key with customisable function assignment for ease of use and consistent operation of the CAPBs®, regardless of site.

Bluetooth® SMART

Accurate

Position-independent, temperature-compensated sensor technology for maximum precision in all measuring scenarios.

11

Modular

Numerous, versatile application thanks to modular design with universal base handle for all sensor modules.

Universal

Compatible with our proven BlueLine measuring instruments* or your smartphone and tablet.

The following measuring instruments can be immediately used with the CAPBs®:

* BLUELYZER ST, EUROLYZER STx, MULTILYZER STe/STx, pressure measuring instrument series S4600 ST and temperature measuring instrument TMD 9

Proven

Easy documentation of measurement results on site via IR or Bluetooth® Smart interface of the BlueLine measuring instrument.

Focused

Measurement data centre for saving the measurement results in the BlueLine measuring instrument or the app and creating printouts on site. Optional data logger function for data output in XML format for flexible further processing with standard software applications such as MS Excel.

Error-free

Simultaneous storage of all measured data to the measuring instrument or the mobile devices avoids errors, for example caused by incorrect readings.

Ergonomic

Light-weight. ergonomic handle made of robust, high-quality plastic with integrated magnet for hands-free operation.

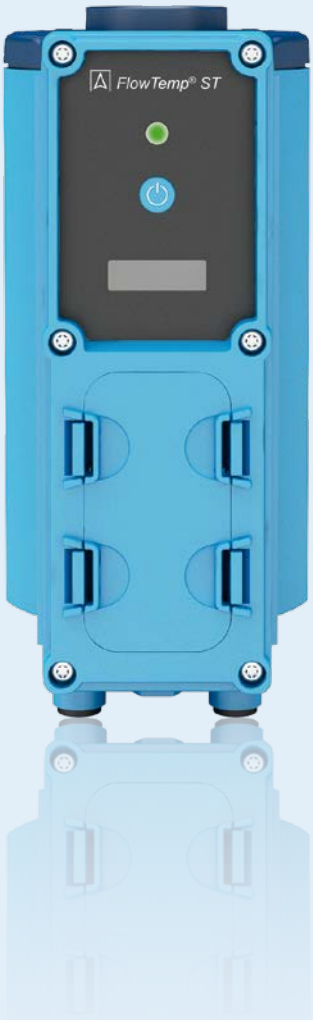

ANDROID APP ON Google play

Download on the App Store

live

Ready for measurement

Free firmware update for BlueLine measuring instruments* with pre-installed measurement menus for all available CAPBs® – can be done by the user at any time via the microSD card.

Independent

Free app for EuroSoft live for operation of all CAPBs® via smartphone and tablet. With pre-installed measurement menus for special applications (for example, gas line checks) and graphical representation of the measurement results.

Quality

100 % made in Germany.

Energy-saving

Automatic switching off of the CAPBs® when the Bluetooth® Smart connection is closed ensures low energy consumption.

Revolutionary

Continuous, simultaneous flow and temperature measurement in water applications with the new, TÜV-tested flow rate/temperature measuring instrument FlowTemp® ST.

Further information:

www.afriso.com/capbs

Filter-/Entlüfterkombination FloCoTOP 2

CHAPTER 12

Appendix – Technical Information

SERVICE

AFRISO services 405

Information material – brochures, flyers, DVDs 406

Downloads 407

AFRISO specialised company search 408

CERTIFICATES

ISO 9001, ISO 14001, ATEX, Pressure Equipment Directive 2014/68/EU 409

PROOFED BARRIER, reddot 410

TECHNICAL INFORMATION

Flange standard EN 1092, International comparison of grades 411

Conversion table pressure units 412

Pressure Equipment Directive 2014/68/EU (PED) 413

Selection criteria/safety considerations for pressure gauges as per EN 837-2 414

CHECK LISTS

Enquiry level measurement 416

Enquiry – thermometers 417

Enquiry – resistance thermometers 418

Enquiry – pressure gauges 419

TEST REPORTS

Liquid-based leak detector LAS 420

Liquid-based leak detector LAG 421

Vacuum type leak detectors 422

Pressure type leak detectors 423

Protection equipment against siphoning 424

TERMS/INDEX

General Terms of Delivery 425

Index 431

Notes

Our Service – Your Benefit

Flexible, cost-aware, on schedule, solution-orientated and fast – the AFRISO team always provides the decisive added value.

Information and presentation

Whether telephone support or on site: Our consultants speak your language – we provide you with personal and individual consulting worldwide. And if you have an in-house event for your customers, we will be glad to participate.

After sales service

Whether commissioning, professional maintenance, calibration or function checks – a network of service centres and our specialists in the plant support you in getting the maximum out of your AFRISO product. For safe processes, precise measurement results, compliance with legal requirements and a long service life.

Repair service

In the case of a malfunction, send us your instrument along with a short description of the problem. We will repair it within a few workdays.

Rental service

You cannot afford to do without your instrument? No problem, our on-site service ensures that you remain on duty. We will have your instrument picked up and send you a rental instrument. For a low rental fee. Ask for availability of this service in your country.

i

Our service and repair department will be glad to answer your questions. Please get in touch with us.
Telephone: +49 7135 102-211

AFRISO information material – brochures, flyers and DVDs

Discover new opportunities and sales potential with AFRISO quality products. We offer a large variety of information materials and media for wholesalers, points of sale, associations, HVAC companies and tank protection companies. You can order these media from us free of charge – even large numbers of copies. All printed materials allow you to add your company stamp to the back page.

Flyers, brochures and product overviews

Flyers, brochures, and product overviews provide information on individual products or complete product ranges for various application areas.

Product literature for end consumers

Product literature for end users is a great medium for fairs, exhibition rooms, mail campaigns and other activities. They present the benefits and applications of AFRISO products for building technology and tank protection in private households in a concise, easy-to-understand way.

i

All information material can be downloaded from www.afriso.com. If you want to order printed material for free, simply specify the number of copies required in your e-mail to **marketing@afriso.de**.

Downloads

Visit www.afriso.com for comprehensive product information and details, technical specifications, terms and conditions, valuable downloads and the latest news.

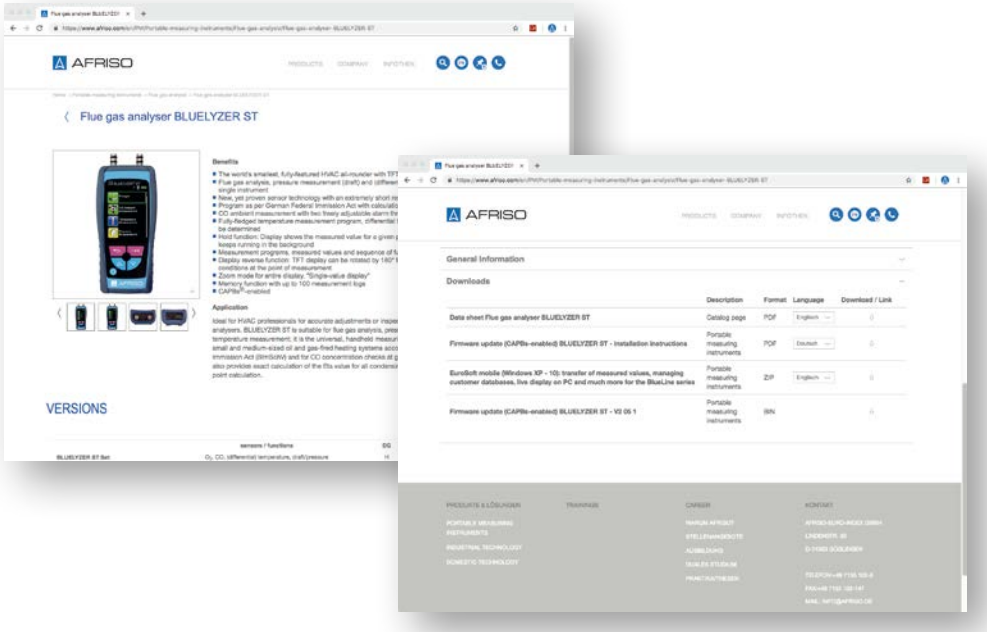

Operating instructions

In addition to product descriptions, the operating instructions include detailed technical data, mounting, installation and safety information as well as information on approvals for all AFRISO products.

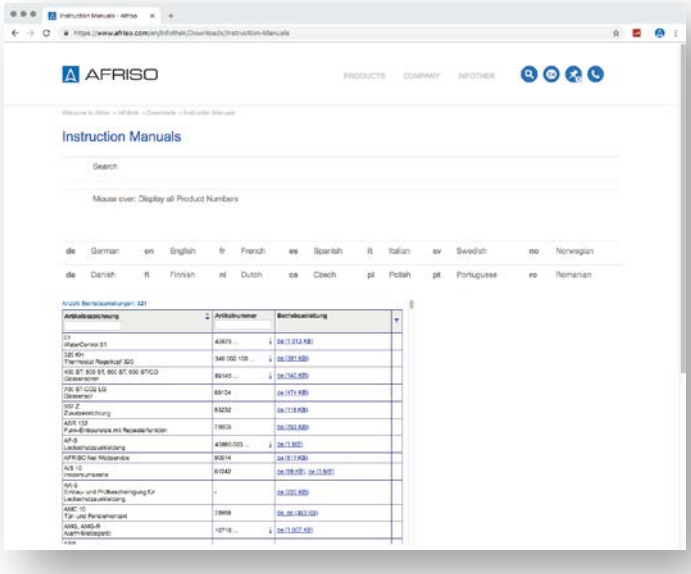

Software

Due to continuous improvements and to changes in legislation and directives, we provide software updates for electronic measuring instruments on an ongoing basis. The updates and the appropriate instructions can be downloaded from our website for free.

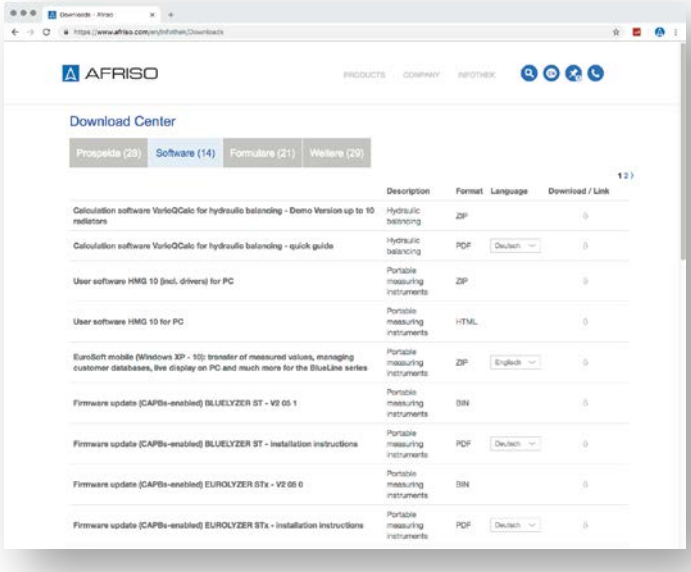

AFRISO specialised company search

Find a specialised professional company fast

AFRISO has an excellent reputation with end users – numerous consumers visit our website every day. The feature "Specialised company search" on our website assists users in finding qualified companies specialised in AFRISO products. You are a company specialised in HVAC, electrical engineering or tank protection and like to use AFRISO quality products for the professional equipment of tanks, heating systems, drinking water installations or for hydraulic balancing? Then register for our service – free of charge, no obligations.
www.afriso.de/registration.

12

This is how the "Find a specialised company" feature works

1. Enter the post code/ZIP or the city, limit the range, if required, and start the search.

2. All registered specialised companies are shown on a map with the appropriate information, sorted by distance from your site.

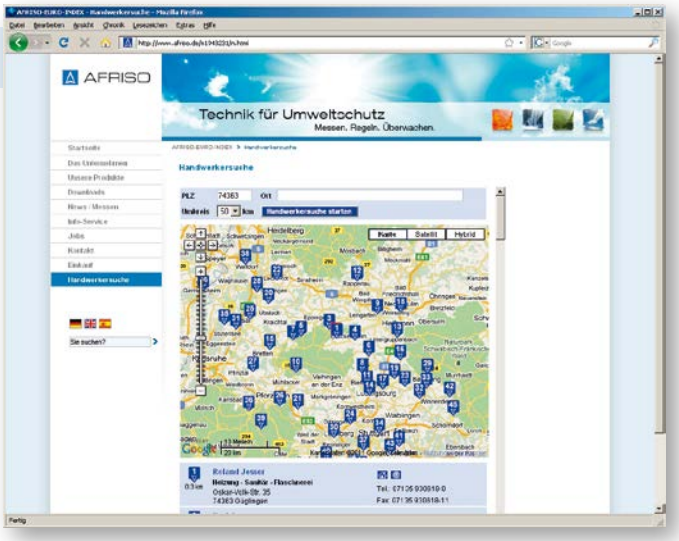

AFRISO

Certificates and approvals

Please find the latest certifications on www.afriso.com in the space of the product presentation.

ZERTIFIKAT ■ CERTIFICATE ■ 認證證書 ■ СЕРТИФИКАТ ■ CERTIFICADO ■ CERTIFICAT

Management Service

ZERTIFIKAT

Die Zertifizierungsstelle
der TÜV SÜD Management Service GmbH
bescheinigt, dass das Unternehmen

AFRISO-EURO-INDEX GmbH

Lindenstr. 20
74363 Güglingen
Deutschland

Friedhofstr. 3
63916 Amorbach
Deutschland

für den Geltungsbereich

Entwicklung, Produktion und Vertrieb von Mess-, Regel- und Überwachungsgeräten für die Haustechnik, Industrie und Umweltschutz

ein Qualitätsmanagementsystem
eingeführt hat und anwendet.

Durch ein Audit, Bericht-Nr. **70010777**,
wurde der Nachweis erbracht, dass die Forderungen der

ISO 9001:2015

erfüllt sind.

Dieses Zertifikat ist gültig vom **2016-08-03** bis **2019-08-02**.

Zertifikat-Registrier-Nr.: **12 100 14587 TMS**.

Product Compliance Management
München, 2016-07-01

TÜV SÜD Management Service GmbH • Zertifizierungsstelle • Ridlerstraße 65 • 80339 München • Germany
www.tuev-sued.de/certificate-validity-check

TÜV®

ZERTIFIKAT ■ CERTIFICATE ■ 認證證書 ■ СЕРТИФИКАТ ■ CERTIFICADO ■ CERTIFICAT

Management Service

ZERTIFIKAT

Die Zertifizierungsstelle
der TÜV SÜD Management Service GmbH
bescheinigt, dass das Unternehmen

AFRISO-EURO-INDEX GmbH

Lindenstr. 20
74363 Güglingen
Deutschland

Friedhofstr. 3
63916 Amorbach
Deutschland

für den Geltungsbereich

Entwicklung, Produktion und Vertrieb von Mess-, Regel- und Überwachungsgeräten für die Haustechnik, Industrie und Umweltschutz

ein Umweltmanagementsystem
eingeführt hat und anwendet.

Durch ein Audit, Bericht-Nr. **70010777**,
wurde der Nachweis erbracht, dass die Forderungen der

ISO 14001:2015

erfüllt sind.

Dieses Zertifikat ist gültig vom **2016-08-03** bis **2019-08-02**.

Zertifikat-Registrier-Nr.: **12 104 14587 TMS**.

Product Compliance Management
München, 2016-07-01

TÜV SÜD Management Service GmbH • Zertifizierungsstelle • Ridlerstraße 65 • 80339 München • Germany
www.tuev-sued.de/certificate-validity-check

TÜV®

ZERTIFIKAT ◆ CERTIFICATE ◆ 認證證書 ◆ СЕРТИФИКАТ ◆ CERTIFICADO ◆ CERTIFICAT

Product Service

EG-Zertifikat

Nr. EX2 16 01 15639 015

Zertifikatsinhaber: **AFRISO-EURO-INDEX GmbH**
Lindenstr. 20
74363 Güglingen
DEUTSCHLAND

Betriebsstätte(n): AFRISO-EURO-INDEX GmbH
Lindenstr. 20, 74363 Güglingen, DEUTSCHLAND

Geltungsbereich: **Elektrische Betriebsmittel in den Zündschutzarten**
Eigenherstellung : Zündschutzart "i"
Handelsware/Zweitschein: Zündschutzart "i", "e", "d"

Die Zertifizierstelle von TÜV SÜD Product Service GmbH bescheinigt mit diesem EG-Zertifikat, dass das oben genannte Unternehmen ein Qualitätssicherungssystem anwendet, das den Anforderungen gemäß Anhang IV der Richtlinie des Rates Nr. 94/9/EG für Geräte und Schutzsysteme zur bestimmungsgemäßen Verwendung in explosionsgefährdeten Bereichen (ATEX) entspricht. Die Gültigkeit dieses EG-Zertifikates setzt eine regelmäßige Überwachung voraus. Umseitige Hinweise sind zu beachten.

Bericht Nr.: 713070999

Gültig bis: 2018-10-31

Datum, 2016-01-21 (Norbert Thimm)

TÜV SÜD Product Service GmbH ist benannte Stelle gemäß der Richtlinie des Rates Nr. 94/9/EG für Geräte und Schutzsysteme zur bestimmungsgemäßen Verwendung in explosionsgefährdeten Bereichen mit der Kennnummer 0123.

Seite 1 von 1

TÜV SÜD Product Service GmbH · Zertifizierstelle · Ridlerstraße 65 · 80339 München · Germany

TÜV®

ZERTIFIKAT ◆ CERTIFICATE ◆ 認證證書 ◆ СЕРТИФИКАТ ◆ CERTIFICADO ◆ CERTIFICAT

Industrie Service

ZERTIFIKAT

Die Notifizierte Stelle nach Druckgeräterichtlinie
- Zertifizierungsstelle für Qualitätssicherungssysteme -
der TÜV SÜD Industrie Service GmbH

bescheinigt, dass das Unternehmen

AFRISO-EURO-INDEX GMBH
Lindenstraße 20
74363 Güglingen, Deutschland

für den Geltungsbereich

Herstellung und Vertrieb von
Wassermangelsicherungen, Wasserstandsbegrenzern und Sicherheitsventilen
als Ausrüstungsteile mit Sicherheitsfunktion
nach EU-Baumusterprüfungen (Baumuster), gemäß Anlage

ein Qualitätssicherungssystem nach der
Druckgeräterichtlinie 2014/68/EU Anhang III, Modul D

eingeführt hat und anwendet.

Durch ein Audit, Bericht -Nr.: Q-IS-AN3-STG-PED-394-559-18, wurde der Nachweis erbracht, dass die betreffenden Anforderungen erfüllt sind.

Der Hersteller ist berechtigt, die im Rahmen des Geltungsbereiches dieses Qualitätssicherungssystems hergestellten Druckgeräte bei der Kennzeichnung mit unserer Kenn-Nummer wie dargestellt zu versehen:

CE 0036

Zertifikat - Nr. DGR-0036-QS-805-18
gültig bis 14. November 2021
unter der Voraussetzung von bestandenen jährlichen Überwachungsaudits

Filderstadt, 20. August 2018

Peter Pek
Notified Body No.: 0036

TÜV SÜD Industrie Service GmbH
Westendstraße 199
80686 München
Germany

Tel.: +49 711 70 05 289
Fax: +49 711 70 05 351
e-mail: martina.john@tuev-sued.de

TÜV®

TÜV SÜD Industrie Service GmbH · DGR-QS-Zertifizierungsstelle · Germany

PROOFED BARRIER®
Qualitätsgemeinschaft geruchsgesperrte Heizöltanks e.V.

Zertifikat

Die Qualitätsgemeinschaft Geruchsgesperrte Heizöltanks e.V.
verleiht der Fima

AFRISO-EURO-INDEX GmbH
D-74363 Güglingen

für folgende 7 Produkte:

- Automatische Heizölentlüfter Flow-Control in Verbindung mit einem PA Schlauch 4 x 1 mm
- Heizölfilter, Zweistrangfilter Z 500
- Grenzwertgeber GWG 12/K
- Membran-Antiheberventile MAV
- Automatische Heizölentlüfter FloCo-TOP in Verbindung mit einem PA Schlauch 4 x 1 mm
- Mechanische Füllstandmessgeräte MT-Profil R
- Entnahmegarnituren Euroflex

das Recht die Marke PROOFED BARRIER® zu führen

Die Verleihung erfolgt auf Grund des positiven Berichtes des Qualitätsausschusses vom 16.04.2007 unter Zugrundelegung des Erstprüfungsberichtes des Fraunhofer Institutes für Verfahrenstechnik und Verpackung ivv, 85354 Freising vom 05.03.2007. Die Firma AFRISO-EURO-INDEX GmbH unterwirft sich der laufenden Überwachung durch das Fraunhofer Institut ivv und den Regeln der Qualitätsgemeinschaft Geruchsgesperrte Heizöltanks e.V. (QgH e.V.) sowie der Markensatzung der QgH e.V. in der jeweils geltenden Fassung.

Würzburg, den 16.04.2007

Wolfgang Dehoust
Vorsitzender der Qualitätsgemeinschaft Geruchsgesperrte Heizöltanks e.V.

reddot award 2014
winner

The award "Red Dot" for high design quality, expressing innovation in form and function in an exemplary manner, is presented to:
Die Auszeichnung „Red Dot" für hohe Designqualität, die in beispielhafter Weise Innovation in Form und Funktion ausdrückt, wird verliehen an:

FT
Room Temperature Sensor
Raumfühler

Manufacturer
AFRISO-Euro-Index GmbH,
Güglingen, Germany
In-house design
Eugen Mayer, Jürgen Fritz
Design
Kachel Industriedesign
(Markus Kachel),
Plein, Germany

Essen, 7 July 2014

Stefan Eckstein, Munich, Germany
Nils Toft, Copenhagen, Denmark
Professor Danny Venlet, Brussels, Belgium
Professor Dr. Peter Zec, Founder & CEO of Red Dot, Essen, Germany

Information on the flange standard EN 1092 / international comparison of grades

Conversion to EN 1092

The new flange standard EN 1092-1 for all flange types has been in effect since June 2002. Currently, the old standards are still in use. However, this will change since the old standards are no longer maintained and updated. New standards will exclusively refer to EN 1092.

AFRISO flanges

AFRISO usually ships type B1 flanges as per EN 1092.
This flange type differs from the former type C flanges as per DIN 2630 only in terms of the surface quality of the sealing surface. Flanges according to the old standard are available upon request.

		OLD (DIN 25../26..)			NEW (EN 1092-1)	
Flanges	**Sealing surface**	**Type**	**Standard**	**R_z (µm)**	**Type**	**R_z (µm)**
Flat		A B	DIN 2573 DIN 2576	– 40 – 160	A	12.5 – 50
Raised face	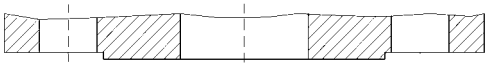	C D E	DIN 2630 to DIN 2638	40 – 160 40 16	B1 * B2 **	12.5 – 50 3.2 – 12.5
Tongue Groove	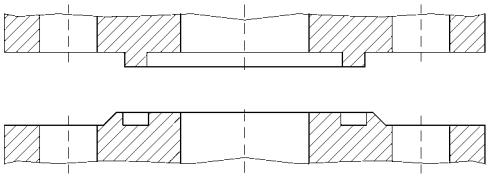	F N	DIN 2512		C D	3.2 – 12.5
Spigot Recess	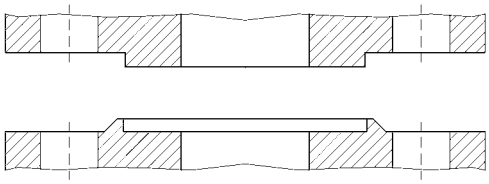	V 13 R 13	DIN 2513		E F	12.5 – 50
Spigot Recess	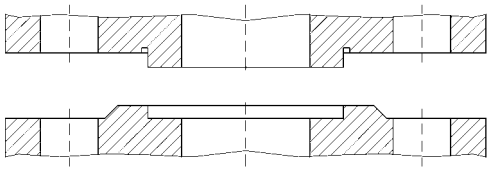	V 14 R 14	DIN 2514 for O rings		H G	3.2 – 12.5

* Typically PN 2.5 to PN 40 ** Typically PN 63 and PN 100

12

Stainless steel – international comparison of grades

Material no.	DIN	AISI
1.4301	X 5 CrNi 18 10	304
1.4305	x 8 CrNiS 18-9	303
1.4310	x 12 CrNi 177 / x 10 CrNi 188	301
1.4401	X 5 CrNiMo 17 123	316
1.4404	X 2 CrNiMo 17 132	316 L
1.4435	X 2 CrNiMo 18 143	316 L
1.4462	X 2 CrNiMoN 22 53	318 L
1.4542	X 5 CrNiCuNb 16-4	630
1.4571	X 6 CrNiMoTi 17 122	316 Ti
1.4541	X 6 CrNiTi 18-10	321

DIN: Deutsches Institut für Normung

AISI: American Iron Steel Institute

Conversion table for standard pressure units

Unit	bar	mbar	Pa	kPa	MPa	kp/mm²	kp/cm²	atm	mmHg	mWC	mmWC	psi	"H₂O	"Hg
1 bar	1	1000	100000	100	0.1	0.01019716	1.019716	0.986923	750.062	10.19716	1019.716	14.50377	401.463	29.53
1 mbar	0.001	1	100	0.1	0.0001	0.0001019716	0.001019716	0.000986923	0.750062	0.01019716	10.19716	0.01450377	0.401463	0.02953
1 Pa	0.00001	0.01	1	0.001	0.000001	0.0000010197	0.0000010197	0.0000009869	0.00750062	0.0001019716	0.1019716	0.0001450377	0.00401463	0.0002953
1 kPa	0.01	10	1000	1	0.001	0.0001019716	0.01019716	0.00986923	7.50062	0.1019716	101.9716	0.1450377	4.01463	0.2953
1 MPa	10	10000	1000000	1000	1	0.1019716	10.19716	9.86923	7500.62	101.9716	10197.16	145.0377	4014.63	295.3
1 kp/mm²	98.0665	98066.5	9806650	9806.65	9.80665	1	100	96.7841	73555.9	1000	1000000	1422.3344	39370.08	2895.9016
1 kp/cm²	0.980665	980.665	98066.5	98.0665	0.0980665	0.01	1	0.967841	735.559	10	10000	14.223344	393.7008	28.959016
1 atm	1.01325	1013.25	101325	101.325	0.101325	0.01033227	1.033227	1	760	10.33227	10332.27	14.6959	406.38858	29.92126
1 mmHg	0.001333224	1.333224	133.3224	0.1333224	0.000133322	0.0001359951	0.001359951	0.001315789	1	0.01360	13.60	0.019336	0.53524	0.03937
1 mWC	0.0980665	98.0665	9806.65	9.80665	0.00980665	0.001	0.1	0.0967841	73.556	1	1000	1.4223274	39.37008	2.8959016
1 mmWC	0.000098067	0.0980665	9.80665	0.00980665	0.0000098067	0.000001	0.0001	0.0000967841	0.073556	0.001	1	0.001422327	0.03937008	0.002895902
1 psi	0.06894757	68.94757	6894.757	6.894757	0.006894757	0.0070307	0.070307	0.068046	51.715217	0.70307	703.07	1	27.68	2.03529
1 "H_2O	0.00249089	2.49089	249.089	0.249089	0.000249089	0.0000254	0.00254	0.002458317	1.86832	0.0254	25.4	0.03613	1	0.07356
1 "Hg	0.0338639	33.8639	3386.4	3.3864	0.0033864	0.0003453 12	0.0345312	0.03342104	25.4	0.345316	345.316	0.49115	13.595	1

AFRISO

Information on the Pressure Equipment Directive (PED) 2014/68/EU

The European Pressure Equipment Directive (PED) came into force on May 30, 2002. The following paragraphs provide some information on the Directive itself and on our activities within the framework of this Directive.

- AFRISO-EURO-INDEX GmbH pressure gauges with a full scale value of > 0.5 bar are subject to the Pressure Equipment Directive and meet the appropriate requirements.
- Since the future application conditions of most pressure gauges are normally not completely known at the time of manufacture, we always manufacture our products in accordance with the most stringent criteria (gases of group 1).
- This way, our pressure gauges with a full scale value of 200 bar receive a CE mark according to the conformity assessment procedure.
- Pressure gauges with a connection flange of > DN 25 receive a CE mark with a full scale range of 0.5 bar and greater.
- The CE mark is attached to the outside of the housing (type designation plate).
- A declaration of conformity is provided on request.
- Detailed operating instructions and the appropriate data sheets are available at www.afriso.com. They can also be sent to you on request.
- Pressure gauges with a full scale value of less than 0.5 bar and loose chemical seals do not fall under the PED and must not carry a CE mark.
- Pressure gauges with a full scale value of between 0.5 bar and 200 bar fall under "Good Engineering Practice" and must not carry a CE mark (section 3, paragraph 3).
- We are not authorised to CE mark pressure gauges without a company name or a company logo.
- Pressure gauges which are used as a part of a safety system installed to protect against exceeding permissible limit values (equipment parts with a safety function) are treated separately.
- Our pressure gauges comply with the European Standard EN 837-1 and are manufactured and tested according to the appropriate requirements.

Selection criteria/safety considerations for pressure gauges as per EN 837-2

Medium	Liquid							
Housing	Without filling				With filling			
Nominal size	40/50/63/80		100/160/250		40/50/63/80		100/160/250	
Range bar	≤ 25	> 25	≤ 25	> 25	≤ 25	> 25	≤ 25	> 25
Code for minimum safety version	0	0	0	0	S1	S1	S1	S1
AFRISO type designation	All	All	All	All	D6/D7/D8	D6/D7/D8	D7/D8	D7/D8

Medium	Gas or steam (attention: not applicable to oxygen + acetylene*)							
Housing	Without filling				With filling			
Nominal size	40/50/63/80		100/160/250		40/50/63/80		100/160/250	
Range bar	≤ 25	> 25	≤ 25	> 25	≤ 25	> 25	≤ 25	> 25
Code for minimum safety version	0	S2	S1	S3	S1	S2	S1	S3
AFRISO type designation	All	"A"	D4/D9	RF 100/160 Si D4x2	D6/D7/D8	"B"	D6/D7/D8	RF 100/160 Si D8x2

Explanations of key:

"A" RF 63 Ch D 9x2, RF 63 Si D 4x2, RF 50/63 ST, RF 50/63 GT, RF 63 MK/IK D 3x2
"B" RF 63 D 7x2, RF 63 Si D 8x2

0 Pressure gauges without blow-out
S1 Pressure gauges with blow-out
S2 Safety pressure gauges without solid baffle wall
S3 Safety pressure gauges with solid baffle wall (for higher safety level)

Note 1:
Pressure gauges for oxygen and acetylene must meet the requirements for safety pressure gauges (NS 40 – 80 S2, NS 63/100/160 S3).

Note 2:
Pressure gauges with glycerine filling must not be used for oxygen or other oxidation process fluids. High-concentration fluorine liquids and chlorinated liquids (for example, halocarbon) can be used for such applications.

Note 3:
This table contains the standard safety version with the corresponding keys. Users must take into consideration any information they have concerning their special requirements and may also use safety pressure gauges at pressures below than 25 bar.

i

Silicone-filled pressure measuring instruments may not be used in production facilities for paint and lacquer and in paint shop environments.

Selection criteria/safety considerations for pressure gauges as per EN 837-2

Pressure gauges for oxygen and acetylene

Only safety pressure gauges (S2 and S3) may be used.
All materials for wetted parts (parts coming into contact with oxygen or acetylene) must comply with EN 29539.

Pressure gauges for oxygen

The Bourdon tube and other wetted parts must be free from oil and grease. Only lubricants suitable for oxygen at maximum operating pressure may be used.

The dial must bear the word "oxygen" in English and the international symbol for "free from oil and grease" (symbol 0248 according to ISO 7000 with the "oil prohibited" symbol):

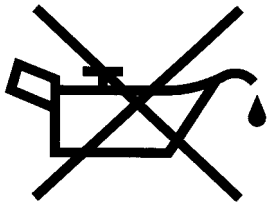

Oxygen and acetylene

	NG 40 – 80 S 2/S 3	NG 100 – 250 S 3
Version	RF 50 ST RF 50 GT RF 63 ST RF 63 GT RF 63 MK/IK D 3x2 RF 63 Si D 4x2	RF 100 Si D 4x2 RF 160 Si D 4x2

Checklist for enquiries – level measurement

Company:	Project/enquiry:
Quantity	
Requirements	☐ Level measurement with local display ☐ Level measurement without local display ☐ Min. level switch ☐ Max. level switch ☐ Level control ☐ Other:
Preferred measuring principle	Level detection: ☐ PTC thermistor ☐ Conductivity ☐ Vibration ☐ Rotary paddle ☐ Capacitance ☐ Ultrasonic Continuous measurement: ☐ Mechanical ☐ Pneumatic ☐ Capacitance ☐ Hydrostatic ☐ Ultrasonic ☐ Guided micropulse (TDR) ☐ Magnetostrictive
Required outputs	☐ 4–20 mA ☐ 0–10 V ☐ HART ☐ RS 232 ☐ Limit level contacts, no. ☐ Other:
Required accuracy	
Medium to be measured	
Viscosity/density/granule size	
Dielectric constant (ε_r)	
Surface	☐ Calm Foam ☐ Yes, Thickness:_____ ☐ Turbulent ☐ No Water content:_____
Changing media	☐ Yes ☐ No
EX protection	☐ No ☐ Yes, EX zone _____
Approved overfill prevention system required	☐ No ☐ Yes, (WHG/TRbF)
Temperatures	T_{max} medium: T_{max} ambient:
Tank height / diameter	
Tank shape	☐ Cylindrical ☐ Rectangular ☐ Square ☐ Vertical ☐ Horizontal
Is the tank pressurised?	☐ Not pressurised ☐ Yes, max. pressure _____bar
Is the tank under vacuum?	☐ No ☐ Yes, max. vacuum_____bar
Required process connection	☐ G1B ☐ G1½B ☐ G2B ☐ Flange: ☐ Other:
Mounting type	☐ Top mounting ☐ Side mounting ☐ Other:
Location of tank	☐ Aboveground ☐ Underground ☐ Welded in basement
Tank material	
Are there stirrers, struts or other obstructions in the tank (please enclose sketch)	

Checklist for enquiries – thermometers

Company:	Project/enquiry:
Quantity	
Application	
Medium to be measured	
Version	☐ Bimetal thermometer ☐ Gas filled thermometer
Housing diameter	☐ 34 ☐ 50 ☐ 63 ☐ 80 ☐ 100 ☐ 160 ☐ 250
Range	
Connection position	☐ Bottom ☐ Back ☐ Every angle version
Connection type	☐ Plain ☐ Sep. screw-in thermowell ☐ Sep. weld-in thermowell ☐ DIN/EN thermowell ☐ Loose male connection ☐ Loose union nut ☐ Compression fitting, adjustable ☐ Fixed male connection Neck ☐ No ☐ Yes _____mm
Connection thread	☐ G ☐ NPT ☐ BSPT ☐ For welding ☐ ¼ ☐ ⅜ ☐ ½ ☐ ¾ ☐ Other:
Stem length	
Mounting for capillary type	☐ Wall bracket ☐ Back flange ☐ 3-hole fixing, panel mounting bezel
Capillary length	
Housing	☐ Plastic ☐ Sheet steel ☐ Stainless steel with push on bezel ☐ Stainless steel with bayonet bezel
Filling	☐ No filling ☐ Glycerine ☐ Silicone oil ☐ Other:
Stem material	☐ Brass ☐ Stainless steel ☐ Other:
Thermowell material	☐ Brass ☐ Steel ☐ Stainless steel ☐ Other:
Dial	☐ Single scale as per EN ☐ Dual scale: ☐ Special scale: Customer logo ☐ Yes ☐ No Manufacturer logo ☐ Yes ☐ No
Accuracy class	Class ☐ 1 ☐ 2 as per EN 13190
Electrical contacts (only for gas filled thermometers)	☐ No ☐ Magnetic spring contact ☐ Inductive contact ☐ Single ☐ Dual Switching function:
Other	

Checklist for enquiries – resistance thermometers

Company:	Project/enquiry:
Quantity	
Application	
Medium to be measured	
Temperatures	T_{max} medium: T_{max} ambient:
Pressure loads	Static: Dynamic: from to
Measuring range	
Sensor	☐ 1 x ☐ 2 x ☐ Pt 100 ☐ Pt 1,000 ☐ Other: ☐ Class B ☐ Class A as per IEC 751 ☐ 2-wire ☐ 3-wire ☐ 4-wire
Neck	☐ No ☐ Yes, length _____mm ☐ Material stainless steel 316 Ti ☐ Other material:
Installation length	_____mm
Process connection	☐ Fixed male connection ☐ Union nut ☐ Compression fitting ☐ G ☐ NPT ☐ M ☐ Other: ☐ ¼ ☐ ½ ☐ 18 x 1.5 ☐ 14 x 1.5 ☐ Other: ☐ Mounting flange ☐ Ø 41 mm ☐ Ø 80 mm, adjustable ☐ Clamp DN_____ ☐ DIN 11851 DN_____ ☐ Hygienic DN_____ ☐ Other:
Thermowell	☐ Weld-in thermowell as per DIN: ☐ Flanged thermowell, blind flange DN 25, PN 40 ☐ Other:
Material for process connection or thermowell	☐ Stainless steel 316 Ti ☐ Other:
Reduced measuring tip	☐ No ☐ Yes ☐ 6 mm ☐ 4 mm
Required connection head or electrical connection	
Transmitter installation	☐ No ☐ Yes, output signal ☐ 4-20 mA ☐ 0-10 V ☐ Measuring range of transmitter:
Other	

Checklist for enquiries – pressure gauges

Company:	Project/enquiry:
Quantity	
Application	
Medium to be measured	
Temperatures	T_{max} medium: T_{max} ambient: T_{min} medium: T_{min} ambient:
Pressure loads	Static: Dynamic: from to
Measuring system	☐ Bourdon tube ☐ Capsule element ☐ Diaphragm ☐ Magnetic piston ☐ Other: ☐ Spring diaphragm
Housing diameter	☐ 26 ☐ 40 ☐ 50 ☐ 63 ☐ 80 ☐ 100 ☐ 160 ☐ 250 mm" ☐ 4½"
Range	
Connection position	☐ Bottom ☐ Back ☐ Radial at _____o'clock
Connection thread	☐ G ☐ NPT ☐ BSPT ☐ ⅛ ☐ ¼ ☐ ⅜ ☐ ½ ☐ ¾ ☐ Other:
Mounting type	☐ Direct ☐ Clamp fixing ☐ Back flange ☐ 3-hole fixing, panel mounting bezel
Housing	☐ Plastic ☐ Sheet steel, black ☐ Sheet steel with clip-in window ☐ Stainless steel with bayonet bezel
Housing with blow-out	☐ Yes ☐ No ☐ Safety version S3
Filling	☐ Without ☐ Glycerine ☐ Silicone oil ☐ Other:
Window	☐ Plastic ☐ Instrument-grade glass ☐ Laminated safety glass Must be resistant to solvents ☐ Yes ☐ No Must be resistant to:
Wetted parts	☐ Brass ☐ Steel ☐ Stainless steel 316Ti/316 L ☐ Monel ☐ Other:
Special coatings (diaphragm)	☐ PTFE ☐ Other:
Measuring system helium-tested	☐ Yes qpv= 10^{-6} ☐ No
Dial	☐ Single scale as per EN ☐ Dual scale: ☐ Special scale: Customer logo ☐ Yes ☐ No Manufacturer logo ☐ Yes ☐ No
Accuracy class	☐ 0.25 ☐ 0.6 ☐ 1.0 ☐ 1.6 ☐ 2.5
Electrical contacts	☐ No ☐ Magnetic spring contact ☐ Inductive contact ☐ Reed contact ☐ Electronic contact ☐ 1 x ☐ 2 x ☐ 3 x ☐ 4 x Switching function:
Other	

Report
Function test liquid based leak detector LAS

Site of facility

Company

First name / last name

Street

Postcode / city

Product LAS 24, 39, 72 and 230
Technical Approval of the German Institute for Civil Engineering (DIBt) Z-65.24-381

Checklist

- ☐ Results of visual inspection of the system: Installation as per instructions, no visible damage.
- ☐ The system was tested by opening the test valve.
- ☐ The leak detection fluid escaped at a flow rate of at least 0.5 l/min.
- ☐ The level of the leak detection fluid is correct.

Notes

12

Date of test:

Specialised company (as per WHG (AwSV)):

Company

First name / last name

Street

Postcode / city

Signature/stamp

Report
Function test liquid based leak detector LAG

Site of facility

Company

First name / last name

Street

Postcode / city

Product

☐ LAG-13 KR CE, ÜHP

☐ LAG-14 ER approval: Z-65.24-1, EX5 11 02 15639 011, CE

Checklist

☐ Results of visual inspection of the system: Installation as per instructions, no visible damage.

☐ The system was tested by opening the test valve.

☐ The leak detection fluid escaped at a flow rate of at least 0.5 l/min.

☐ When the probe was removed, the device triggered visual and audible alarms.

☐ When the test button was pressed, the device triggered visual and audible alarms.

☐ The audible alarm can be acknowledged.

☐ The operation and alarm lamps function properly.

☐ The level of the leak detection fluid is correct.

Notes

Date of test:

Specialised company (as per WHG (AwSV)):

Company

First name / last name

Street

Postcode / city

Signature/stamp

Report
Function test vacuum type leak detector

Site of facility

Company

First name / last name

Street

Postcode / city

Product

☐ LAZ-04/1 (HV) ☐ Eurovac HV approval: Z-65.22-4, CE, ÜHP

☐ LAZ-04/3 (NV) ☐ Eurovac NV approval: Z-65.22-382, CE, ÜHP

Serial number

Measurement Measurements of the switching points yielded the following results:

Alarm on: _____ mbar Pump on: _____ mbar

Alarm off: _____ mbar Pump off: _____ mbar

Checklist

☐ Results of visual inspection of the system: Installation as per instructions, no visible damage.

☐ When the pressure dropped below the alarm threshold, the device triggered visual and audible alarms.

☐ When the test button was pressed, the device triggered visual and audible alarms.

☐ The audible alarm can be acknowledged.

☐ The operation and alarm lamps function properly.

☐ Condensate traps are installed at the lowest points of the hose lines.
The condensate traps have been emptied, if necessary.

Date of test:

Specialised company (as per WHG (AwSV)):

Company

First name / last name

Street

Postcode / city

Signature/stamp

Report
Function test pressure type leak detector

Site of facility

Company

First name / last name

Street

Postcode / city

Product

☐ Europress LAD-10 (approval: Z-65.23-3)

☐ Europress (approval: Z-65.23-3), CE, ÜHP

Serial number

Measurement Measurements of the switching points yielded the following results:

Alarm on: mbar Pump on: mbar

Alarm off: mbar Pump off: mbar

Checklist

☐ Results of visual inspection of the system: Installation as per instructions, no visible damage.

☐ When the pressure dropped below the alarm threshold, the device triggered visual and audible alarms.

☐ When the test button was pressed, the device triggered visual and audible alarms.

☐ The audible alarm can be acknowledged.

☐ The operation and alarm lamps function properly.

Date of test:

Specialised company (as per WHG (AwSV)):

Company

First name / last name

Street

Postcode / city

Signature/stamp

Report
Function test protection equipment against siphoning

Site of facility

Company

First name / last name

Street

Postcode / city

Product

☐ KAV, piston type anti-siphon valve — approval: Z-65.50-415

☐ MAV, diaphragm type anti-siphon valve — approval: Z-65.50-415

☐ Diaphragm valve against siphoning — approval: _____

Measurement

The function test was performed by means of the anti-siphon valve tester:

Measurement result: _____ bar

☐ Siphoning protection **works**

☐ Siphoning protection **does not work**

Measurement alternative: Test

☐ The function test was not performed. A test by simulation of a line leak was performed by opening at the lowest point of the oil line. No significant amount of oil escaped.

☐ **KAV only: The adjustment value was adapted to the current level in the tank prior to the test and reset to the maximum possible level after the test.**

Checklist

☐ Results of visual inspection: Installation as per instructions, no visible damage.

☐ The adjustment height was tested and lead-sealed.

☐ The fuel oil consumer was started to de-aerate the fuel line and then stopped.

Adjustment value

Adjustment value for safe height: _____

12

Notes

_____

_____

_____

_____

_____

Date of test:

_____

Specialised company (as per WHG (AwSV)):

Company

First name / last name

Street

Postcode / city

Signature/stamp

General Terms of Delivery

of AFRISO-EURO-INDEX GmbH · Lindenstraße 20 · 74363 Güglingen

§ 1 Validity

(1) All our deliveries, services and offers are exclusively made on the basis of the General Terms of Delivery. These General Terms of Delivery are part of all contracts with our contract partners (hereinafter referred to as "customers") we conclude pertaining to the deliveries or services provided by us.

(2) General terms and conditions of the customer shall only become part of the contract if we expressly consent to their validity in writing. This consent requirement shall apply in any and all cases, even if, for example, we carry out deliveries to the customer without expressly rejecting the customer's general terms and conditions even though we are aware of such terms and conditions.

(3) Our General Terms of Delivery shall only apply if the customer is a business person (§ 14 BGB, German Civil Code), a legal person of public law or a public-law fund.

(4) The General Terms of Delivery shall apply in particular to contracts covering the sale and/or delivery of movable goods ("goods"), regardless of whether we manufacture the goods ourselves or purchase them from suppliers (§§ 433, 651 BGB, German Civil Code). Unless otherwise agreed, the General Terms of Sale in the version valid at the time of the customer's order shall be deemed to be an outline agreement for future contracts of the same kind; we shall not be obliged to state their validity for each and every individual case.

(5) Individual agreements with the customer (including supplementary agreements, amendments and modifications) which have been made in individual cases shall always take precedence over these General Terms of Delivery. The contents of such agreements shall be subject to a written contract and/or our written confirmation, subject to proof of the contrary.

(6) Material declarations and notifications which are to submitted to us by the customer after conclusion of contract (e.g, deadlines, notification of defects, declaration of withdrawal or reduction) must be made in writing to be effective.

(7) Any reference to the validity of statutory provisions is only for the purpose of clarification. Even without such a clarification, therefore, the statutory provisions shall apply if and to the extent that they have not been modified or expressly excluded in these General Terms of Delivery.

§ 2 Offer and conclusion of contract

(1) All our offers are free and non-binding, unless they are expressly marked as binding or contain a certain acceptance period. We shall have the right to accept orders within a period of fourteen days after receipt.

(2) The legal relationship between us and the customer shall be governed solely by the written purchase agreement, including these General Terms of Delivery. The written purchase agreement contains all agreements between the parties with regard to the contract. Any communication by us not made in writing prior to the conclusion of this contract is legally non-binding; any agreements of the contract parties not made in writing shall be replaced by the written contract, unless it is expressly stated that they shall be binding.

(3) Amendments and modifications to the agreements, including these General Terms of Delivery, must be made in writing in order to be effective. With the exception of managers or authorized signatories, our employees are not entitled to make any differing verbal agreements. Transmission via telecommunication systems, in particular via fax or via e-mail, shall be deemed to be a sufficient instrument in writing, provided that the copy of the signed declaration is transmitted.

(4) Any information or representation whatsoever on our part with regard to the delivery or service (such as, but not limited to weights, dimensions, performance values, loads, tolerances and technical data) shall be deemed to be approximate, unless the usability for the purpose provided by the contract requires accurate conformity. Such information or representations do not constitute guaranteed characteristics, but descriptions or markings of the delivery or service. Any standard deviations and deviations which are made according to statutory provisions or which represent technical improvements, as well as the replacement of components by equivalent parts, are permissible if they do not impair the usability for the purpose intended by the contract.

(5) We reserve the right to property or copyright to all offers and cost estimates submitted by us as well as to all drawings, illustrations, calculations, brochures, catalogues, models, tools and other documents and equipment provided to the customer. The customer shall not be permitted to disclose these objects, as such or in content, to third parties, to make them known, to use them himself or through third parties or to reproduce them. At our request, he shall be obliged to completely return such objects to us and to destroy any copies produced if they are no longer required by him in the normal course of business or if negotiations do not lead to the conclusion of a contract. Storage of data provided electronically for the purpose of standard data backup shall be the only exception to this.

§ 3 Prices and payment

(1) The prices apply to the scope of services and delivery specified in the order confirmations. Additional or special services will be charged separately. The prices are in EURO ex works plus packaging, the applicable value added tax, and, for export deliveries, customs duties as well as fees and other public charges.

(2) If the agreed prices are based on our list prices and if the delivery is to be effected more than four months after conclusion of the contract, our list prices valid at the time of delivery shall apply (minus any percentage discount or fixed discount that may have been agreed).

(3) Invoices shall be payable within 30 days from the invoice date without any deduction, unless otherwise agreed in writing. The date of unconditional credit on our business account shall be decisive for payment in due time. Payment by check shall be excluded, unless agreed separately, as the case may be. If the customer does not pay by the due date, an interest of 5 % per year shall be due on the amounts payable; we shall be entitled to claim higher interest and further damages.

(4) Any set-off with counterclaims of the customer or retention of payments due to such claims shall only be permissible if and to the extent that such counterclaims are undisputed or asserted by a court.

(5) We shall be entitled to deliver or provide outstanding deliveries or services after prepayment or provision of security if, after the conclusion of the contract, we become aware of circumstances which substantially reduce the creditworthiness of the customer and which jeopardise the payment of our outstanding claims arising from the contract against the customer (including claims from other individual contracts pursuant to the same outline agreement).

§ 4 Delivery and delivery period

(1) Deliveries are made ex works.

(2) Time limits and deadlines for deliveries and services mentioned by us are only approximate, unless a fixed deadline or a fixed date has been explicitly assured or agreed. If shipping has been agreed, delivery periods and delivery dates refer to the date of transfer to the forwarding agent, freight carrier or to any other third party in charge of shipping.

(3) Without prejudice to our rights arising from default of the customer, we shall be entitled to demand from the customer an extension of delivery and performance periods or a postponement of delivery and performance dates for the period during which the customer does not meet his obligations pursuant to the contract.

(4) We shall not be liable for impossibility of delivery or for delays in delivery, if such impossibility or delay is caused by force majeure or other events unforeseeable at the time of the conclusion of the contract which are beyond our control or for which we cannot be held responsible or which we have not caused (e.g. disruptions of operations of any kind, difficulties in procuring materials or energy, transport delays, strikes, lawful lockouts, lack of labour, energy or raw materials, difficulties in procuring necessary regulatory approvals, governmental measures, or incorrect or delayed supply by suppliers. Insofar as such events make the delivery or service substantially more difficult or impossible and the hindrance is not only of temporary duration, we are entitled to withdraw from the contract. In the case of hindrances of a temporary nature, the delivery or performance periods shall be extended or the delivery or performance dates shall be postponed by the period of the hindrance plus a reasonable start-up period. If, as a result of the delay, the customer cannot reasonably be expected to accept the delivery or service, the customer shall be entitled to withdraw from the contract, which is to be performed immediately by an instrument in writing.

(5) We shall be entitled to deliver and provide partial deliveries and partial services only:
- if the partial delivery is reasonable for the customer and sufficient consideration is given to his legitimate interests,
- if the delivery of the remaining ordered goods is assured and
- if, as a result, the customer does not incur any substantial additional costs or additional efforts (unless we are willing to pay for such costs).

(6) If we are in default with a delivery or service or if a delivery or service is impossible for any reason whatsoever, our liability for compensation shall be limited pursuant to provision § 8 of these general Terms of Delivery.

§ 5 Place of performance, shipping, packaging, passage of risk, acceptance

(1) The place of performance for all obligations resulting from the contract shall be the registered office of our company in Güglingen, unless other agreements have been made. If the installation is part of the contract, the place of performance shall be the place at which the installation is to be performed.

(2) The type of shipping and packaging are subject to our discretion. The cost of shipping and packaging shall be borne by the customer. If the customer requires drop shipping delivery, we shall charge a processing fee of EUR 10.00 for each delivery.

(3) In cases of small orders with a net purchase value of less than EUR 100.00, we will charge a processing fee of EUR 15.00 in addition to shipping and packaging.

(4) The passage of risk to the customer shall be the point in time of the transfer of the good to be delivered (the beginning of the loading process being decisive) to the forwarding agent, freight carrier or to any other third party in charge of shipping. This shall also apply in the case of partial deliveries or if we have undertaken other obligations (e.g. shipping or installation). If the shipment or the transfer is delayed for a reason caused by the customer, the transfer of risk shall be the day on which the good to be delivered is ready for shipment and we have notified the customer to this effect.

(5) Storage costs incurred by us after transfer of risk shall be borne by the customer. If we store the goods to be delivered, the storage costs amount to 0.25% of the invoice amount of the delivered goods per completed week. We reserve the right to assert and prove further or lower storage costs.

(6) We shall provide for transportation insurance of the consignment.

(7) If acceptance has to take place, the purchase item shall be deemed accepted if:
- the delivery and, provided we also have to perform installation, the installation are completed,
- we have communicated this to the customer with reference to the deemed acceptance in accordance with this provision § 5 (7) and have prompted the customer to accept the delivery,
- 12 business days have passed since the delivery or installation, or the customer has begun to use the purchased item (e.g. a delivered plant has been put into operation) and, in this case, six workdays have passed since delivery or installation, and
- within this period, the customer has refused acceptance for any reason other than for a defect of which the customer has notified us and which substantially impedes or make impossible the use of the purchased item .

§ 6 Warranty, material defects, acceptance of the disposal obligation by the customer

(1) The warranty period shall be one year from the date of delivery or, if acceptance is required, from the date of acceptance. This period shall not apply to claims for damages on the part of the customer resulting from injury to life, body or health or from wilful or grossly negligent breach of duty by us or our vicarious agents, which are subject to the limitation periods according to the statutory provisions.

(2) The goods delivered must be carefully inspected immediately after delivery to the customer or to the third party designated by the customer. With regard to obvious defects or other defects which would have been recognizable in the case of an immediate, careful examination, they shall be deemed to be accepted by the customer if we do not receive written notification of defects within seven workdays after delivery. With regard to other defects, the delivery items shall be deemed to have been accepted by the customer if the notice of defect does not reach us within seven workdays after the date of detection of the defect; if the defect was already recognizable by the customer at an earlier point in time in normal use, this earlier point in time shall be decisive for the beginning of the complaint period. Upon request by us, a rejected delivery item must be returned to us free of freight charges. In the case of a justified complaint, we shall reimburse the costs of the least expensive type of shipping; this shall not apply if the costs increase because the delivery item is located at a place other than the place of the intended use.

(3) In the case of material defects of the goods delivered, we shall first be obliged and entitled to rectify or replace the goods within a reasonable time. In case of failure, i.e. impossibility, unreasonableness, refusal or unreasonable delay of the improvement or replacement delivery, the customer shall be entitled to withdraw from the contract or to reasonably reduce the purchase price.

(4) Insignificant or typical variations in colour, dimensions, weight and quality shall not be considered to be defects of the delivery items

(5) If a defect is the result of fault on our part, the customer shall be entitled to claim damages under the conditions stipulated in provision § 8 hereto.

(6) In the case of defects of components of other manufacturers, which we cannot remedy for license or actual reasons, we will, at our discretion, assert our warranty claims against the manufacturers and suppliers on behalf of the customer or assign them to the customer. In the case of such defects, there shall only be warranty claims against us subject to the other conditions and according to the provisions of these General Terms of Delivery and only if the aforementioned claims against the manufacturer and suppliers could not be enforced or if such enforcement is futile, for example, due to insolvency. During the duration of the legal dispute, the period of limitation of the customer's warranty claims against us shall be suspended.

(7) The warranty shall be void if the customer modifies the delivery item without our consent or has it modified by a third party and such modification renders the rectification of the defect impossible or unreasonable. In any such case, the customer shall bear the additional costs arising from such modification for rectification of the defect.

(8) If, in individual cases, a delivery of used items is agreed with the customer, such delivery shall be performed under exclusion of any warranty for material defects.

(9) The customer shall be obliged to dispose of the delivered goods when they are no longer used at his own cost and in full compliance with all pertinent regulations. The customer shall indemnify us from the obligations pursuant to § 10, section 2 of the German Electronic Equipment Act (obligation of manufacturers to take back their products) and from any claims of third parties related to this.

The customer shall contractually oblige any other commercial third party to which the customer transfers the delivered goods to dispose of such goods according to the pertinent regulations when such goods are no longer used. Our claim to the above transfer of obligation/indemnification through the customer shall be extended by a period of limitation of two years after the final termination of the usage of the delivery item. The two-year period of suspension of the limitation shall not begin until we receive a written notice from the customer stating that he has ceased to use the device.

§ 7 Infringement of property laws

(1) Pursuant to this provision § 7, we shall ensure that the delivery item is free from industrial property rights or third-party copyrights. Each contract partner shall immediately notify the other contract partner in writing if claims with regard to the infringement of such rights are asserted against him.

(2) In the event that the delivery item infringes an industrial property right or copyright of a third party, we shall, at our discretion and at our expense, alter or replace the delivery item in such a way that no rights of third parties are infringed, but the delivery item continues to fulfil the contractually agreed functions; or we shall enter into a license agreement in order to obtain the right to use the delivery item for the customer. If we should not be able to succeed within a reasonable period, the customer shall be entitled to withdraw from the contract or to reasonably reduce the purchase price. Any claims for damages of the customer are subject to the restrictions of provision § 8 of these General Terms of Delivery.

(3) In the case of infringements of laws by products of other manufacturers delivered by us, we shall, at our discretion, assert our claims against the manufacturers and suppliers on behalf of the customer or assign such claims to the customer. In these cases, there shall only be claims against us subject to the provisions of this provision § 7 and only if the aforementioned claims against the manufacturer and suppliers could not be enforced or if such enforcement is futile, for example, due to insolvency.

(4) If an order is to be filled (designs, etc.) according to customer specifications, drafts or instructions, the customer shall be fully responsible for obtaining all rights of commercial exploitation of the property rights that may be contained in his specifications, drafts or instructions. If the execution of an order according to specifications, etc. of the customer violates third-party property rights or labelling obligation, the customer shall undertake to indemnify us from any resulting claims for compensation, compensation for expenses and / or reimbursement of third parties.

§ 8 Liability for damages in case of fault

(1) Our liability for damages, irrespective of the legal grounds, in particular from impossibility, delay, defective or incorrect delivery, breach of contract, breach of obligations in the case of contractual negotiations and tort, shall be limited subject to the provisions of this provision § 8.

(2) We shall not be liable in the case of simple negligence on the part of our organs, legal representatives, employees or other vicarious agents, to the extent that this is not a violation of contractual obligations. Essential with regard to the contract are the obligation to deliver and/or install the delivery item in good time, its freedom from deficiencies in law and its freedom from defects which impair its functionality or usability more than insignificantly, as well as advisory, protection and custodial obligations which allow the customer to use the delivery item as per contract, or which serve the protection of the health or life of the customer's personnel or the protection of his property against substantial damage.

(3) To the extent that we are liable for damages pursuant to provision § 8 (2) hereto, such liability shall be limited to damages which we have foreseen at the time of conclusion of the contract as a possible consequence of an infringement of the contract or which we should have foreseen applying due diligence. Indirect damages and consequential damages which are the result of defects of the delivery item shall only be subject to damages o the extent that such damage is typically to be expected when the delivery item is used as intended.

(4) In the case of liability for simple negligence, our obligation to indemnify for damage to property and consequential financial loss shall be limited to the amount covered by our liability insurance and standard in our industry, even in the case of a breach of essential contractual obligations. Upon request, we will gladly provide the customer with a corresponding insurance confirmation stating the amount covered by the liability insurance carrier.

(5) The above exclusions and limitations of liability shall apply to the same extent on behalf of our organs, legal representatives, employees and other vicarious agents.

(6) If we provide technical information or consultancy services and such information or services are not a part of the scope of services agreed upon by contract and owed by us, this shall be free of charge and without any liability whatsoever.

(7) The limitations of this provision § 8 shall not apply to our liability for intentional conduct, for guaranteed characteristics, for injury to life, body or health or pursuant to the German Product Liability Act (Produkthaftungsgesetz).

§ 9 Retention of title

(1) We retain the title to the sold goods until we have received full payment of all our present and future receivables arising from the purchase contract and from an ongoing business relationship (secured claims).

(2) Prior to full payment of the secured claims, the goods subject to retention of title shall neither be pledged to third parties nor transferred to third parties for security. The customer shall notify us in writing immediately if an application for the opening of insolvency proceedings is filed or if third parties attempt to seize the goods under retention of title (e.g. by means of distraint or attachment).

(3) In the case of a breach of contract by the customer, in particular in the event of non-payment of the purchase price due, we shall be entitled to withdraw from the contract pursuant to the statutory provisions and to reclaim the goods as a result of retention of title and withdrawal. If the customer does not pay the purchase price due, we shall only be entitled to assert these rights if we have previously set the customer a reasonable deadline for payment without success, or if such a deadline is not required pursuant to the statutory provisions.

(4) The customer shall be entitled to resell and/or process the goods under retention of title in the ordinary course of business, subject to revocation pursuant to (c) below. In this case, the following provisions shall apply in addition.
(a) The retention of title shall cover the full value of the products resulting from processing, mixing or combining our products; we shall be deemed the manufacturer. If, in the case of processing, mixing or combining with goods of third parties, their rights of ownership remain, we shall acquire co-ownership to the ratio of the invoice amounts of the processed, mixed or combined goods. The same provisions that apply to the goods delivered under retention of title shall apply to the resulting new product.
(b) The customer shall assign to us, as a security, the claims arising against third parties from the resale of the goods or of the product in whole or to the amount of our possible co-ownership pursuant to the preceding paragraph. We accept the assignment. The obligations of the customer pursuant to provision § 9 (2) hereto shall also apply in respect of the assigned claims.
(c) The customer shall remain entitled to collect the claim in addition to us. We undertake not to collect the claim as long as the customer meets his payment obligations, as long as the customer performs and as long as we do not assert the retention of title by exercising a right pursuant to provision § 9 (3) hereto. If any of the above conditions are not met, we shall be entitled to request the customer to notify us of the assigned claims and the corresponding debtors and provide us with any information and the appropriate documents necessary for us to collect such claims, and to notify the debtors (third parties) of such assignment. In this case, we shall also be entitled to revoke the customer's authorization to resell and process the goods subject to retention of title.
(d) If the liquidable value of the securities exceeds our claims by more than 10 %, we shall, at the customer's request, release securities at our discretion.

§ 10 Final clause

(1) If the customer is a merchant, a legal person under public law or a public-law fund or if the customer has no general court of jurisdiction in the Federal Republic of Germany, the place of jurisdiction for all disputes arising from the business relationship between us and the customer shall be our registered office in Güglingen or the registered office of the customer. However, in such cases, Güglingen shall be the exclusive place of jurisdiction for actions against us. This provision does not affect statutory provisions regarding exclusive places of jurisdiction.

(2) The relations between us and our customers are subject exclusively to the laws of the Federal Republic of Germany. The United Nations Convention on Contracts for the International Sale of Goods (CISG) of April 11, 1980 shall not apply.

(3) If and to the extent that the contract or these General Terms of Delivery contain gaps in the provisions, those statutory provisions shall be deemed to have been agreed upon which the contract parties would have agreed upon in view of the economic objectives of the contract and the purpose of these General Terms of Delivery if they had been aware of the gaps.

(4) Any use and interpretation whatsoever of these General Terms of Delivery shall be based on the German version herof, not on this translation into the English language.

Note

The customer shall be deemed to have been notified that we store data relating to the contractual relationship pursuant to § 28 Bundesdatenschutzgesetz (German Federal Data Protection Act) for the purpose of processing such data and that we retain the right to disclose such data to third parties (e.g. insurance companies) if and to the extent such disclosure is required to perform the contract.

November 2016

Index

A

Accessories for

- Alarm units 80–86
- Anti-siphon valves 135
- Fuel oil de-aerators/oil filters 146
- Leak detectors 53
- Level sensors 30
- Panel mounting and wall mounting 83
- Rainwater harvesting 295–297
- Solar pump assemblies 196–198
- Solar thermal equipment 193–198

Accessories for pressure gauges 327–331

Actuator AVD, wireless 107–108

Actuators ARM 175

Actuators for manifold systems 211

AdBlue® – inner lining 56

AdBlue® – level indicator 11

Additional alarm unit 86

AF-S inner linings for liquid fertiliser AHL, AdBlue® 56

AFRISO Smart Home-System 90

AFRISOhome – mobile app 116

12 AFRISOhome gateway HG 01 117

AFRISO WATCHDOG-LINE (alarm units) 64–68

- Backup controller kit RENA 297
- Boiler water low level alarm WMS 154
- Digital tank contents indicator DTA 10 / DTA 20 E 12, 98
- Gas detector 2.1 79
- Leak detectors Eurovac 50–52
- Leak detectors LAG 47–48
- Level indicator TankControl 10 14
- Minimelder/Maximelder-R 18
- Oil alarm unit OM 5 71
- Oil-on-water detector ÖAWD-8 73
- Oil/water alarm unit ÖWU 72
- Oil/water alarm unit ÖWWG 3 69–70
- Overfill prevention system UFS 01 (WHG) 37
- Temperature/pressure measuring instrument TDM 51 F 97
- Transducer UFS 01 (WHG) 37
- Water alarm unit WWG 75
- Water valve WaterControl 01 96

Air separators 163, 165

Air-Control 152

AK-S tank protection package (inner linings) 55

Alarm units

- WATCHDOG-LINE 64–73, 75, 79
- Wireless module TCM 320 115
- With EnOcean® wireless 119

Angled quick air vent 158

Anode tester AT1 274

Anodes 273-274

Antenna, EnOcean® wireless 115

Anti-siphon valve tester 135

Anti-siphon valves 132–134

Anti-tamper cap valves 166

App AFRISOhome 116

AR-S inner lining for rainwater harvesting 57

AR-SM rainwater lining 58, 296

ARM actuators 175

ARV mixing valves 173

ATM mixing valves 285

Automatic fuel oil de-aerators 139–145

Automatic radiator valves 245–248

B

Backup controller kit RENA 297

Base kit universal withdrawing system 26

Base module BM Cositherm® 199–206

Battery-operated tank contents gauge DTA 12, 98

BlueLine service instruments 394

Boiler filling and drain valves KFE 169

Boiler manifolds KSV 176

Boiler safety group assemblies KSG 160, 161

Boiler safety group assembly BFK 12, DN 15 289

Boiler water low level alarm 154–155

Bourdon tube pressure gauges 305–324

Burner controlled motorised boiler room vent 152

Bypass valve DÜ 168

C

Cable extension fitting KVA 30

Cap for dipstick pipe 127

CAPBs® sensor modules 396-401

Caps 30, 126

Capsule pressure gauges 325

Chain anodes 274

Charging unit for storage tank charging 185

Check valves (drinking water) 271

Chimney sleeve 153

Circulation controller EC 1 287

Circulation lance ZL 2 286

Circulation switch ZS 2 288

Circulation system for hot water connection WZS 275–281

CO_2 Sensor 109

Collector tank for solar liquid 198

Combination blocks for compact radiators 240, 248

Combination blocks with thermostat 256

Combined air/flow filter 165

Combined alarm light and horn 84

Combined pressure gauge/thermometer 345–351

Combined thermometer/pressure gauges/ thermometer-hydrometers 349–351

Combined thermometer/pressure gauges THMK 345–347

Combustion controller FR 1 156

Condensate bar 53

Condensate trap KG 2 10

Conductivity water sensors 94–95

Connection assembly for expansion vessel GAK 162

Connection nipple for pressure gauges 331

Control head, wireless 107–108

Control heads for radiators 260, 107–108

Control thermostats 372

Controller module F2A Cositherm® 199–206

Conversion kit float kit 129

Conversion kit for withdrawal systems 129

Conversion kit shut-off valve 129

Conversion kits for oil tanks 295

CosiTherm® single room temperature controller 199–206

Coupling socket/plug 34

D

DA 10/12/14 17

Damping device 330

Detectors 64–67

Diaphragm safety valves 167, 196, 272

Diaphragm type anti-siphon valve MAV 134

Differential pressure bypass valve DÜ 168

Digital display units DA 10/12/14 17

Digital tank contents indicators 12–13, 98

DIN rail clip 83

Dipsticks 6

Display and control units 17

Domestic water station HWSC 291

Door contact, wireless 112

Draft stabiliser WZB-1 153

Drinking water mixing valves 285

Drip pan 83

DTA 10 – battery-operated tank contents indicator 12

DTA 20 E – tank contents indicator, wireless 98

Dual-line filters for fuel oil 137

Dynamic thermostat valves Vario-DP 245

E

Electro-thermostatic actuators TSA 211

Electronic boiler water low level alarm 155

Energy Harvesting 90

EnOcean® wireless module TCM 320 115

EnOcean® wireless, smart home products

- Actuators 107–108
- Alarm units 119
- CO_2 sensor 109
- Door/window contact 112
- Gateway 117
- Heat detector 100
- Leak detectors 52–54, 60
- Level switches 18
- Radiator actuators 107–108
- Repeater 115
- Rocker switches 111
- Room temperature sensor 104
- Siren 113–114
- Smoke alarm 99
- Tank contents indicators 98
- Temperature and humidity sensor 106
- Temperature and pressure measuring instrument 97
- Temperature control 101
- Transmitters 110
- Transmitters, temperature/humidity 105
- Water sensors 92–95
- Water valves 96

Equipment for drinking water supply 270–294

Equipment for rainwater harvesting 295–297

Euroflex 128

Euroflex with tank heating 130

Europress 60

Eurovac NV/HV 50–52

EX products

- Leak detector LAG-14 ER 48
- Leak detector, sight glass principle LAS 24 EK 46
- Level probe 16, 40
- Level sensor testers ATEX-certified 36
- Level sensors (EX) 32–33
- Overfill prevention system (Zone 0) 40

Extension module Zigbee 118

Extension universal withdrawal system 26

F

Felt sieve 138

Filler caps 127

Filler caps 30, 126

Filler caps for level sensors 30, 126

Filling and flushing unit solar 196

Filling fittings FA/FAM 169

Filter cups 138

Filter spanners 146

Filter spare parts (fuel oil) 138

Filters for drinking water 271, 290–294

Filters for fuel oil 136

Fittings for level sensors 34

Flex pipe 196

Floating probe SWS 73, 81

FloCo-Top-1 145

FloCo-Top-2 142

Flood hazard areas, suitable products

- Anti-siphon valves 133–134
- Cable extension fittings 30
- Caps for dipsticks, filler caps 127
- Condensate traps 10
- Fuel oil de-aerators 140–145
- GWG level sensor filler caps 30, 126
- Level indicators 7–11, 12–16
- Level sensors 28–33
- Mounting kits for level indicators 10
- Overpressure device 126
- Pressure compensation unit 131
- Tank withdrawal systems 128–130
- Vacuum gauges 146

Floor water probe BWS 10-1 81, 115

Floor water probe BWS 10-2 95, 115

Flow filters 165

Flow meter DFM 170–172

Flow-Control 140

Flue gas thermometers 355

Frames for panel mounting 83

Fuel oil alarm unit HMS 74

Fuel oil de-aerators 139

Fuel oil filters 137

Fuel oil filters Optimum/Opticlean 138

Fuel oil withdrawal systems 128

G

GAMPPER valves 220

Gas detector GM 2.1 79

Gas sensors 80

Gateway AFRISOhome 117

GPG 01 – level sensor tester 35

GWG level sensor chain 24

H

Hand-held suction pump for fuel oil 146

Heat detector AHD 20 100

Heating pump assemblies PrimoTherm® 177–192

High-temperature fuel oil de-aerators 141

High-temperature level probes 39

HMG – measuring instruments for hydraulic balancing 230–231

HMS – fuel oil alarm unit 74

Horns 84

Hose connectors 8, 10, 59

Hot water circulation system WZS 275–281

Hot water mixing valves 285

Hybrid quick air vents 159

Hydraulic balancing 224

HydroFox® DMU 08 16

Hydrostatic level indicators 13–16

12

I

Immersion thermostats 380

Indoor siren AIS 10 113–114

Inner linings

- Fuel oil, diesel and biodiesel 55
- Liquid fertiliser AHL, AdBlue 56
- Mounting accessories 59
- Rainwater 57–58

Inner linings for tanks – mounting accessories 59

Inner tank linings for

- Fuel oil, diesel and biodiesel 55
- Liquid fertiliser AHL, AdBlue 56
- Rainwater 57–58

K

KH 1 – horn 84

KSG 160–161

L

LAG container 49

LAG mounting kit 49

LAG spare parts 54

LAG-13 KR 47

LAG-14 ER 48

LAS 24/39/72/230 46

LAZ spare parts 54

Leak detection fluid concentrate 49

Leak detectors

- Europress 60
- Eurovac NV/HV 50-52
- Fuel oil alarm unit HMS 74
- LAG 47-48
- LAS 46
- Liquid-based 46–48
- Oil/water alarm unit OM 5 71

Oil/water alarm unit ÖWWG 3 69–70

Vacuum 50–52

Leak detectors for systems with liquid in the interstitial space 46

Level alarm 18

Level controllers 18, 41

Level controls for emptying 41, 76

Level indicator for AdBlue 11

Level indicators for fuel oil

Hydrostatic 13–16

Mechanical 6–7

Pneumatic 8–12, 98

Level indicators for water

Hydrostatic 14–16

Pneumatic 8, 12, 98

Level probes DMU 08 16

Level probes for overfill prevention systems 39–40

Level sensor accessories 30

Level sensor chain 24

Level sensor chain with withdrawing system 26

Level sensor combinations 26, 29

Level sensor tester 35

Level sensors GWG 22–34

Level switches 18, 41

Liquid barrier 53

LS 300 – level probe 40

M

MAG connection kit 196

Manhole cover, plastic 295

Manifold systems for heating, cooling and geothermal systems 214–216

Maximelder-R 18

Measuring instruments, portable 398

Measuring units CAPBs® for BlueLine measuring instruments 396–401

Mechanical boiler water low level alarm 154

Mechanical level indicators 6–7

Mechanical water sensor 93

Metallised sleeve 27

Miniflex 130

Minimelder-R 18

Minimelder/Maximelder probe, EnOcean wireless 115

Mixing valve drinking water 285

Mixing valves heating circuit water 173

Mobile app AFRISOhome 116

Montagefix extension kit 10

Motorised boiler room vent Air-Control 152

Mounting accessories for inner linings 59

Mounting kits for

Fuel oil tank contents gauges 10

LAG 54

LAS 46

Mounting valves for quick air vents 158

MS, MSM 167

MSS 196

MSW 272

MT-Profil R 7

N

NB 220 H/QS 38

O

Oil filter spanners 146

Oil filters 137

Oil tank conversion kits for rainwater 295

Oil vents 139–145

Oil withdrawal systems 128–130

Oil-on-water detector ÖAWD-1/-8 73

Oil/water alarm unit OM 5 71

Oil/water alarm unit ÖWU 72

Oil/water alarm unit ÖWWG 3 69

Oil/water alarm unit with burner connection kit 70

Open end spanner for replaceable filter 146

Opticlean ultra-fine filters 138

Optimum service box 138

Overfill prevention systems 37

Overpressure device 126

Overpressure safety device 329

P

Paper filters Opticlean 138

Photoelectric probe 82

Pipe for dipstick 6

Piston type anti-siphon valve KAV 133

Plastic dipsticks 6

Plastic inner linings 55–58

Plastic manhole cover 295

Plastic quick air vents 161

Pneumatic level indicators 8–12, 98

Pneumofix 2 10

Pockets for thermometers 377

Pressure and temperature measuring instrument TDM 97

Pressure compensation unit DAE 131

Pressure gauges

- For heating installations 305–309
- For plant engineering 321
- Overpressure safety device 330
- Pressure gauges with capillary 310–320
- Pressure gauges with capillary tube 310–320
- Push-button stop cock 329
- Shut-off cocks and valves 327

Pressure gauges for heating installations 305–320

Pressure indicator for fuel oil filters 144

Pressure type leak detector 60

PrimoSol® – accessories 196–198

PrimoSol® – solar pump assemblies 193–195

PrimoTherm® – heating pump assemblies 177–192

PrimoVent quick air vents 157–159

Probes

- Conductivity 81
- ELT series 81

Float 73

Floor water 81

For alarm units 69, 81–82

Hydrostatic 13–15

Level 16

Minimelder/Maximelder 18

Photoelectric 71, 82

PTC thermistor 41, 82

RENA 297

Wall rail 81

WMS 154, 155

ProCalida® 214

Protective sleeve, metallised 27

PTC thermistor probe 82

Pull cord 131

Pump assemblies

For increased return temperature 183, 185, 191

Heating – PrimoTherm® 177–192

Solar – PrimoSol® 193–195

Push-button stop cock 329

Q

Quick air vents 157–159

Quick air vents for solar systems 197

R

Radiator control head, wireless 107–108

Radiator lockshield valves 237, 253

Radiator valves 232, 245, 249

Radiator valves for hydraulic balancing 232, 245

Radio-controlled water valve WaterControl 01 96

Rainwater harvesting accessories 295–297

Rainwater lining AR-SM 58

Reducers for

Level indicators 10

Level sensors 30

RENA – backup controller 297

Repeaters 113–115

Replaceable filter adapter 146

Resistance thermometers 389–392

Rocker switch, wireless 111

Room controller 199–213

Room temperature sensor D – wired 208

Room temperature sensors FT/FTF – wireless 104, 207

Room thermostats 209

RTL-Box 324 Vario 212–213

S

Sacrificial anodes 273–274

Safety group assembly 160–161

Safety group assembly for boilers 289

Safety temperature cut out 374

Safety valves 167, 196, 272

Screw connections 146

Screw fittings with measuring function Q 243

Sealing kit (IP 54) 49, 83

Sensor modules CAPBs® 396–401

Service instruments 394

Shut-off cocks for pressure gauges 327

Shut-off valves for pressure gauges 327

Signal anodes U 273

Signalling devices 84–85

Single room controller RTL-Box 324 Vario 212

Single room temperature controller CosiTherm® 199

Single room temperature controller, wireless 201

Single-line filters for fuel oil 137

Sintered plastic sieves 136, 138

Siphons 330

Siren for indoor spaces 113–114

Sludge separator 164–165

Smart Home system 89

Smoke alarm – wireless 99

Solar liquid . collector tank 198

Solar pump assemblies PrimoSol® 193–195

Solar thermal equipment 193–198

Spare parts for

- AFRISO Smart Home 115
- Boiler water low level alarm WMS 154–155
- Combined thermometer/pressure gauges/ thermometer-hydrometers 351
- Eurovac, Europress 54
- Fuel oil de-aerators 138, 144
- Fuel oil filters 138
- Handheld measuring instruments HMG series 230–231
- Leak detectors LAG, LAZ 54
- Replaceable filter cartridge for fuel oil filters 138

Spare thermowells 354, 358

Spare probes for

- ELT series 81
- Minimelder/Maximelder 18
- ÖAWD-8 81
- OM 5 71, 82
- ÖWWG 3 69, 82
- RENA 297
- WMS 2-1/3-1 155
- WWG 81

Stainless steel sieve for fuel oil 136, 138

Stainless steel sieve for water 272

Stainless steel thermometers 365

Strainers 272

Surface mount thermometers 355, 359

Surface mounting thermostats 378

Switch, wireless 111

T

Tank accessories 44–60, 124–130

Tank contents indicator DIT 10 13

Tank contents indicator DTA 10 12

Tank contents indicator DTA 20 E, wireless 98

Tank conversion kit for rainwater 295

Tank fittings 30

Tank protection package AK-S 55

Tank withdrawal systems 128–131

TankControl 10 14

TAS 03 – thermal safety valve 156

Temperature and pressure measuring instrument TDM 97

Temperature control thermostats 372, 376

Temperature controller CosiTherm® 199–206

Temperature limiters 374, 376

Test gas bag PGT 10 80

Test reports 420–424

Tester for safety equipment against siphoning 135

Thermal safety valve TAS 03 156

Thermometers

- Flue gas 355
- For air ducts 360
- For heating installations 352
- Industrial 360
- Industrial thermometers VMTh 370
- Stainless steel 365
- Surface 355
- With capillary tube 342–348

Thermometers for heating installations 342–354

Thermostat control head, wireless 107–108

Thermostat control heads 260–267

Thermostat valve bodies 232, 245, 249

Thermostat valve bodies with measuring function 232

Thermostatic actuators TSA 211

Thermostatic mixing valves ATM 282–285

Thermostats 378–388

Thermostats with housing 378–388

- Immersion thermostats with housing GTT 380
- Room thermostats with housing GRT 384
- Room thermostats with housing TA 03 209
- Surface mounting thermostats with housing GAT 378
- Thermostats with housing GTK with capillary tube 382
- Twin thermostats with housing GDT 386

Thermowells for thermometers 354, 358

Top filling system 25

TSA – actuators 211

Transducers

- For overfill prevention systems (WHG) 37–40
- LS 500 40
- NB 220 H/QS 38
- UFS 01 37

Type 76 A / AH level probe 39

U

UFS 01 37

Unimes 7

Unitel 8

Unitop 9

Unitop-Set AdBlue 11

Universal withdrawal system 26

V

Vacuum gauges for fuel oil filters 146

Vacuum type leak detectors 50–52

Valve bodies 232, 245, 249

Valves

- Anti-siphon 132–134
- Anti-tamper cap 166
- Check 271
- Differential pressure bypass 168
- Mounting 158
- Pressure gauge shut-off 327
- Radiator 232, 245, 249
- Safety 167, 196, 272
- Shut-off 129, 327

VarioQ 232–239

VarioQCalc 228

Vent caps 127

W

WAF 04 – water filter 290

Wall mounting rail probe WSS 81

Warning light with rotating reflector 85

WATCHDOG-LINE alarm units 64–68

Water alarm units

- OM 5 71
- ÖWU 72
- WWG 75

Water filters WAF 04 290

Water safety group assembly WSG 288

Water sensors

- Watersensor BWS 95
- Watersensor con 94
- Watersensor eco 93

Water tank contents gauge 8, 12, 98

Water valve, radio-controlled 96

WaterControl 01 96

Watersensor 93–95

Window contact AMC 20, wireless 112

Wireless actuators 107–108

Wireless control 101

Wireless gateway 117

Wireless module TCM 320 115

Wireless rocker switch FT4F-rw 111

Wireless room temperature sensor 104

Wireless standard EnOcean® 90

Wireless temperature control 101

Wireless transmitters, temperature/humidity 105

Wireless water sensors 92–95

Withdrawal systems 26, 128–130

Withdrawal with level sensor chain 26

WLAN gateway 117

Z

ZAG 86

Zigbee extension module 118

07/18/en

TANK EQUIPMENT
HEATING SYSTEM
ACCESSORIES
ALARM UNITS
SMART HOME
WATER TECHNOLOGY

Technology for environmental protection
Measuring. Controlling. Monitoring.

AFRISO

AFRISO-EURO-INDEX GmbH
Lindenstraße 20
74363 Güglingen
Germany

Phone +49 7135 102-0
Fax +49 7135 102-147

info@afriso.com
www.afriso.com

Service van EURO-INDEX

EURO-INDEX verleent service op alle meetinstrumenten uit haar leveringspakket en biedt de faciliteiten, kennis en hoog gekwalificeerd personeel voor (preventief) onderhoud, reparatie en kalibratie van uw meetinstrumenten.

Geautoriseerd Service Centrum

EURO-INDEX is van alle vertegenwoordigde merken een Geautoriseerd Service Centrum.

Dit betekent dat uw instrumenten worden behandeld door goed opgeleid en kundig personeel, dat beschikt over de juiste gereedschappen en software. Er worden uitsluitend originele onderdelen gebruikt en de garantie van uw instrument, evenals de certificering (ATEX, EN50379, etc.) blijven intact.

MEER INFO

Service- en kalibratielaboratorium

EURO-INDEX beschikt over een bijzonder modern service- en kalibratie-laboratorium met RvA accreditatie naar NEN-EN-ISO/IEC 17025. Deze accreditatie geldt voor verschillende grootheden, zoals gespecificeerd in de scope bij accreditatienummer K105.

MEER INFO

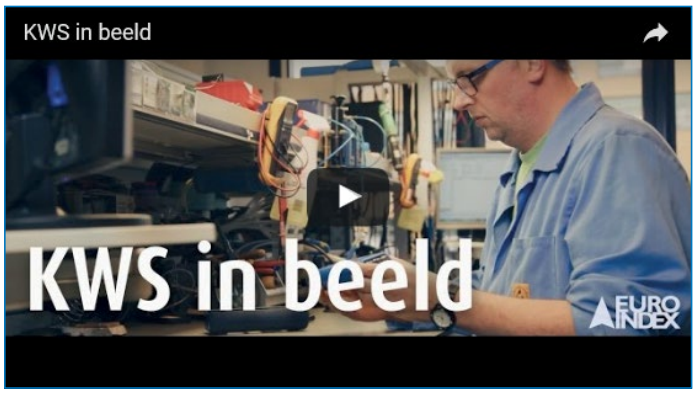

Bekijk de video op ons YouTube kanaal en ontdek alles over KWS

KWS®

KWS is een een uniek servicesysteem voor uw meetinstrumenten met periodiek onderhoud en kalibratie. Veel zaken worden voor u geregeld, zodat u zonder zorgen gebruik kunt maken van uw meetinstrumenten. De kosten zijn laag en voorspelbaar.

MEER INFO

Digitale toegang tot uw kalibratiecertificaten met Mijn KWS

Via het Mijn KWS webportal heeft u altijd en overal toegang tot uw kalibratiecertificaten en gerelateerde documenten.

MEER INFO

Verhuur van meetinstrumenten

- Uitgebreid assortiment
- Deskundig advies
- Instrumenten worden geleverd met accessoirepakket en herleidbaar kalibratiecertificaat

MEER INFO

EURO-INDEX Academy

- Producttrainingen (individueel en klassikaal)
- Seminars
- Demonstratie- en instructievideo's

MEER INFO

Servicebalie

Kalibratie rookgasanalyse

Seminars en workshops

Kalibratie thermografie

Wijzigingen voorbehouden EURO-INDEX® VL 18001

Het Bluetooth® woord- en beeldmerk zijn eigendom van Bluetooth SIG, Inc. Gebruik van deze merken door EURO-INDEX geschiedt onder licentie.

EURO INDEX

BELGIË
Leuvensesteenweg 607
1930 Zaventem
T: 02 - 757 92 44
F: 02 - 757 92 64
info@euro-index.be
www.euro-index.be

NEDERLAND
Rivium 2e straat 12
2909 LG Capelle a/d IJssel
T: +31 - (0)10 - 2 888 000
F: +31 - (0)10 - 2 888 010
verkoop@euro-index.nl
www.euro-index.nl

MANAGEMENTSYSTEEM CERTIFICATIE DNV·GL ISO 9001

KALIBRATIE RvA K 105
Geaccrediteerde scope zie www.rva.nl

WIJ LEIDEN VAKMENSEN OP
Erkend leerbedrijf